CHIEFTAIN 1700

OPERATIONS MANUAL

SUBJECT TO CHANGE WITHOUT PRIOR NOTICE
Original Instructions
© TEREX GB Ltd

ISSUE DATE: 19/07/2018
LANGUAGE: ENGLISH
REVISION: 3.4

PARTS MANUAL ON USB INSIDE FRONT COVER

POWERSCREEN®
A TEREX BRAND

www.powerscreen.com
Email: sales@powerscreen.com

200 Coalisland Road, Dungannon,
Co Tyrone, BT71 4DR, Northern Ireland
Tel: +44 (0) 28 87 718 500
Fax: +44 (0) 28 87 747 231

Serial Number	
Year of Construction	
Date of Delivery	
Dealer Stamp	
Notice	

Record of Revisions

Revision Number	Reason for Change	Date
1.0	New style and updated manual released	30-Aug-2011
2.0	New decals added in Chapter 4. Tier 4 Information added. Tipping grid remote also controls the vibrating grid if fitted. Deutz Engine Information removed. Fuel System Prime information added (Tier 3 CAT4.4 83KW Mechanical Engines) to Chapter 9	04-Jun-2012
2.1	Information on Roll-In Bogie added.	04/02/2013
2.2	Tier 4 Dual Power information added. General updates to manual.	10/12/2013
2.3	Maintenance Section updated - greasing points updated. Screen Unit maintenance updated. Tie Down points location added. Various general updates carried out. CAT 4.4 Tier 3 Constant Speed Engine information added.	01/10/2014
3.0	CAT 4.4 Tier 4 Final update.	24/02/2015
3.1	General Updates	16/11/2015
3.2	Fuel Save Information added. Extended Auxiliary Conveyor option added. Machine Tracking Directions update. Other General updates. Warranty Update.	03/11/2016
3.3	General Updates ANSI Classification updated Noise levels updated Tie Down Point Location Updated Magnetic option decal added Fire Hazard warning added Hot and Cold climate information added	20/10/2017
3.4	Magnet Exclusion Zones added. Magnet Decals added. Lockout and Tagout procedure updated. Maintenance Updated. Greasing Updated Schematics Updated California Proposition 65 Updated	19/07/2018

Intentionally Left Blank

Table of Content

1 Introduction 1-2
1.1 Notes to the Operations Manual 1-2
(1) Units 1-2
(2) Optional Equipment 1-3
1.2 Safety Information 1-3
(1) Safety Alert Symbol 1-3
(2) ANSI Hazard Classification System 1-3
(3) California Proposition 65 Warnings 1-4
1.3 Intended Use 1-4
1.4 Prohibited Use 1-4
1.5 Declaration of Conformity 1-4
1.6 Warranty 1-4
1.7 Copyright 1-5
1.8 Bulletin Distribution and Compliance 1-5
1.9 Contacting the Manufacturer 1-6
1.10 Transfer of Machine Ownership and Contacting Manufacturers 1-6
2 Safety 2-2
2.1 General Safety 2-2
(1) Safety Alert Symbol 2-2
(2) ANSI Hazard Classification System 2-2
(3) Property Damage Messages 2-3
(4) Description of Safety Symbols 2-3
2.2 Positions of Safety Signs on the Machine 2-8
2.3 Personal Safety 2-18
(1) Personal Protective Equipment 2-18
2.4 Work Area Safety 2-19
(1) General Work Area Guidelines 2-19
(2) Safety Warnings and Labels 2-19
(a) Modifications 2-19
(3) Transportation Safety 2-20
(4) Operation Safety 2-21
(5) Hydraulic and Pneumatic Safety 2-22
(6) Electrical Safety 2-23
(7) Maintenance Safety 2-24
(8) Gas, Dust, Steam, Smoke 2-26
(9) Hazardous Substances 2-26
(10) Noise Levels 2-26
(11) Fire Hazards 2-27
(12) Exclusion Zones 2-27
(a) Magnet 2-27
2.5 Emergency Stop Locations 2-29

3 Technical Data 3-3
3.1 General Information 3-3
(1) Machine Weights 3-3
3.2 Machine Component Specifications 3-3
(1) Feeder Unit 3-3
(a) Reject Grid 3-3
(b) Vibrating Grid 3-3
(c) Feed Hopper 3-3
(2) Screen Unit 3-4
(a) Screenbox 3-4
(b) Screen Meshes (available in a range of sizes) 3-4
(3) Main Conveyor 3-4
(4) Side Conveyors 3-4
(5) Tail Conveyor - DRY UNIT ONLY 3-4
(6) Auxiliary Conveyor 3 Deck Only 3-4
(a) Auxiliary Conveyor 3 Deck Only 3-4
(7) Power Unit 3-5
(a) Engine 3-5
(b) Electric Hydraulic Machine 3-5
(c) Battery 3-5
(8) Chassis 3-5
(a) Tyres 3-5
(b) Tracks 3-5
(9) Hydraulics 3-6
(a) Hoses 3-6
(10) Shredder Unit 3-6
(11) Catchbox - RINSER OPTION ONLY 3-6
(12) Washbox - RINSER OPTION ONLY 3-6
3.3 Machine Drawings 3-7
(1) 2 Deck Track Working Position 3-7
(2) 2 Deck Track Transport Position 3-8
(3) 2 Deck Track Vibrating Grid Working Position 3-9
(4) 2 Deck Track Vibrating Grid Transport Position 3-10
(5) 2 Deck Wheel Working Position 3-11
(6) 2 Deck Wheel Transport Position 3-12
(7) 2 Deck Wheel Vibrating Grid Working Position 3-13
(8) 2 Deck Wheel Vibrating Grid Transport Position 3-14
(9) 3 Deck Track Standard Length Auxiliary Conveyor Working Position 3-15
(10) 3 Deck Track Standard Length Auxiliary Conveyor Transport Position 3-16
(11) 3 Deck Track Extended Length Auxiliary Conveyor Working Position 3-17
(12) 3 Deck Track Extended Length Auxiliary Conveyor Transport Position 3-18
(13) 3 Deck Track Vibrating Grid Standard Length Auxiliary Conveyor Working Position 3-19
(14) 3 Deck Track Vibrating Grid Standard Length Auxiliary Conveyor Transport Position 3-20

(15) 3 Deck Track Vibrating Grid Extended Length Auxiliary Conveyor Working Position....3-21
(16) 3 Deck Track Vibrating Grid Extended Length Auxiliary Conveyor Transport Position....3-22
(17) 3 Deck Wheel Standard Length Auxiliary Conveyor Working Position....3-23
(18) 3 deck Wheel Standard Length Auxiliary Conveyor Transport Position ..3-24
(19) 3 Deck Wheel Vibrating Grid Standard Length Auxiliary Conveyor Working Position....3-25
(20) 3 Deck Wheel Double Deck Vibrating Grid Standard Length Auxiliary Conveyor Transport Position 3-26
(21) Work Area Required for Machine....3-27
3.4 Noise Levels....3-28

4 Machine Description.... 4-2

4.1 General Information....4-2
(1) Machine Identification Plate....4-2
(2) Machine References....4-3
4.2 Nomenclature and Technical Data 4-4
(1) Dry Option....4-4
(2) Rinser Option....4-5
4.3 Construction units....4-6
(1) Feeder Unit....4-6
(a) Reject Grid 4-7
(b) Remote Control Reject Tipping Grid 4-7
(c) The Vibrating Grid....4-8
(d) Feed Hopper....4-8
(e) Feeder Conveyor 4-9
(2) Main Conveyor....4-10
(3) Side Conveyors 4-10
(4) Auxiliary Conveyor....4-11
(a) Extended Auxiliary Conveyor 4-11
(5) Screen unit 4-12
(6) Tail conveyor....4-14
(7) Power Unit 4-14
4.4 Control and Display Elements....4-18
(1) MCU 300 Control Panel - Tier 4 4-18
(2) Tier 4 Dual Power....4-22
(a) Control Panel Component Identification 4-22
(3) Manual Tracking System 4-23
(4) Teleradio Radio Remote Tracking Kit 4-24
(5) MCU 200 Controller - Tier 3....4-25
(a) Overview 4-25
(b) Measurement Screens....4-26
(c) Alarm Management....4-28
(6) Duel Power (Tier 3)....4-30
(a) Control Panel Component Identification 4-30
(b) Control Panel Internal Component Identification 4-32

(7) Tier 3 (Including Constant Speed) 4-35
(a) Control Panel 4-35
(b) Manual Throttle 4-37
(c) Engine Pre-Heat - Standard Diesel Unit Only 4-39
(8) Tipping/Vibrating Grid Control Options 4-40
4.5 Telematics 4-42
4.6 Pictorial Decal Descriptions 4-43
(1) Machine Operations Decals 4-43
(2) Machine Information Decals 4-58
5 Transportation 5-2
5.1 Prior to Transportation 5-2
5.2 Putting the Machine into the Transport Position 5-3
(1) Retracting the Main Conveyor 5-4
(2) Lowering the Tail Conveyor 5-5
(3) Lowering the Screenbox 5-6
(4) Attaching Screen Anti-Rock Stays 5-7
(5) Maintenance Platform Retraction Instructions 5-8
(6) Folding in the Auxiliary Conveyor 5-10
(a) Folding the Extended Auxiliary Conveyor For Transport (Option) 5-14
(7) Close in the Side Conveyors 5-18
(8) Retracting the Tail Conveyor 5-20
5.3 Loading the Machine to the Low Loading Trailer (Track Machine) 5-21
(1) Prior to Haulage 5-21
(2) Ready for Transport 5-22
5.4 Removing Machine from the Low Loading Trailer (Track Machine) 5-23
(1) Radio Control 5-24
(2) Remote Control 5-26
5.5 Transport Tie Down Points 5-27
5.6 Removing Machine from the Prime Mover (Wheel Machine) 5-29
5.7 Attaching/Removing the Machine From the Roll In Bogie (Option) 5-31
(1) Attaching the Roll In Bogie (Option) 5-31
(2) Removing the Roll In Bogie (Option) 5-35
6 Initial Setup and Adjustments 6-2
6.1 Initial Inspection 6-2
6.2 Machine Location Considerations 6-3
6.3 Measures Before Set Up 6-3
6.4 Measures After Long Term Standstill 6-3
6.5 Putting the Machine into the Working Position 6-4
(1) Raising the Feeder into the Working Position (Wheel Machine) 6-5
(2) Lowering the Rear Support Legs (Track Machine) 6-7
(3) Opening Out the Side Conveyors 6-8
(4) Opening Out the Auxiliary Conveyor 6-10
(a) Extended Auxiliary Conveyor Mounting Instructions (Option) 6-14
(5) Attaching the Side Conveyor Paddles 6-19
(6) Lowering the Tail Conveyor (Head Section) 6-20

(7) Raising the Screenbox into Working Position 6-21
(8) Raising the Tail Conveyor into Working Position 6-22
(9) Positioning the Main Conveyor 6-23
(10) Adjusting the Spreader Plate 6-23
(11) Removing Screen Anti-Rock Stays 6-24
(12) Maintenance platform Setup Instructions 6-25

7 Standard Operating Procedures 7-3

7.1 Pre Operating Checks 7-3
7.2 Initial Startup 7-4
7.3 Standard Tier 3 and Tier 3 Constant Speed Engines 7-5
(1) Starting The Engine 7-5
(a) Starter Panel Indicators (C4.4) 7-7
(b) C4.4 Monitoring System 7-8
7.4 MCU 300 Machine Operation (Tier 4 Engine) 7-9
(1) Starting the Engine 7-9
(a) No Faults on the Display Screen 7-9
(b) Active Fault on the Display screen 7-13
(c) Fault Indicator Lamps 7-18
(d) Tier 4 Fuel Save Mode 7-20
7.5 Tier 4 Dual Power Machine Operation 7-22
(1) Diesel Mode Operation 7-22
(2) Electric Mode Operation 7-23
7.6 Tier 3 Dual Power Machine Operation 7-26
(1) MCU 200 Control Panel 7-26
(a) Display 7-27
(b) Mode 7-27
(c) Viewing Measured Data 7-27
(d) View and Edit Setpoints 7-27
(e) Changing the Display Contrast 7-28
(f) Changing Display Language 7-28
(g) Viewing Active Alarms 7-28
(h) ECU Alarm List 7-28
(i) Chart Guide to Menus and Pushbutton Operation 7-29
(j) Start – Stop Sequence 7-30
(k) History File 7-31
(2) Electric Mode Operation 7-32
(a) Pre-run Check 7-32
(b) Normal Start Procedure 7-33
(3) Diesel Mode Operation 7-34
7.7 Diesel Machine Operation 7-35
(1) Starting the Engine 7-35
(2) Tracking 7-36
(a) Radio Control 7-36
(b) Tracking Using the Hand-Held Remote Control Unit 7-37

(3) Controlling the Tipping/Vibrating Grid 7-38
(a) Setting the Grid Program 7-38
(b) Operating the Grid Manually 7-39
(c) Operating the Grid Using the Remote Control 7-39
(d) Programming a New Tipping/Vibrating Grid Remote Control 7-40
(e) Programming the Receiver 7-41
(f) Changing the Grid Remote Control Batteries 7-42
(4) Starting the Engine 7-43
7.8 Standard Operation 7-44
(1) Putting into Operation 7-44
(2) Screening 7-46
7.9 Radio Controlled Tipping/Vibrating Grid 7-47
(1) Manual Operation of the Tipping/Vibrating Grid 7-47
(2) Radio Operation of the Tipping/Vibrating Grid 7-48
(a) Using a Pre-Stored Programmed Sequence 7-48
(b) Using the Up/Down Sequence Override Buttons 7-49
(c) Setting a New Programmed Sequence 7-49
(d) Programming a New Transmitter to an Existing Receiver 7-50
7.10 Operating the Reject Grid 7-52
(1) Raising the Reject Grid 7-52
(2) Lowering the Reject Grid 7-52
7.11 Operating the Shredder 7-53
(1) Raising the Shredder 7-53
(2) Lowering the Shredder 7-53
7.12 Manoeuvring 7-54
(1) Undercarriage 7-54
(2) Tracking the Machine 7-55
(3) Machine Tracking Directions 7-56
(4) Tracking 7-57
(a) Manual Tracking with the Umbilical Handset 7-57
(b) Radio Tracking with the Teleradio Remote Control 7-58
(c) Fast Tracking 7-59
(d) Fast Tracking - Constant Speed Engine 7-59
7.13 Machine Shutdown 7-60
(1) Stopping the Machine 7-60
(2) Tier 4 Final Machine Shutdown 7-61
(3) Tier 3 Constant Speed Shutdown 7-63
(4) Tier 3 Diesel Machine Shutdown 7-63
(5) Tier 3 Dual Power machine shutdown 7-64
(a) Diesel Mode 7-64
(b) Electrical Mains Power Mode: 7-64
(6) Electric Hydraulic Machine Shutdown 7-65

8 Emergency Operating Procedures 8-2
8.1 Lockout and Tagout 8-2
(1) Before Carrying out any Work on the Machine 8-2
(2) After Carrying out any Work on the Machine 8-4
8.2 Emergency Stop 8-5
(1) Emergency Stop Locations 8-6
8.3 Restarting after Emergency Stop 8-7
8.4 Testing Emergency Stops 8-7
9 Maintenance 9-4
9.1 Safety Before and During Maintenance 9-4
9.2 Regular Servicing 9-6
9.3 Non Scheduled Maintenance 9-7
(1) Air Cleaner Elements 9-7
(2) Tracks 9-7
(3) Control Systems 9-7
9.4 Maintenance Schedule 9-8
9.5 Service Schedule 9-12
9.6 Lubrication 9-15
(1) Recommended Lubricants 9-16
(2) Capacities - Fluid 9-19
(3) Greasing Schedule 9-20
9.7 Feeder Unit Maintenance 9-21
(1) Clean and Check the Conveyor Belt 9-21
(2) Tensioning the Feeder Conveyor Belt 9-22
(3) Feeder Conveyor Alignment 9-23
(4) Changing the Feed Conveyor Gearbox Oil 9-24
9.8 Screen Unit Maintenance 9-25
(1) Checking Screen Drive Belt Tension 9-25
(2) Tensioning the Screen Drive Belt 9-27
(3) Changing the Screen Mesh 9-28
(4) Re-Tuning the Screen Unit 9-32
(5) Snubber Rubber Maintenance 9-32
9.9 Conveyor Maintenance 9-34
(1) Clean and Check the Conveyor Belt 9-34
(2) Belt Tracking 9-35
(3) Tensioning Conveyor Belts 9-36
(4) Conveyor Alignment 9-37
9.10 Hydraulic System 9-38
(1) General 9-38
(2) Oil Tank, Pipes & Fittings 9-39
(3) Hydraulic Fluids 9-39
(a) Check Hydraulic Oil Level 9-41
(b) Adding Hydraulic Fluid 9-42
(c) Change Hydraulic Oil 9-42
(d) Changing Suction Filters 9-44
(e) Checking the Return Line Filter 9-46

(f) Changing the Return Line Filter 9-47
9.11 Hydraulic Ram Maintenance 9-48
9.12 Tier 3 and Constant Speed Engine Maintenance 9-49
(1) Changing Engine Filters & Oil 9-50
(a) Checking Engine Oil 9-50
(b) Changing Engine Oil & Filter 9-51
(2) Changing Fuel Filters 9-52
(a) Draining the Fuel Filter Water Trap 9-52
(b) Changing Watertrap Filter 9-53
(c) Changing the Fuel Filters 9-54
9.13 Tier 4 Engine Maintenance 9-55
(1) Changing Engine Oil & Filters 9-56
(a) Checking Engine Oil 9-56
(b) Changing Engine Oil & Filter 9-57
(2) Changing Fuel Filters 9-58
(a) Draining the Fuel Filter Water Trap 9-58
(b) Changing Watertrap Filter 9-59
(c) Changing the Fuel Filters 9-60
(3) Servicing The DEF (Diesel Exhaust Fluid) System 9-61
(a) DEF Tank Location 9-61
(b) Changing the Pump Main Filter 9-62
(c) Changing the DEF Tank Filler Screen 9-63
(d) Changing the DEF Manifold Filter 9-64
(e) DEF Tank Flush 9-66
(f) Filling the DEF Tank 9-67
9.14 Inspecting the Clean Emissions Module Supports 9-69
9.15 Changing Air Filters 9-70
(1) Air Filtration 9-70
(2) Check Both Air Cleaner Elements 9-70
(3) Changing the Air Cleaner Elements 9-71
9.16 Coolant System 9-72
(a) Engine Coolant Level 9-72
(1) Topping up Coolant Level 9-73
9.17 Priming the Fuel System 9-74
(1) Electric Fuel Pump Priming 9-74
(2) Manual Fuel Pump Priming 9-75
(3) Fuel System Prime (Tier 3 CAT4.4 83KW Mechanical Engines) 9-76
9.18 Fuel Level and Topup 9-78
9.19 Track Maintenance 9-80
(1) Machine Tracks 9-82
(2) Cleaning the Tracks 9-82
(3) Measuring Track Tension 9-83
(4) Adjusting Track Tension 9-84
(5) Checking and Filling the Gearbox Oil Level 9-85
(a) Draining Gearbox Oil 9-86
(b) Refilling the Track Gearbox Oil 9-87

(c) Changing Track Gearbox Oil....9-88
9.20 Electrical Maintenance....9-89
(1) Electrical Safety instructions....9-89
(2) Check the Battery....9-90
(3) Battery Removal....9-91
(4) Battery Installation....9-91
(5) Changing Fuses....9-92
10 Troubleshooting....10-2
10.1 General Troubleshooting....10-2
10.2 Conveyors Troubleshooting....10-3
10.3 Screen Troubleshooting....10-4
10.4 Components Troubleshooting....10-6
10.5 Hydraulic Troubleshooting....10-7
10.6 Production Troubleshooting....10-8
10.7 Tracks Troubleshooting....10-9
10.8 Electrical Troubleshooting....10-11
10.9 Engine Troubleshooting....10-13
10.10 Engine Fault Codes....10-20
10.11 Machine Fault Codes and Descriptions....10-31
11 Storage....11-2
12 Glossary of Terms....12-1
Appendix A EC Declaration of Conformity....A-1
Appendix B Warranty....B-1
Appendix C Schematics....C-2
(1) MCU 200 Rear Connections....C-2
(2) Basic Wiring of MCU 200....C-2
(3) Tier 3 Schematics....C-3
(4) Tier 4 Schematics....C-5
(5) Dual Power Schematics....C-7
(6) Hydraulic Diagrams....C-9
(a) Tier 3 - 2 Deck Schematics....C-9
(b) Tier 3 - 3 Deck Schematics....C-10
(c) Tier 4 - 2 Deck Schematics....C-11
(d) Tier 4 - 3 Deck Schematics....C-12
(e) Constant Speed 2 Deck Schematics....C-13
(f) Constant Speed 3 Deck Schematics....C-14
(g) Tier 3 Dual Power 2 Deck Tipping Grid Schematics....C-15
(h) Tier 3 Dual Power 3 Deck Tipping Grid Schematics....C-16
(i) Tier 4 Dual Power 2 Deck Tipping Grid Schematics....C-17
(j) Tier 4 Dual Power 3 Deck Hydraulic Auxiliary Conveyor Tipping Grid Schematics....C-18

Intentionally Left Blank

Table of Content

1 Introduction 1-2
1.1 Notes to the Operations Manual 1-2
(1) Units 1-2
(2) Optional Equipment 1-3
1.2 Safety Information 1-3
(1) Safety Alert Symbol 1-3
(2) ANSI Hazard Classification System 1-3
(3) California Proposition 65 Warnings 1-4
1.3 Intended Use 1-4
1.4 Prohibited Use 1-4
1.5 Declaration of Conformity 1-4
1.6 Warranty 1-4
1.7 Copyright 1-5
1.8 Bulletin Distribution and Compliance 1-5
1.9 Contacting the Manufacturer 1-6
1.10 Transfer of Machine Ownership and Contacting Manufacturers 1-6

1 Introduction

1.1 Notes to the Operations Manual

This operations manual contains important information on how to operate the machine safely and correctly. Read this manual carefully to learn how to operate your machine. Failure to do so could result in personal injury or equipment damage. Consider this manual a permanent part of your machine. Keep it with the machine at all times.

There is a separate engine manufacturer's manual which should also be read and understood prior to any operation or maintenance of the machine.

The following procedure bar indicates the start of a procedure. Any safety warnings related to the procedure will be highlighted before the procedure.

PROCEDURE

Any results from a step in the procedure will be indicated in italic below that step. The end of a procedure is indicated with a line under the last step or the last image in a procedure.

Follow all applicable safety regulations and recommendations in this manual as appropriate to your machine and the situation/conditions prevailing at the time.

Federal, State, National and Local laws and safety regulations must be complied with at all times to prevent possible danger to person(s) or property from accidents or harmful exposure.

Where supplied as a basic machine only, (with or without optional extras, e.g. drive elements, etc.), the machine is intended for incorporation into a complete processing machine that is NOT designed and/or constructed by Terex. In these circumstances, or where supplied as a replacement machine, Terex will NOT be responsible for addressing environmental issues and/or health and safety protection measures for the machine installation as a whole and will bear NO responsibility for ensuring compliance with any regulations and/or statutory requirements that may apply unless specifically included in the Contract of Sale.

INFORMATION AND ADVICE

If you need any information or advice regarding your machine please contact:

Terex Powerscreen

200 Coalisland Road

Dungannon, Co. Tyrone

BT71 4DR

Telephone: +44 (0) 28 8774 0701

E mail: aftersales@powerscreen.com

(1) Units

Within this operations Manual figures shown within brackets ( ) after the Metric unit of measure are approximate conversions from the actual metric measurement of the item concerned to the imperial measurement.

(2) Optional Equipment

Terex machines can include optional equipment and/or special features additional to the standard specification. These may affect the information given in this operations manual. Refer to Chapter 4 of the operations manual for extra equipment or variations that can be applicable to the standard specification. Take note of any variations to the standard procedures and/or component specifications.

1.2 Safety Information

(1) Safety Alert Symbol

The safety alert symbol is used on safety signs and throughout this manual to alert you to potential personal injury hazards. Obey all messages that follow this symbol to avoid injury or death.

Conduct thorough risk assessments and mitigate identified risks in accordance to the assessment. For more information related to machine safety, please refer to the safety section of the manual (Chapter 2).

(2) ANSI Hazard Classification System

A multi-tier hazard classification system is used to alert you to potential personal injury hazards. Signal words used with the safety alert symbol indicate a specific level of severity of the potential hazard. Signal words used without the safety alert symbol relate to property damage and protection only. All are used as attention-getting devices throughout this manual as well as on ANSI type decals and labels fixed to the machine.

⚠ DANGER

DANGER Indicates a hazardous situation that, if not avoided, will result in death or serious injury. (Contains white letters on red background).

⚠ WARNING

WARNING This indicates a hazardous situation that, if not avoided, could result in death or serious injury. (Contains black letters on orange background).

⚠ CAUTION

CAUTION This indicates a hazardous situation which, if not avoided, could result in minor or moderate injury. (Contains black letters on yellow background).

The hazards associated with each procedure will be listed before each procedure as described.

(3) California Proposition 65 Warnings

⚠ WARNING

Operating, servicing and maintaining this equipment can expose you to chemicals including engine exhaust, carbon monoxide, phthalates, and lead, which are known to the State of California to cause cancer and birth defects or other reproductive harm. These chemicals can be emitted from or contained in other various parts and systems, fluids and some component wear by-products. To minimize exposure, avoid breathing exhaust, do not idle the engine except as necessary, service your equipment and vehicle in a well-ventilated area and wear gloves or wash your hands frequently when servicing your equipment or vehicle and after operation. For more information go to www.P65Warnings.ca.gov/ passenger-vehicle.

1.3 Intended Use

This product and its approved attachments are designed to be used in Material Processing crushing and screening applications. Compliance with the operating instructions, the performance of maintenance work as specified and adherence to maintenance intervals are all aspects of proper use. Use of this product in any other way is prohibited and contrary to its intended use.

1.4 Prohibited Use

Operating the machine outside of its recommended range of applications or for any use which it is not intended, will result in a loss of any guarantee. The manufacturer or supplier cannot be held liable for any damage or injury resulting from such misuse.

Use of this product in any way other than its intended use is prohibited. The manufacturer will not be liable for any damage resulting from such use.

1.5 Declaration of Conformity

This machine is in conformity with the provisions of the EC Machinery Directive 2006/42/EC together with appropriate EN Harmonised Standards and National BS Standards and Specifications.

A Declaration of Conformity certificate is applicable to each machine. Refer to Appendix A for an example of a Declaration of Conformity certificate. The original copy of the certificate is sent out with the machine.

1.6 Warranty

Refer to Appendix B for an example of the warranty. It is important that it is read and fully understood.

1.7 Copyright

The copyright of this operations manual is reserved by Powerscreen.

This operations manual contains information and technical drawings, which may not be copied, distributed, altered, stored on electronic media, revealed to others or used for the purpose of competition, either partially or in its entirety.

The right is reserved to alter any details contained in this manual without notice.

Copyright 2018.

Terex Powerscreen

200 Coalisland Road

Dungannon, Co. Tyrone

BT71 4DR

Telephone: +44 (0) 28 8774 0701

E mail: aftersales@powerscreen.com

To order additional copies contact your local Powerscreen dealer.

1.8 Bulletin Distribution and Compliance

Safety of product users is of paramount importance to Terex. Various bulletins are used by Terex to communicate important safety and product information to dealers and machine owners. The information contained in bulletins is tied to specific machines using the machine model and serial numbers. Distribution of bulletins is based on the most current owner on record along with their associated dealer, so it is important to register your machine and keep your contact information up to date. To provide for the safety of personnel and the reliable continued operation of your machine, be sure to comply with actions indicated in all safety and product notices.

1.9 Contacting the Manufacturer

At times it may be necessary to contact the manufacturer of this machine. When you do, be ready to supply the model number and PIN number of your machine, along with your name and contact information. At minimum, the manufacturer should be contacted for any of the following reasons:

- Accident reporting
- Questions regarding product applications and safety
- Standards and regulations compliance information
- Questions regarding product modifications
- Current owner updates, such as changes in machine ownership or changes in your contact information (See Transfer of Machine Ownership).

Please contact:

Terex Powerscreen

200 Coalisland Road

Dungannon, Co. Tyrone

BT71 4DR

Telephone: +44 (0) 28 8774 0701

E mail: aftersales@powerscreen.com

1.10 Transfer of Machine Ownership and Contacting Manufacturers

If you are not the original owner of this machine, provide the model number and PIN number of your machine. Also include your name and the date of the transfer of ownership. It ensures that you are the owner on record for this machine, allowing you to receive any applicable notices and advisories in a timely manner.

Table of Content

2 Safety 2-2
2.1 General Safety 2-2
(1) Safety Alert Symbol 2-2
(2) ANSI Hazard Classification System 2-2
(3) Property Damage Messages 2-3
(4) Description of Safety Symbols 2-3
2.2 Positions of Safety Signs on the Machine 2-8
2.3 Personal Safety 2-18
(1) Personal Protective Equipment 2-18
2.4 Work Area Safety 2-19
(1) General Work Area Guidelines 2-19
(2) Safety Warnings and Labels 2-19
(a) Modifications 2-19
(3) Transportation Safety 2-20
(4) Operation Safety 2-21
(5) Hydraulic and Pneumatic Safety 2-22
(6) Electrical Safety 2-23
(7) Maintenance Safety 2-24
(8) Gas, Dust, Steam, Smoke 2-26
(9) Hazardous Substances 2-26
(10) Noise Levels 2-26
(11) Fire Hazards 2-27
(12) Exclusion Zones 2-27
(a) Magnet 2-27
2.5 Emergency Stop Locations 2-29

2 Safety

This safety section covers a wide variety of hazardous situations, (but not necessarily limited to those described), which may or may not apply to any specific machine installation. They are given for general guidance only to assist the operator in setting up and maintaining an appropriate regime for the protection of health and safety. Where the machine is supplied for incorporation into plant/equipment designed, supplied and located by others, Terex cannot be aware of particular hazards that may be present or might occur and therefore accept no liability for addressing or resolving these issues.

2.1 General Safety

The following signs and designations are used in the manual to designate instructions of particular importance.

(1) Safety Alert Symbol

The safety alert symbol is used on safety signs and throughout this manual to alert you to potential personal injury hazards. Obey all messages that follow this symbol to avoid injury or death.

Conduct thorough risk assessments and mitigate identified risks in accordance to the assessment.

(2) ANSI Hazard Classification System

A multi-tier hazard classification system is used to alert you to potential personal injury hazards. Signal words used with the safety alert symbol indicate a specific level of severity of the potential hazard. Signal words used without the safety alert symbol relate to property damage and protection only. All are used as attention-getting devices throughout this manual as well as on ANSI type decals and labels fixed to the machine.

⚠ DANGER

DANGER Indicates a hazardous situation that, if not avoided, will result in death or serious injury. (Contains white letters on red background).

⚠ WARNING

WARNING This indicates a hazardous situation that, if not avoided, could result in death or serious injury. (Contains black letters on orange background).

⚠ CAUTION

CAUTION This indicates a hazardous situation which, if not avoided, could result in minor or moderate injury. (Contains black letters on yellow background).

The hazards associated with each procedure will be listed before each procedure as described

(3) Property Damage Messages

The signal word NOTICE, shown without the safety alert symbol, is used throughout this manual and on machine labels to address specific practices, or draw attention to supplemental information that is not related to personal injury.

NOTICE

This indicates information considered important, but not hazard related. This is a message related to property damage. The safety alert symbol is not shown with this danger classification.

(4) Description of Safety Symbols

Table 2.1 - Description of Safety Symbols

Symbol	Description
	Electrocution hazard Electrical shock/ electrocution from conveyor to power line contact.
	Stay sufficient distances from electrical power lines.
	Entanglement hazard Entanglement in belt drive or conveyor.
	Entanglement hazard Arm entanglement in belt drive.
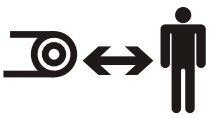	Stay clear of conveyor.
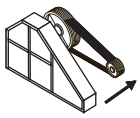	Install covers and guards before operation.
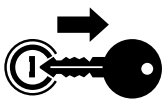	Turn machine off and remove the key.
	Lockout machine.
	Read and understand operations manual before using equipment.

Symbol	Description
	Injection hazard Skin injection from high pressure fluid.
	Use cardboard or wood to check for leaks.
	Crush hazard Crushed foot from support leg.
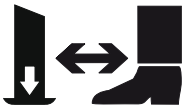	Stay clear of support legs and jacks.
	Falling material hazard Struck from falling or flying material.
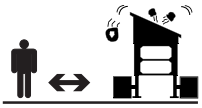	Stay clear of hopper during operation.
	Fall Hazard Falling from a height.
	Do not climb onto the machine.
	Use personnel lift to reach high places.
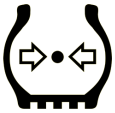	Check tyre pressures prior to transport.
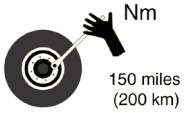	Check wheel nut torque. Recheck wheel nut torque every 150 miles (200km).
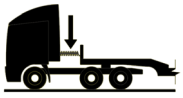	Connect and check braking system.
	Crush hazard Crushing of fingers or hand. Force applied in one direction.

Symbol	Description
	Keep hands clear of openings.
	Hand entanglement in pulley/ winch
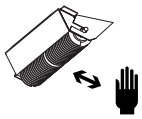	Keep hands clear of moving components
	Electrocution hazard Electric shock/ electrocution.
	Hearing hazard Loss or degradation of hearing.
	Wear hearing personal protective equipment.
	Explosion hazard Explosion during an operation or service procedure.
	Burn hazard Burns from corrosive material.
	Keep open flame away.
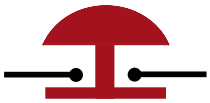	**Emergency Stop** Press to engage, twist to reset.
	Flying Material Hazard Face struck by flying objects
	Wear eye personal protective equipment
	Crush Hazard Crush from overhead impact.

Symbol	Description
	Stay clear of moving conveyors.
	Unauthorized persons prohibited.
	Flying Material Hazard Struck by flying material.
	Do not stand on platform while machine is in operation
	Do not stand on machine while in operation.
	Inhalation Hazard Inhalation of poisonous/ toxic fumes or dust.
	Use dust suppression (water spray) or dust collection (filter) during operation of this equipment.
	Wear respiratory personal protective equipment.
	Cutting Hazard Contact with knives in trommel drum will result in death or serious injury.
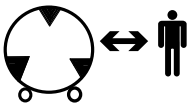	Stay clear of sharp knives in trommel drum.
	Crush Hazard Crush from track machine run over.
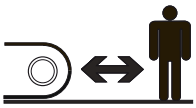	Stay clear of track machine.
	Crush Hazard Crush from wheel machine run over.

Symbol	Description
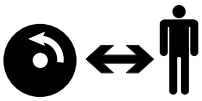	Stay clear of wheeled machine.
	Explosion Hazard Battery Explosion.
	Keep welding sparks away from the battery area.
	Burn Hazard Burn from hot surface or liquid
	Stay clear of hot surface or liquid.
	Impact Hazard Impact from spring loaded door.
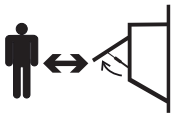	Stay clear of spring loaded door while opening.
	Magnetic Hazard Magnetic fields can disturb pacemaker operation if within 3 metres of the magnet and result in serious injury or death to pacemaker wearer. Keep from magnet
	Maintenance Hazard Switch off and lockout all energy sources prior to performing maintenance or adjustments.

2.2 Positions of Safety Signs on the Machine

The table lists the safety signs that are on this machine. The item number indicates the position of the safety sign on the machine.

Table 2.2 - Safety Signs

Item	Sign	
	ISO	ANSI
1502	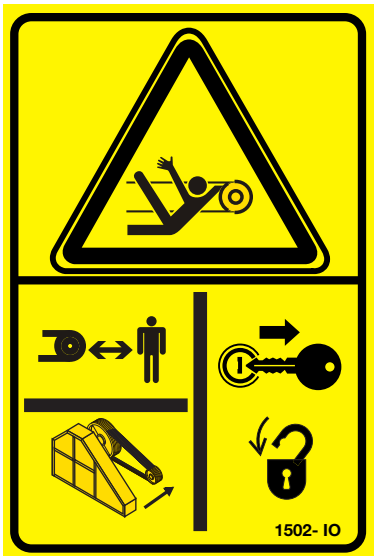	
1507		

Item	Sign	
	ISO	ANSI
1500	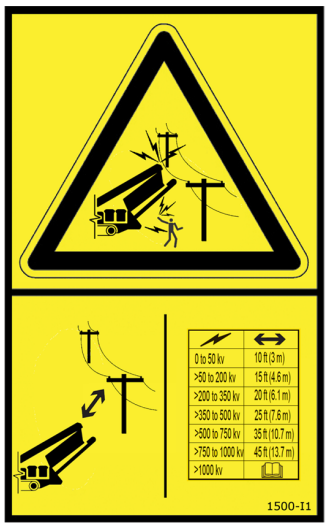	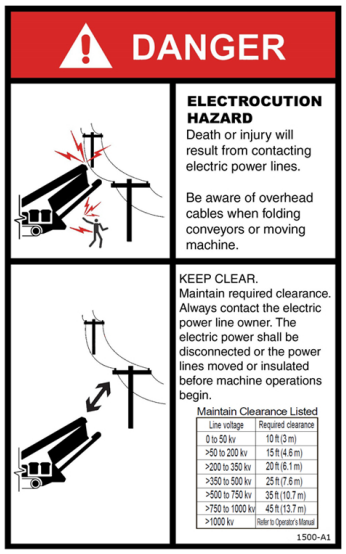
1521		
1515	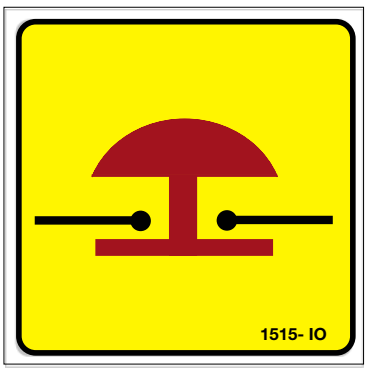	

Item	Sign	
	ISO	ANSI
1508		
1518		
1522		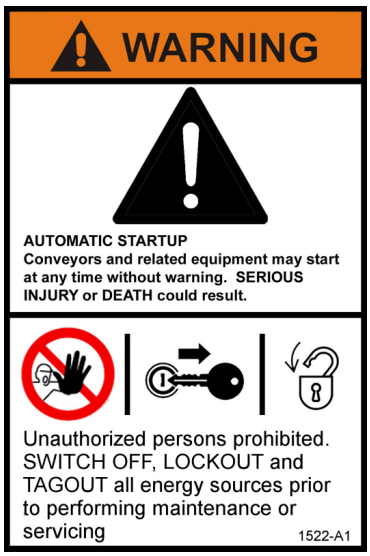

Item	Sign	
	ISO	ANSI
1523		
1533	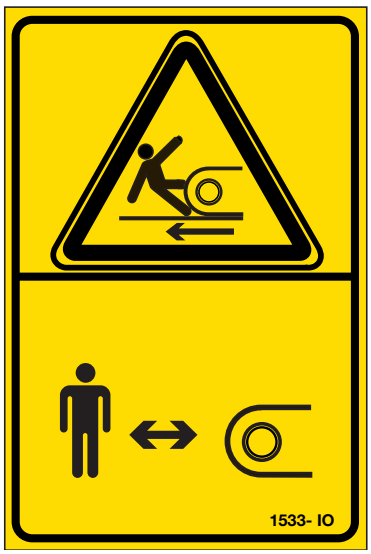	
1503	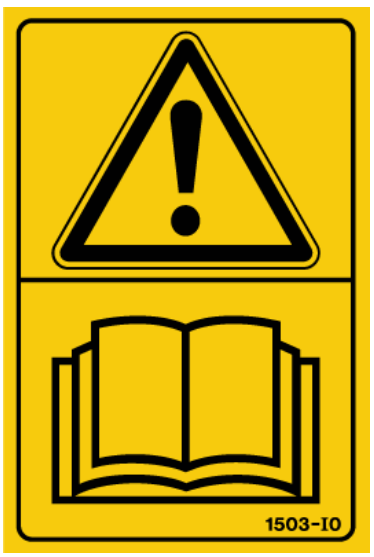	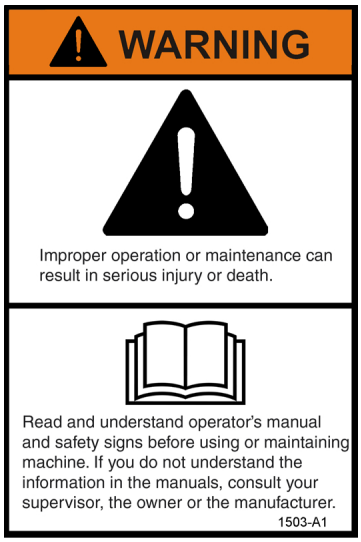

Item	Sign	
	ISO	ANSI
1504		
1532		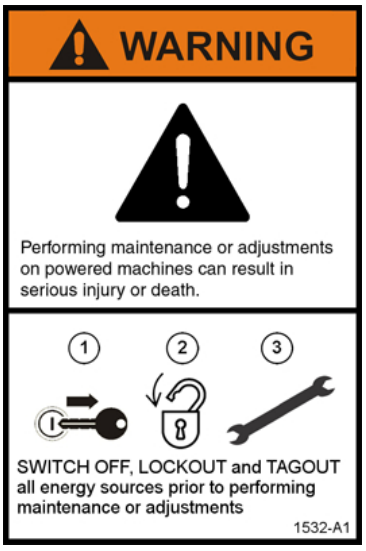
1524		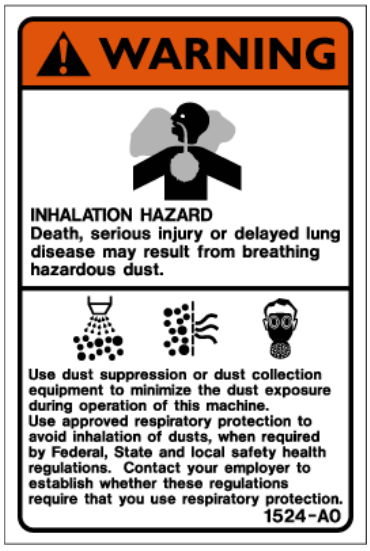

Item	Sign	
	ISO	ANSI
1520	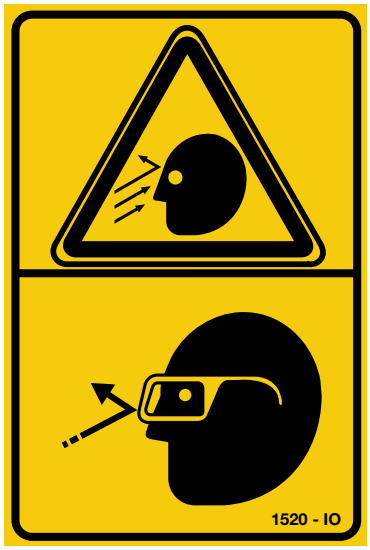	
1513		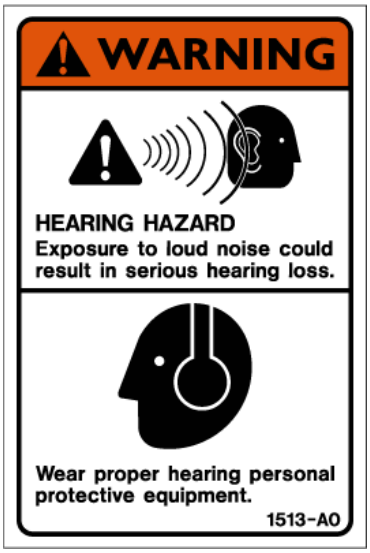
1506	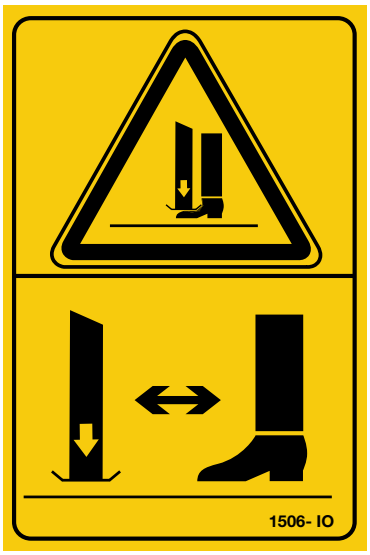	

Item	Sign	
	ISO	ANSI
1531	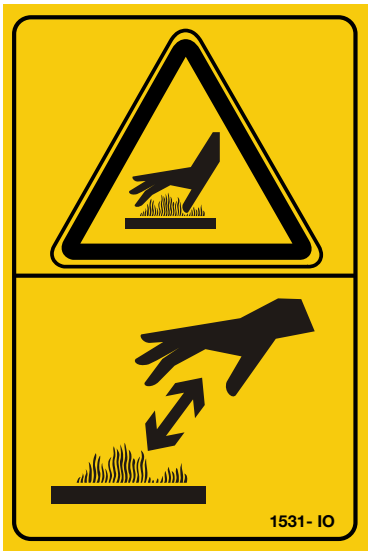	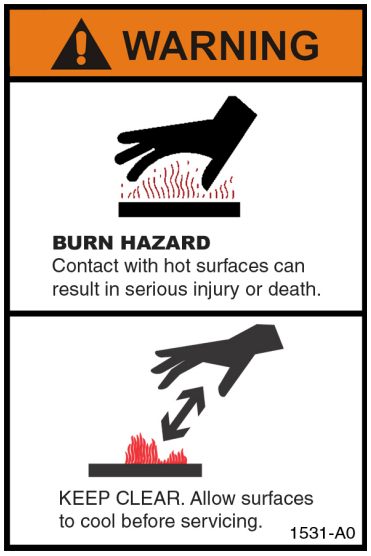
1530	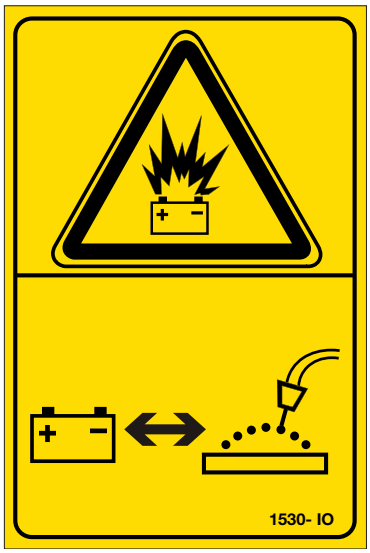	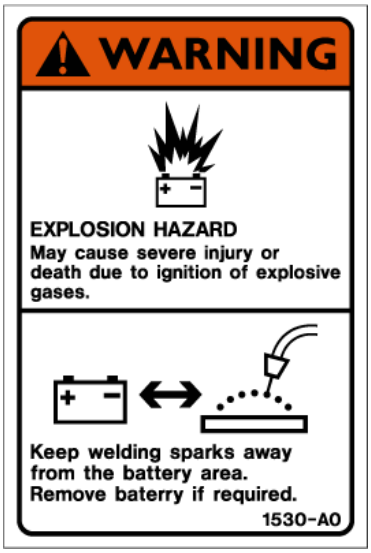
1514		

Item	Sign	
	ISO	ANSI
1562		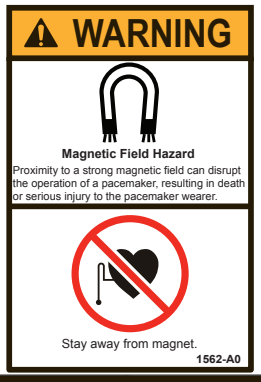
1584	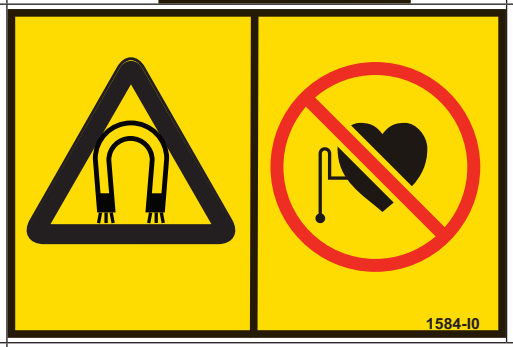	
	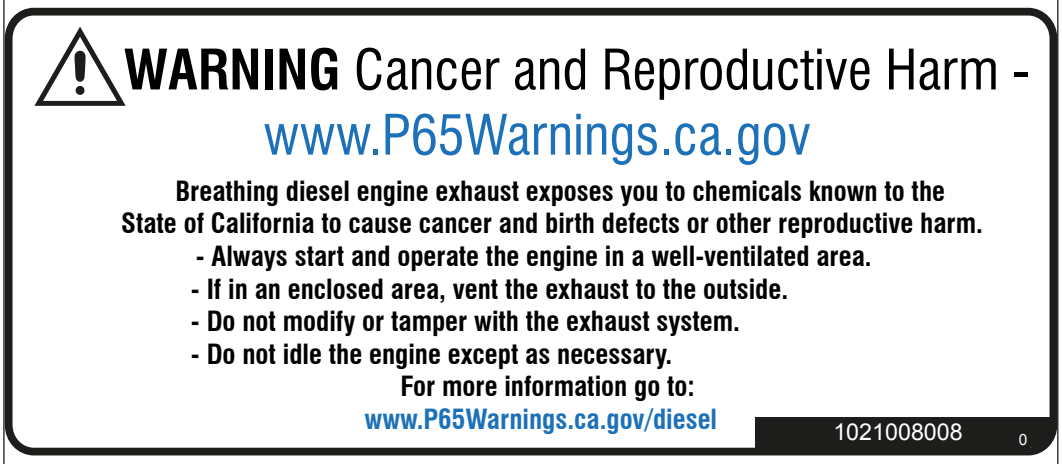	

Figure 2.1 to Figure 2.3 show the positions of these safety signs on the machine.

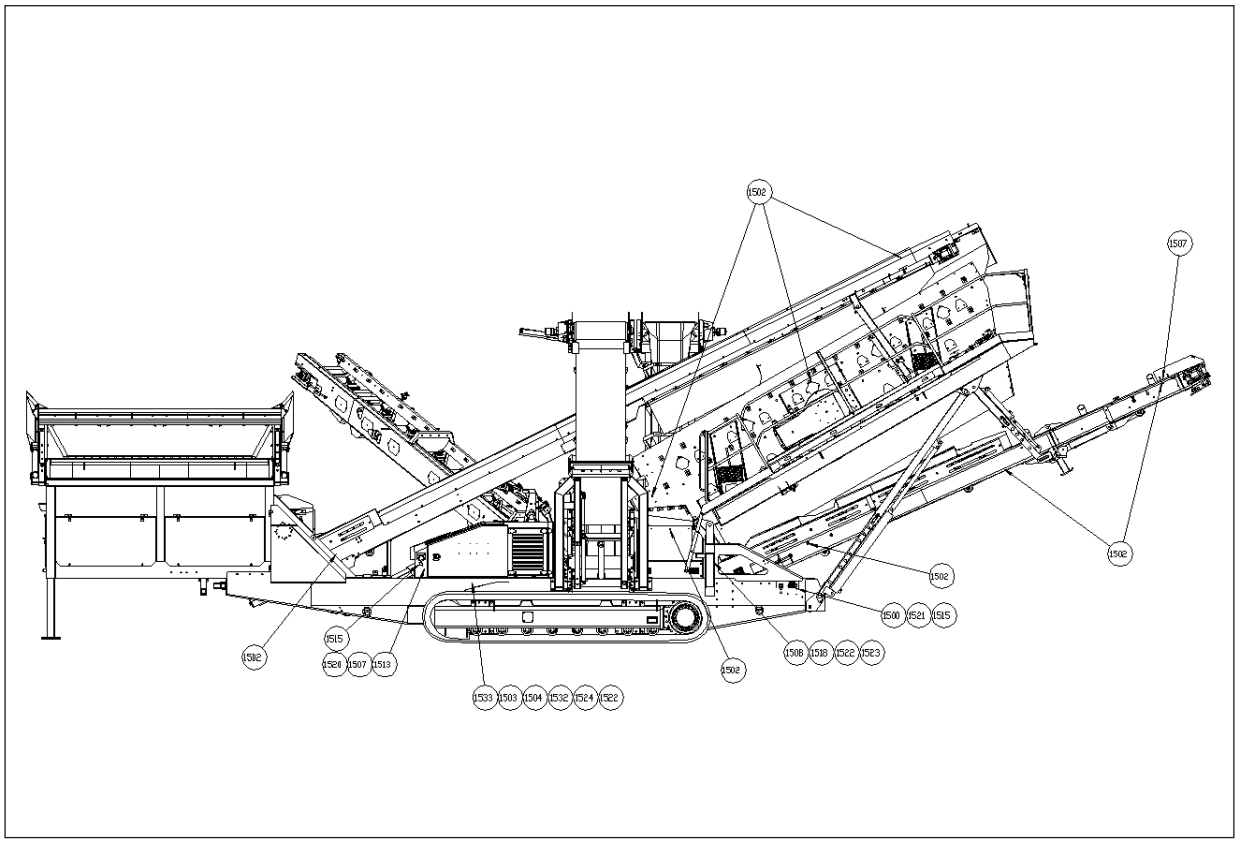

Figure 2.1 - Right Hand Side Safety Sign Positions

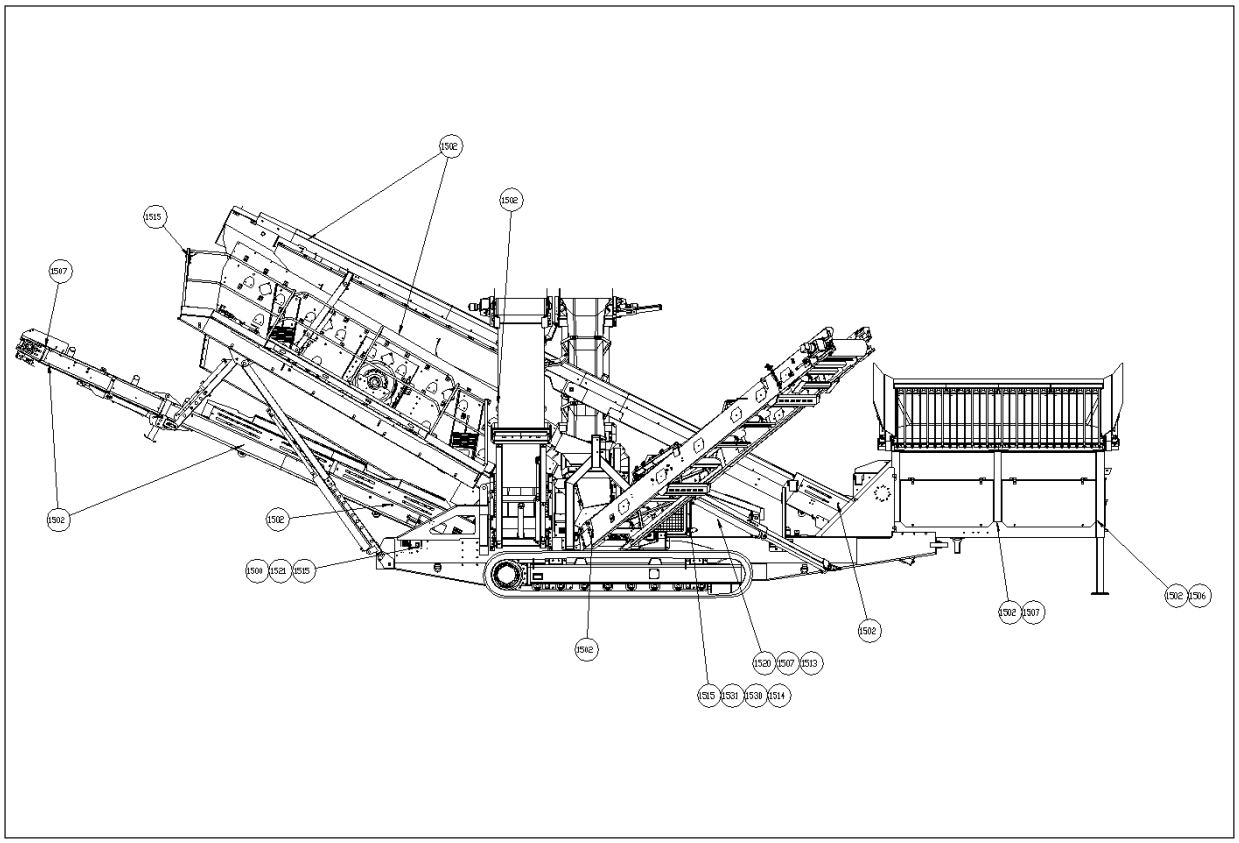

Figure 2.2 - Left Hand Side Safety Sign Positions

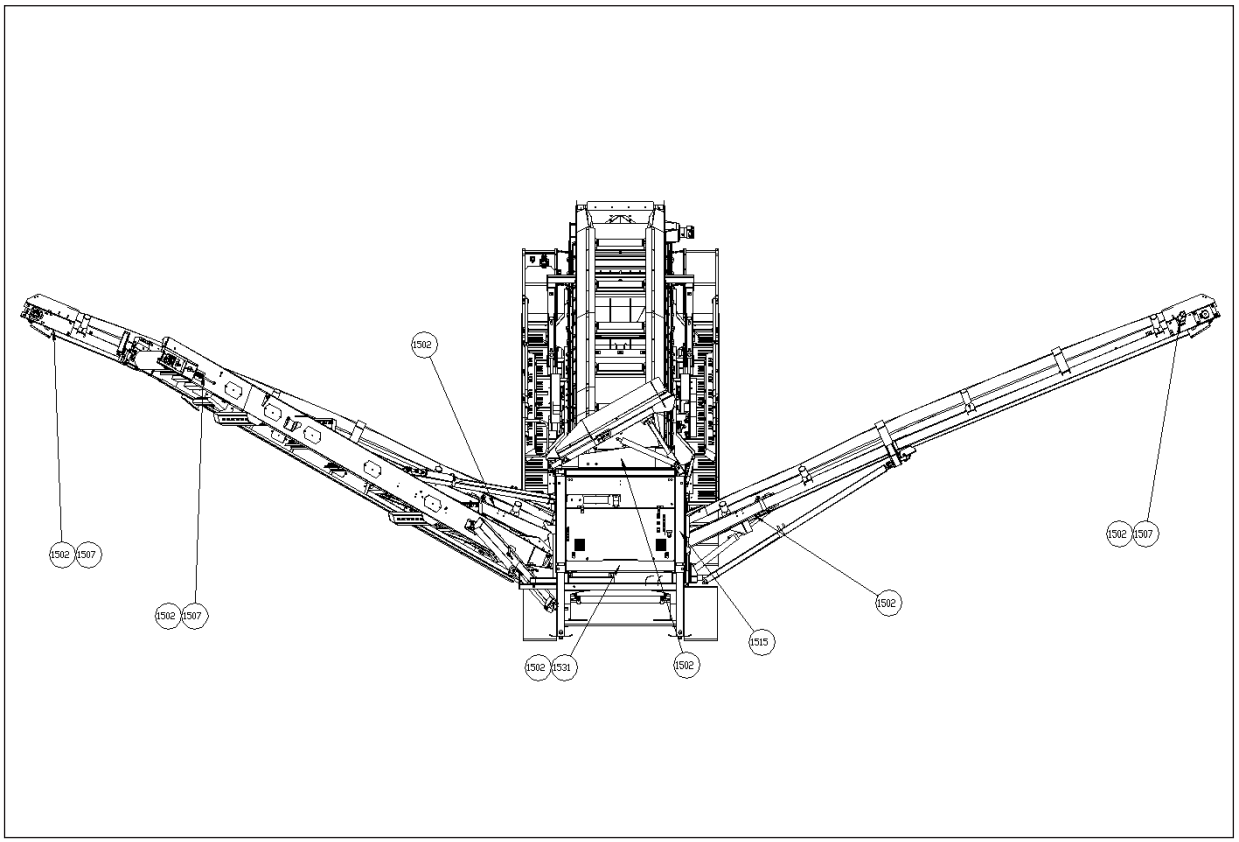

Figure 2.3 - Rear Safety Sign Positions

2.3 Personal Safety

Ascertain from the appropriate authority and observe all statutory and any other regulations that may apply to the planned location before operating the machine. Operators must be trained in the correct and safe use of all equipment.

Before operation the operator(s) must:

- Have received specific and adequate training in the task to be carried out.
- Have read and understood the operations manual and the Safety Signs in this manual and around the machine(s).
- Knows the location and function of controls and safety features such as emergency stop buttons and safety guards.
- Be aware of all moving parts of the machine.

Any work on and/or with the machine must be executed by trained, reliable and authorised personnel only. Statutory minimum age limits must be observed.

Work on the electrical system and equipment of the machine must be carried out only by a skilled electrician or by instructed persons under the supervision and guidance of a skilled electrician and in accordance with electrical engineering rules and regulations.

Work on the hydraulic system must be carried out only by personnel with special knowledge and experience of hydraulic equipment.

(1) Personal Protective Equipment

Where possible when working close to engines or machinery, only do so when they are stopped. If this is not practical, remember to keep tools, test equipment and all other parts of your body well away from the moving parts. Loose or baggy clothing can get caught in running machinery.

For reasons of safety, long hair must be tied back or otherwise secured, garments must be close fitting and no jewelry such as rings may be worn. Injury may result from being caught up in the machinery or from rings catching on moving parts.

Always wear correctly fitting (EN/ANSI approved) protective clothing.

Protective clothing includes: Hard Hat, Safety Glasses, Ear Protection, Dust Mask, Close fitting Overalls, Steel Toed Boots and a High Visibility Vest.

2.4 Work Area Safety

(1) General Work Area Guidelines

Operators must have received specific training in all operating and service tasks as required for the safe operation and service of the machine. Operators must know the location and correct operation of all controls and safety features such as remote stop buttons and isolator switches. Operators must be aware of all moving parts on the machine.

Keep the work area as neat and as clean as practical. Keep your equipment clean and free of dirt and grease so it can be checked for loose, cracked or broken parts. Replace defective parts as soon as they are discovered.

The guards provided are designed and manufactured to ensure so far as reasonably practicable that the machinery and plant on which they are fitted can be operated safely and without risk to health when properly used. However, it cannot be guaranteed that the guards provided will meet the requirements laid down by individual Inspectors and any additional guard and/or modification to guarding supplied, which may be required for any reason whatsoever, will be charged as an addition to the Contract Price.

Maintenance platform should only be used when the machine is turned off, unless to perform specific maintenance procedures which require the machine to be operational. In this instance, only suitable trained and authorised personnel equipped with the correct PPE should be allowed access and the machine must be running empty and cleared of all material beforehand.

Always check that Maintenance platforms and handrails are fully secured in place before using.

Do not smoke or allow smoking near flammable fuels or solvents. Use non flammable solvents for cleaning parts and equipment. Know where fire extinguishers and other fire suppression equipment are located and learn how to use them.

Always use hoisting equipment for heavy loads. Regularly check hooks, cables, shackles and chains for stretch and wear. Never overload hoists, cranes or other lifting devices.

Avoid electrical and static sparks and any open flame while handling, storing, moving or pouring fuels, electrolytes for batteries, hydraulic fluids or coolants.

(2) Safety Warnings and Labels

You can be injured if you do not obey the safety instructions as indicated on warning signs. Observe all safety instructions and warnings attached to the equipment.

Ensure that safety instructions and warnings attached to the equipment are always complete and perfectly legible. Keep warnings and instruction labels clean and up to date.

Replace unreadable or missing labels with new ones before operating the machinery. Make sure replacement parts include warning or instruction labels where necessary.

(a) Modifications

Never make any modifications, additions or conversions which might affect safety without the supplier’s approval.

In the event of safety relevant modifications or changes in the behavior of the machinery during operation, stop the machine and lock out immediately and report the malfunction to the competent authority/ person.

(3) Transportation Safety

Before transporting the machine, observe the prescribed transport position, admissible speed and itinerary. Only use appropriate means of transport and lifting gear of adequate capacity. Know the overall height to avoid contacting overhead obstructions such as bridges, power lines etc.

The preparations to move equipment by an articulated lorry should be supervised by a minimum of two persons. Ensure persons transporting the machine adhere to all safety signs and procedures.

Before transportation on public roads, ensure the machine has been properly secured with no loose material left in or on the machine. Always observe the valid traffic regulations and, if necessary, ensure beforehand that the machine is in a condition compatible with these regulations.

Extreme caution is required when transporting machinery on site. Soft or uneven ground may cause accidents. On sloping terrain, always adapt your travelling speed to the relevant ground conditions. Never change to a lower gear on a slope. Always change gear before reaching a slope.

The machine is remote controlled and may start without notice. Stay clear of the machine. The machine must be loaded and transported only in accordance with the operating instructions. For manoeuvring the machine, observe the prescribed transport position, admissible speed and itinerary. Use only appropriate means of transport and lifting equipment and where applicable of adequate capacity. The re-commissioning procedure must be strictly in accordance with the operating instructions. Before travelling with the machine, check that the braking and any signalling and lighting systems are fully functional. Before setting the machine in motion always check that the accessories have been safely stowed away.

On wheeled machine:

Ensure wheel nuts are torqued between 500 to 550 ft.lb (69 to 76 kg.m) prior to transport.

Check your tires for:-

- correct pressure
- cuts or bulges
- nails or spikes
- uneven or excessive wear
- missing valve caps

Check your wheels for:-

- damaged rims
- missing or loose wheel nuts or bolts
- obvious misalignment

Have cuts or punctures repaired by authorised personnel before adding air. Beware that an over-inflated tire can explode and cause serious injury or death.

(4) Operation Safety

Before attempting to operate the machine, DO read, fully understand and observe the contents of this manual. Also any other relevant manual for other equipment incorporated in the machine, e.g. Engine manual. Study all safety signs on your machine.

It is emphasized that all safety aspects are checked before starting the machinery.

Make sure that you fully understand the operating procedures for the machine before attempting to start.

Take the necessary precautions to ensure that the machine is used only when in a safe and reliable state.

Operate the machine only for it's designed purpose and only if all guarding, protective and safety orientated devices, emergency shut-off equipment, sound proofing elements and exhausts, are in place and fully functional.

Before starting the engine ensure it is safe to do so. NEVER leave the machine unattended whilst it is in operation.

Before starting, walk completely around the machine. Make sure no one is under it, on it or close to it. Let other workers and bystanders know you are starting up and do not start until everyone is clear of the machine.

Before moving the machine, ensure that everyone is clear from the surrounding area and that the warning siren and beacon and the tracking umbilical Machine Stop button are operating correctly

Make certain enough ventilation is present to run engines safely. Do not start an engine in an enclosed space without properly vented exhaust. Exhaust fumes from gasoline or diesel engines can kill.

DO NOT allow a build up of solid material or dust in any part of the machine. In the event of material blockage, any malfunction or operational difficulty, stop the machine immediately and lockout. Have any defects rectified immediately.

Be alert and watch for pinch points, closing mechanisms, and falling parts when working on or around any machinery. Keep hands and tools clear. In-running nip points on moving machinery can cause serious injury or even death. Do not reach into unguarded machinery. Your arm could be pulled in and amputated. Switch off and lockout the machine before removing any safety devices or guarding.

Never work or stand beneath machinery or attachments as it is raised or lowered. Never work or stand beneath machinery as they are being loaded with and/or discharging material. During operation, do not climb onto, over or under moving conveyor belts and rollers. Always use ladders, steps and Maintenance platforms when mounting and dismounting.

Hole alignment on mechanical supports must be checked and secured with pins provided and in accordance with safety signs.

Follow safe operating practices. Operate the machine controls smoothly. Avoid sudden stops, starts or changes in direction. Only use emergency stop buttons or emergency stop lines (if fitted) in emergency situations or during safety drills.

Never check the tension of 'V' belts, drive chains and conveyors when machine is running.

DO check frequently the stability of the machine. The chassis SHOULD NOT have undue vibration during operation.

After each day's operation, always run the machine dry; never leave material in the beltfeeder on conveyor belts or screenbox. Starting a machine with a full load will cause strain problems in your machine.

(5) Hydraulic and Pneumatic Safety

Only persons having special knowledge and experience in hydraulic and pneumatic systems may carry out work on hydraulic and pneumatic equipment. Never disable or alter any hydraulic circuit or component without consulting with Terex.

Relieve all pressure in the hydraulic system by returning all controls to the neutral position. Turn off the machine and isolate power supply before any pipes, filter caps, filters or hydraulic fittings are disconnected or removed. Depressurize all system sections and pressure pipes (hydraulic system, compressed air system) to be removed in accordance with the specific instructions for the unit concerned before carrying out any repair work.

Hydraulic oil and equipment can become hot when working. There is a high risk of a burn hazard. A minimum cooling down time of 30 minutes must be allowed before any maintenance activities are carried out on the hydraulic system. A minimum cooling down time of 90 minutes must be allowed before any maintenance activities are carried out on the engine and powerunit. The cool down times reduce the risk of a burn hazard. Wear gloves when working with hydraulic and pneumatic equipment.

Check for leaks in tanks or tubing with flashlights or other proper equipment. Never use an open flame to check for leaks. Always use a piece of cardboard to check for leaks. Do not use your hand. Hydraulic fluid under pressure can penetrate the skin causing serious injury. If fluid is injected under the skin, it must be surgically removed or gangrene will result. Get medical help immediately if this occurs. Wear personal protective equipment including goggles and gloves.

Check all lines, hoses and screwed connections regularly for leaks and obvious damage. Splashed oil may cause injury and fire. Repair any damage immediately.

Hydraulic and compressed air lines must be laid and fitted properly. Ensure that no connections are interchanged. The fittings, lengths and quality of the hoses must comply with the technical requirements.

Always practice extreme cleanliness servicing hydraulic components.

Do not exceed safe limits. Never set a pressure relief valve to a pressure higher than that set at the factory.

For questions concerning accumulators, which are pressure-containment vessels, contact your Terex distributor. Malfunctioning valves or poor maintenance practices can result in build-up of extremely high hydraulic and/or pneumatic pressures inside the accumulator.

(6) Electrical Safety

Work on the electrical system or equipment may only be carried out by a skilled and qualified electrician or by specially instructed personnel under the control and supervision of such an electrician and in accordance with applicable electrical engineering rules and regulations.

Use only original fuses with the specified current rating. Switch off the machine immediately if trouble occurs in the electrical system.

Machines with high voltage electrical equipment must be suitably earth bonded by a qualified electrician prior to activating the main isolator switch. If machine is electric-hydraulic or direct electric drive, the 'mains' electrical supply to the machine should always be isolated by unplugging/ uncoupling the 'mains' power socket. It is recommended that an earth leakage safety switch be fitted in the supply line to the power point on site. Special care should be taken to ensure that earth wires are correctly connected.

When working with the machine, maintain a safe distance from overhead electric lines. If work is to be carried out close to overhead lines, the working equipment must be kept well away from them. Check out the prescribed safety distances.

If your machine comes into contact with a live wire:

- Warn others against approaching and touching the machine.
- Have the live wire de-energised.

If provided for in the regulations, the power supply to machines and parts of machines, on which inspection, maintenance and repair work is to be carried out, must be cut off. Before starting any work, check the de-energised parts for presence of power and ground or short circuit them in addition to insulating adjacent live parts and elements.

The electrical equipment of the machine is to be inspected and checked at regular intervals. Defects such as loose connections or scorched or otherwise damaged cables must be rectified immediately.

Necessary work on live parts and elements must be carried out only in the presence of a second person, who can cut off the power supply in the case of danger by actuating the emergency shut off or main power switch. Secure the working area with a red and white safety chain and a warning sign. Use insulated tools only.

Before starting work on high voltage assemblies and after cutting out the power supply, the feeder cable must be grounded and components such as capacitors short-circuited with a grounding rod.

Tracked machines are wired with negative earth. Always observe correct polarity.

Always disconnect battery leads before carrying out any maintenance to the electrical system or servicing the engine. Never short across the starter terminals of a battery as this can cause a fire and could also damage the electrical system. If welding is to be carried out on the machine, it is essential that the power pack is isolated.

The battery contains sulfuric acid, an electrolyte which can cause severe burns and produce explosive gases. Wear personal protective equipment and avoid contact with the skin, eyes or clothing.

Diesel engine exhaust emissions contain products of combustion which may be harmful to your health. Always operate the machine in a well ventilated area and if operating in an enclosed area, vent the emissions outside. Do not touch any part of the engine or exhaust system. Allow the engine and exhaust to cool before performing any repair or maintenance.

Never fill the fuel tank with the engine running, while smoking or when near an open flame. Never overfill the tank or spill fuel. If fuel is spilled, clean it up immediately.

(7) Maintenance Safety

Understand the service procedures before doing work. Keep working area clean and dry. Never lubricate, clean, service or adjust machinery while it is moving. Keep hands, feet and clothing clear of power driven parts and in running nip-points. Disengage all power and operate controls to relieve pressure. Stop the engine, implement the lockout and tag out procedure and allow the machinery to cool before carrying out any maintenance.

Whenever maintenance or service is being carried out a minimum of two (2) persons should be present at all times. NEVER WORK ALONE.

Keep all parts in good condition. Ensure that all parts are properly installed. Fix damage immediately. Replace worn and broken parts. Remove any build up of grease, oil and debris.

Never attempt repairs or adjustments to the machine while it is running unless specified to do so.

Before carrying out any maintenance, relieve all hydraulic pressure by returning the controls to the neutral position and secure all hydraulically operated attachments with pins provided.

Disconnect the battery ground cable before making adjustments on electrical systems or welding on machinery. For the execution of maintenance work, tools and workshop equipment adapted to the task on hand are absolutely indispensable.

Remove only guards or covers that provide access. Wipe away any excess grease and oil. Never leave guards off or access doors open when unattended. Keep bystanders away if access doors are open.

When working beneath raised equipment, always use blocks, jack-stands or other rigid and stable supports. Make sure that any part of the machine raised for any reason is prevented from falling by securing in a safe reliable manner. Never work under unsupported equipment.

For carrying out overhead assembly work always use specially designed or otherwise safety-oriented ladders and working platforms. Always use any Maintenance platform provided or a safe and secure platform approved by the regional safety enforcing authority.

When working at height make sure you take all necessary precautions in line with local regulations and use approved PPE, safety harnesses and work platforms. If you are not aware of working at height requirements speak to your manager before starting any work. Keep all handles, steps, handrails, platforms, landing and ladders free from dirt, oil, snow and ice

Return idler roller guards should be checked for wear/damage during routine maintenance. The gap between the guard and the idler roller should not exceed 6 mm. The gap between the idler roller and the guard must be renewed. Contact your local Terex dealer to obtain an approved replacement.

Maintenance and Repairs During Operation; Disposal of Parts and Consumables

Observe the adjusting, maintenance and intervals set out in these operating instructions, except where:

- Warning, horn/light/gauge or indicator calls for immediate action.
- Adverse conditions necessitate more frequent servicing.

Observe information on the replacement of parts and equipment. These activities may be executed by skilled personnel only.

When the machine is completely shutdown for maintenance and repair work, it must be secured against inadvertent starting by:

- Switching off the engine and removing the ignition key or isolating the electrical supply as applicable.

- Implementing the lockout procedure.
- Attaching a warning sign(s) to the machinery in appropriate positions.

Carry out maintenance and repair work only if the machine is positioned on stable and level ground and has been secured against inadvertent movement and buckling.

Never allow unqualified or untrained personnel to attempt to remove or replace any part of the machine, or anyone to remove large or heavy components without adequate lifting equipment.

To avoid the risk of accidents, individual parts and large assemblies being moved for replacement purposes should be carefully attached to lifting tackle and secured. Use only suitable and technically adequate lifting gear. Never work or stand under suspended loads.

Keep away from the feed hoppers and stockpile conveyor discharge points, where there is risk of serious injury or death due to the loading and removal of material.

Falling from and/or onto Terex machines can cause injury or even death. Do not climb on the machine whilst it is in operation. Never use machine parts as a climbing aid.

Beware of moving haulage and loading equipment in the vicinity of the machine.

Keep all handles, steps, handrails, platforms, landing and ladders free from dirt, oil, snow and ice.

The fastening of loads and instructing of crane operators should be entrusted to experienced persons only. The marshaller giving the instructions must be within sight or sound of the operator.

After cleaning, examine all fuel, lubricant, and hydraulic fluid lines for leaks, loose connections, chafe marks and damage. Any defects found must be rectified without delay.

Any safety devices removed for setup, maintenance or repair purposes must be refitted and checked immediately upon completion of the maintenance and repair work to ensure full working order.

Improperly disposing of waste can threaten the environment and ecology. Potentially harmful waste used with Terex equipment includes such items as oil, fuel, coolant, filters and batteries, etc. Use leakproof containers when draining fluids. Do not use food or beverage containers that may mislead someone into drinking from them. Do not pour waste onto the ground, down a drain or into any water source. Ensure that all consumable and replaced parts are disposed of safely and with minimum environmental impact.

Always ensure that any safety fitments such as locking wedges, securing chains, bars or struts are utilized as indicated in these operating instructions.

Diesel fuel is highly flammable. Never remove the filler cap, or refuel, with the engine running. Never add gasoline or any other fuels mixed to diesel because of increased fire or explosion risks. Do not carry out maintenance on the fuel system near naked lights or sources of sparks, such as welding equipment or whilst smoking.

After maintenance, tighten all bolts, fittings and connections. Install all guards, covers and shields. Replace or repair any damaged ones. Refill and recharge pressure systems with recommended fluids. Start the engine and check for leaks. Operate all controls and make sure the machine is functioning properly. After testing, shut down, check the work you performed. Recheck all fluid levels before releasing machine for operation.

(8) Gas, Dust, Steam, Smoke

Death, serious injury or delayed lung disease may result from breathing dusts that are generated when certain hazardous materials are crushed, screened or conveyed with this equipment.

Always operate internal combustion engines and fuel operated heating systems only out of doors or in a well-ventilated area. Before starting the machine in enclosed areas, make sure that there is sufficient ventilation.

Observe the regulations in force at the respective site.

Dust found on the machine or produced during work on the machine should be removed by extraction, not blowing. Dust waste should be dampened, placed in a sealed container and marked, to ensure safe disposal.

When dusts are generated by the operation of this equipment, use approved respiratory protection, as required by Federal, State and Local safety and health regulations.

Carry out welding, flame cutting and grinding work on the machine only if this has been expressly authorised, as there may be a risk of explosion and fire.

Before carrying out welding, flame cutting and grinding operations, clean the machine and its surroundings from dust and other flammable substances and make sure the premises are adequately ventilated as there may be a risk of explosion.

Ensure operators wear a suitable face mask where exposed to possible harmful effects of air pollution of any kind.

(9) Hazardous Substances

Ensure that correct procedures are formulated to safely handle hazardous materials by correct identification, labelling, storage, use and disposal.

All hazardous materials must be handled strictly in accordance with the manufacturers instructions and all applicable regulations observed at all times. Store hazardous materials in restricted access areas and mark them clearly.

(10) Noise Levels

HEARING HAZARD EXCEEDS 90 dB (A)

May cause loss or degradation of hearing over a period of time.

Always ensure that operators are provided with ear defenders of approved pattern and that these are worn at all times when the machine is operating.

(11) Fire Hazards

⚠ WARNING

This machine has an allocated position for a fire extinguisher to be mounted. The fire extinguishers are provided by the end user and not by Terex.

Holes are required to be drilled for the fire extinguisher mounting brackets and caution must be taken. There are hydraulic hoses and pipes on the opposite side of the recommended mounting area. When the holes are drilled, they are to be threaded to allow the fire extinguisher bracket to be securely mounted.

It is the owners responsibility to ensure that the fire extinguishers fitted are adequate for the following types of combustible materials on the machine:

- Ordinary combustibles
- Flammable liquid and gas
- Electrical

(12) Exclusion Zones

(a) Magnet

⚠ DANGER

Strong Magnetic Field Hazard.

Strong magnetic field can disrupt pacemaker operation and result in serious injury or death to a pacemaker wearer.

STAY CLEAR FROM MAGNET.

The operator must stand out of the exclusion zones while the machine is operating. The magnetic field can disturb pacemaker operation if within 3 metres.

⚠ WARNING

Flying Material Hazard

Materials discharged from the magnet can result in serious injury or death.

NOTICE

The operator must stay clear of the magnet while in operation. If inspection of magnet is required lockout and tagout the machine.

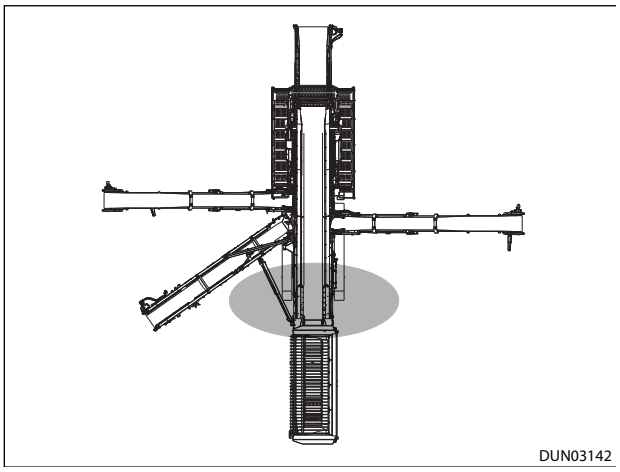

Figure 2.4 - Magnet Exclusion Zones

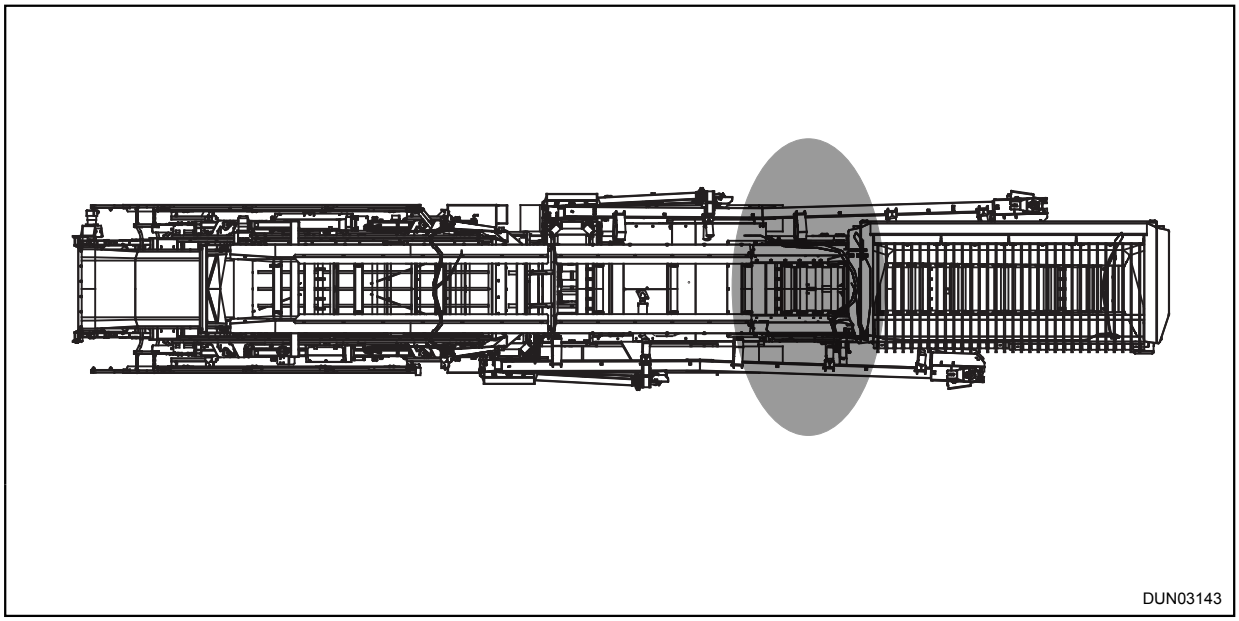

Figure 2.5 - Magnet Exclusion Zones

2.5 Emergency Stop Locations

Emergency stops are located at both the left hand side and right hand side of the machine.

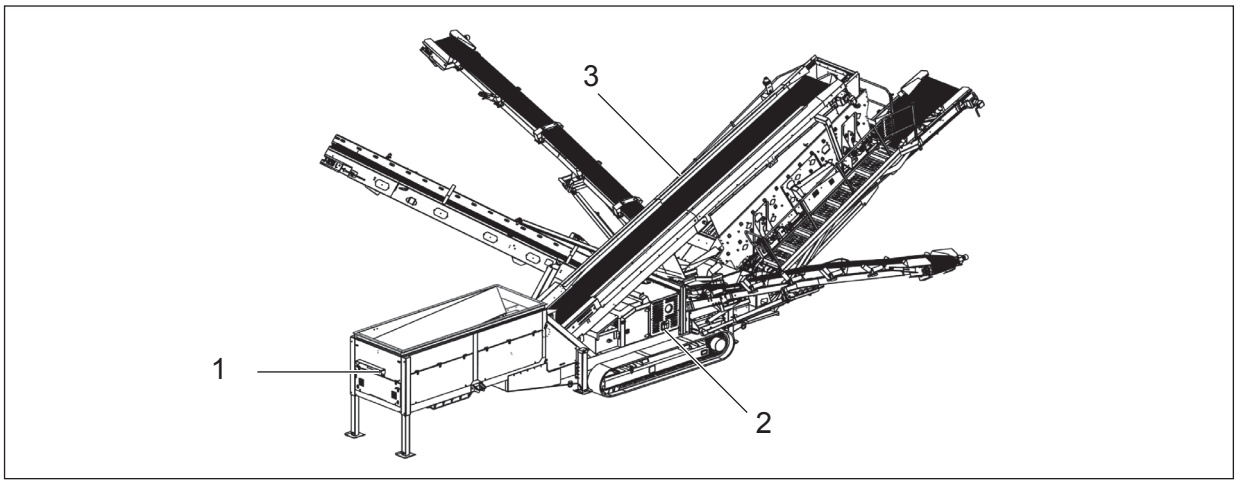

Figure 2.6 - Emergency Stop Locations Dry Option

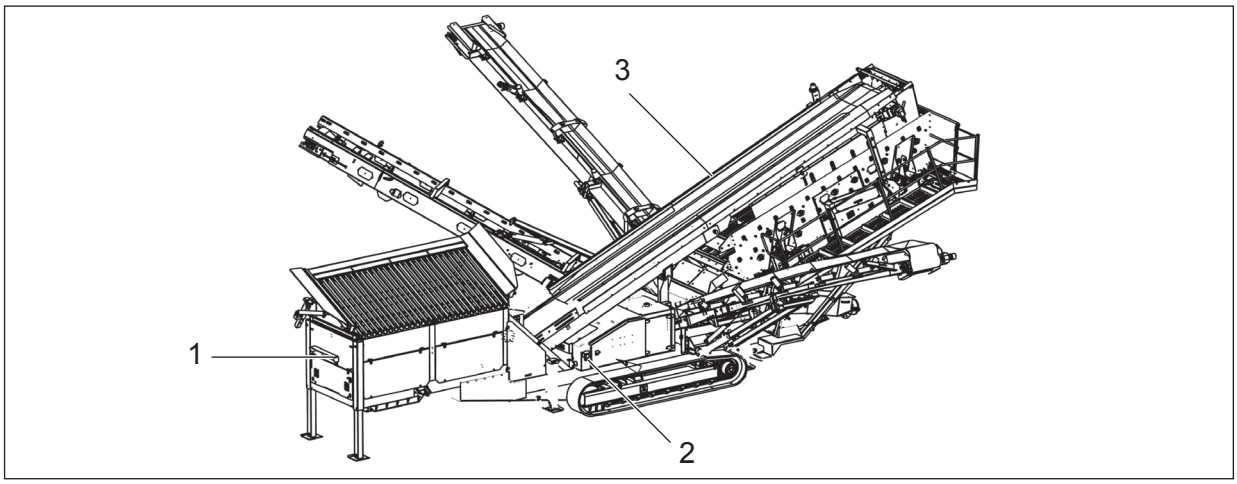

Figure 2.7 - Emergency Stop Locations Rinser Option

Intentionally Left Blank

Table of Content

3 Technical Data 3-3

3.1 General Information 3-3
(1) Machine Weights 3-3
3.2 Machine Component Specifications 3-3
(1) Feeder Unit 3-3
(a) Reject Grid 3-3
(b) Vibrating Grid 3-3
(c) Feed Hopper 3-3
(2) Screen Unit 3-4
(a) Screenbox 3-4
(b) Screen Meshes (available in a range of sizes) 3-4
(3) Main Conveyor 3-4
(4) Side Conveyors 3-4
(5) Tail Conveyor - DRY UNIT ONLY 3-4
(6) Auxiliary Conveyor 3 Deck Only 3-4
(a) Auxiliary Conveyor 3 Deck Only 3-4
(7) Power Unit 3-5
(a) Engine 3-5
(b) Electric Hydraulic Machine 3-5
(c) Battery 3-5
(8) Chassis 3-5
(a) Tyres 3-5
(b) Tracks 3-5
(9) Hydraulics 3-6
(a) Hoses 3-6
(10) Shredder Unit 3-6
(11) Catchbox - RINSER OPTION ONLY 3-6
(12) Washbox - RINSER OPTION ONLY 3-6
3.3 Machine Drawings 3-7
(1) 2 Deck Track Working Position 3-7
(2) 2 Deck Track Transport Position 3-8
(3) 2 Deck Track Vibrating Grid Working Position 3-9
(4) 2 Deck Track Vibrating Grid Transport Position 3-10
(5) 2 Deck Wheel Working Position 3-11
(6) 2 Deck Wheel Transport Position 3-12
(7) 2 Deck Wheel Vibrating Grid Working Position 3-13
(8) 2 Deck Wheel Vibrating Grid Transport Position 3-14
(9) 3 Deck Track Standard Length Auxiliary Conveyor Working Position 3-15
(10) 3 Deck Track Standard Length Auxiliary Conveyor Transport Position 3-16
(11) 3 Deck Track Extended Length Auxiliary Conveyor Working Position 3-17
(12) 3 Deck Track Extended Length Auxiliary Conveyor Transport Position 3-18
(13) 3 Deck Track Vibrating Grid Standard Length Auxiliary Conveyor Working Position 3-19

(14) 3 Deck Track Vibrating Grid Standard Length Auxiliary Conveyor Transport Position 3-20
(15) 3 Deck Track Vibrating Grid Extended Length Auxiliary Conveyor Working Position 3-21
(16) 3 Deck Track Vibrating Grid Extended Length Auxiliary Conveyor Transport Position 3-22
(17) 3 Deck Wheel Standard Length Auxiliary Conveyor Working Position 3-23
(18) 3 deck Wheel Standard Length Auxiliary Conveyor Transport Position... 3-24
(19) 3 Deck Wheel Vibrating Grid Standard Length Auxiliary Conveyor Working Position 3-25
(20) 3 Deck Wheel Double Deck Vibrating Grid Standard Length Auxiliary Conveyor Transport Position 3-26
(21) Work Area Required for Machine 3-27
3.4 Noise Levels.....3-28

3 Technical Data

3.1 General Information

(1) Machine Weights

Machine ..... CHIEFTAIN 1700

Type ..... Mobile screening machine

2 deck 14ft Hopper (with grid) wheel ... 24,700 kg (54,454 lbs)

2 deck 14ft Hopper (with grid) track..... 26,900 kg (59,304 lbs)

3 deck 14ft Hopper (with grid) wheel ... 27,500 kgs (60,627 lbs)

3 deck 14ft Hopper (with grid) track..... 29,800 kg (65,698 lbs)

Total weight (3 deck track, 12ft grid).... 29,400 kg (32.4 US tons)

3.2 Machine Component Specifications

(1) Feeder Unit

(a) Reject Grid

Loading Width 14 ft..... 4.85 m x 1.85 m (15’10” x 6‘)

Grid bar aperture ..... 102 mm (4”)

Grid area 12ft..... 3.57 m x 1.8 m (11’9” x 5’11“)

Grid area 14ft..... 4.18 m x 1.8 m (13’9” x 5’11“)

Grid angle ..... 0° - 16°

Weight of grid bars ..... 700 kg

Radio transmitter ..... 27 A 12 volt battery

(b) Vibrating Grid

Loading Width..... 3.57 m x 2.14 m (11’9” x 7“)

Grid bar aperture ..... 102 mm (4“)

Screen area ..... 3.05 m x 2.14 m (10‘ x 7‘)

Grid angle ..... 10°-20° (4 Positions)

Weight ..... 4000 kg

(c) Feed Hopper

Opening size..... 3.57 m x 1.8 m (11’9” x 5’11“)

Capacity (inc. grid) Track Machine ..... 7.5 cu m (9.8 cu yds)

Capacity (inc. grid) Wheel Machine..... 7.5 cu m (9.8 cu yds)

Feeder Conveyor

Belt width ..... 1050 mm (42”)

Type ..... 3 ply

(2) Screen Unit

(a) Screenbox

Width .....1.5 m (5’)

Length.....4.88 m (16’)

Weight .....3500 kg

Screen Angle .....20° - 32°

3 Deck screenbox configuration

Top and middle decks.....4.8 m x 1.5 m (16’ x 5’)

Bottom deck.....4.3 m x 1.5 m (14’ x 5’)

2 Deck screenbox configuration

Top deck .....4.8 m x 1.5 (16’ x 5’)

Bottom deck.....4.3 m x 1.5 (14’ x 5’)

(b) Screen Meshes (available in a range of sizes)

Lightest mesh weight.....20 kg

Heaviest mesh weight .....150 kg

(3) Main Conveyor

Belt width .....1050 mm (42’’)

Working Angle .....18°-26° Max.

(4) Side Conveyors

Belt width .....650 mm (26’’)

Working Angle .....25°

(5) Tail Conveyor - DRY UNIT ONLY

Belt width .....1200 mm (48’’)

Variable Working Angle.....25° (max.)

(6) Auxiliary Conveyor 3 Deck Only

Belt Width .....650 mm (26’’)

Stockpile .....4.3 m (14’ - 1’’)

Working Angle .....22°

(a) Auxiliary Conveyor 3 Deck Only

Belt Width .....650 mm (26’’)

Stockpile .....5.2 m (17’ 2’’)

Working Angle .....22°

(7) Power Unit

(a) Engine

Refer to engine operation manual supplied with the machine.

(i) Tier 3 Engine

CAT C4.4 ATAAC (Tier 3 / Stage 3A) - 4 cylinder diesel 83 kW (111.3 hp) @ 1040 rpm

(Manual and electronic control options available)

(ii) Tier 4 Engine

Tier 4 Final: CAT C4.4 - 4 cylinder diesel engine developing 82 kW (110 hp) @ 1040 rpm

Refer to the engine operations manual supplied with the machine.

(b) Electric Hydraulic Machine

3 phase 380 - 415 Volts (depending on normal country voltage.)

(c) Battery

Type.....12 Volt, negative earth

Cranking Power.....810 amps SAE

(8) Chassis

(a) Tyres

Chieftain 1700 .....235/75/R17.5

(b) Tracks

Track width: .....400 mm

Output torque: .....24,769 Nm

Gradability degrees: 22.4º

Gearbox ratio: 1:127

Hydraulic motor: .....63 cc/rev

Approximate speed: .....0.81 kph (0.5 mph)

Total flow per track: .....72.6 Lpm

(9) Hydraulics

(a) Hoses

Type	Diameter	Working pressure	Test pressure	Burst pressure
2 SN-K “Semperpac 1” DIN 20022 Part 3	3/4”	3500 psi	7395 psi	14210 psi
R1 AT DIN 20022 Part 3	3/16”	3570 psi	8700 psi	14500 psi
	1/4”	3210 psi	7830 psi	13050 psi
	5/16”	3070 psi	7395 psi	12325 psi
	3/8”	2570 psi	6307 psi	10440 psi
	1/2”	2295 psi	5582 psi	9280 psi
	5/8”	1855 psi	4567 psi	7540 psi
	3/4”	1500 psi	3697 psi	6090 psi
	1”	1255 psi	3045 psi	5075 psi
	1 1/4”	900 psi	2175 psi	3625 psi
	1 1/2”	715 psi	1740 psi	2900 psi
	2”	570 psi	1392 psi	2320 psi
R2 AT DIN 20022 Part 4	3/16”	5930 psi	14355 psi	23925 psi
	1/4”	5710 psi	13920 psi	23200 psi
	5/16”	5000 psi	12180 psi	20300 psi
	3/8”	4710 psi	11527 psi	19140 psi
	1/2”	3930 psi	9570 psi	15950 psi
	5/8”	3570 psi	8700 psi	14500 psi
	3/4”	3070 psi	7395 psi	12325 psi
	1”	2355 psi	5655 psi	9425 psi
	1 1/4”	1785 psi	4350 psi	7250 psi
	1 1/2”	1285 psi	3190 psi	5220 psi
	2”	1140 psi	2827 psi	4640 psi

(10) Shredder Unit

Inside Width.....800 mm

Number of Flails 22

(11) Catchbox - RINSER OPTION ONLY

Hydraulically hinged, making mesh changing easier

50-50 Fixed division plate

Adjustable division plates

10” twin outlets

(12) Washbox - RINSER OPTION ONLY

Adjustable 5 nozzle spray bar

Feed Conveyor Belt Scraper

Steel wear Plate

3.3 Machine Drawings

(1) 2 Deck Track Working Position

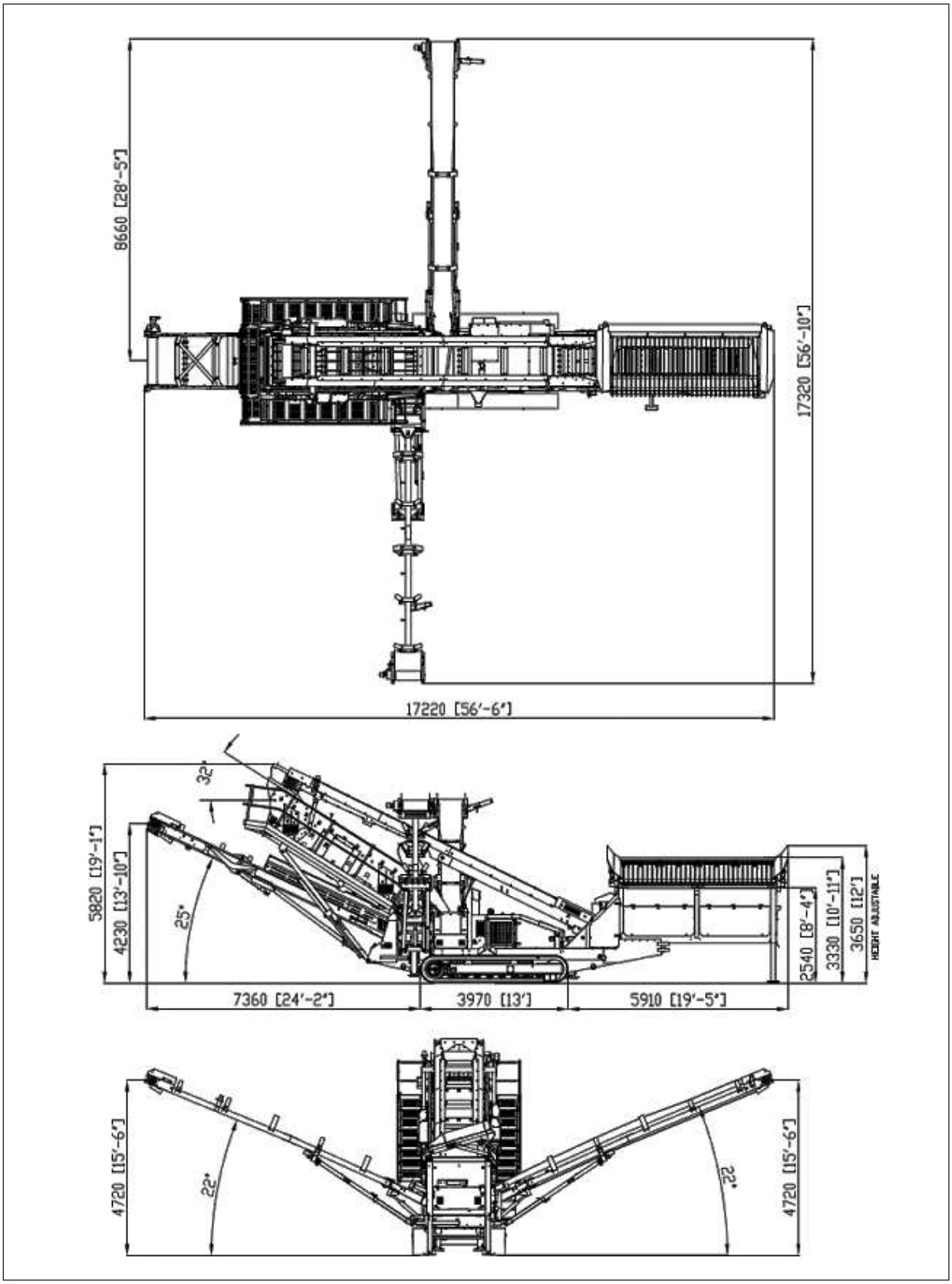

(2) 2 Deck Track Transport Position

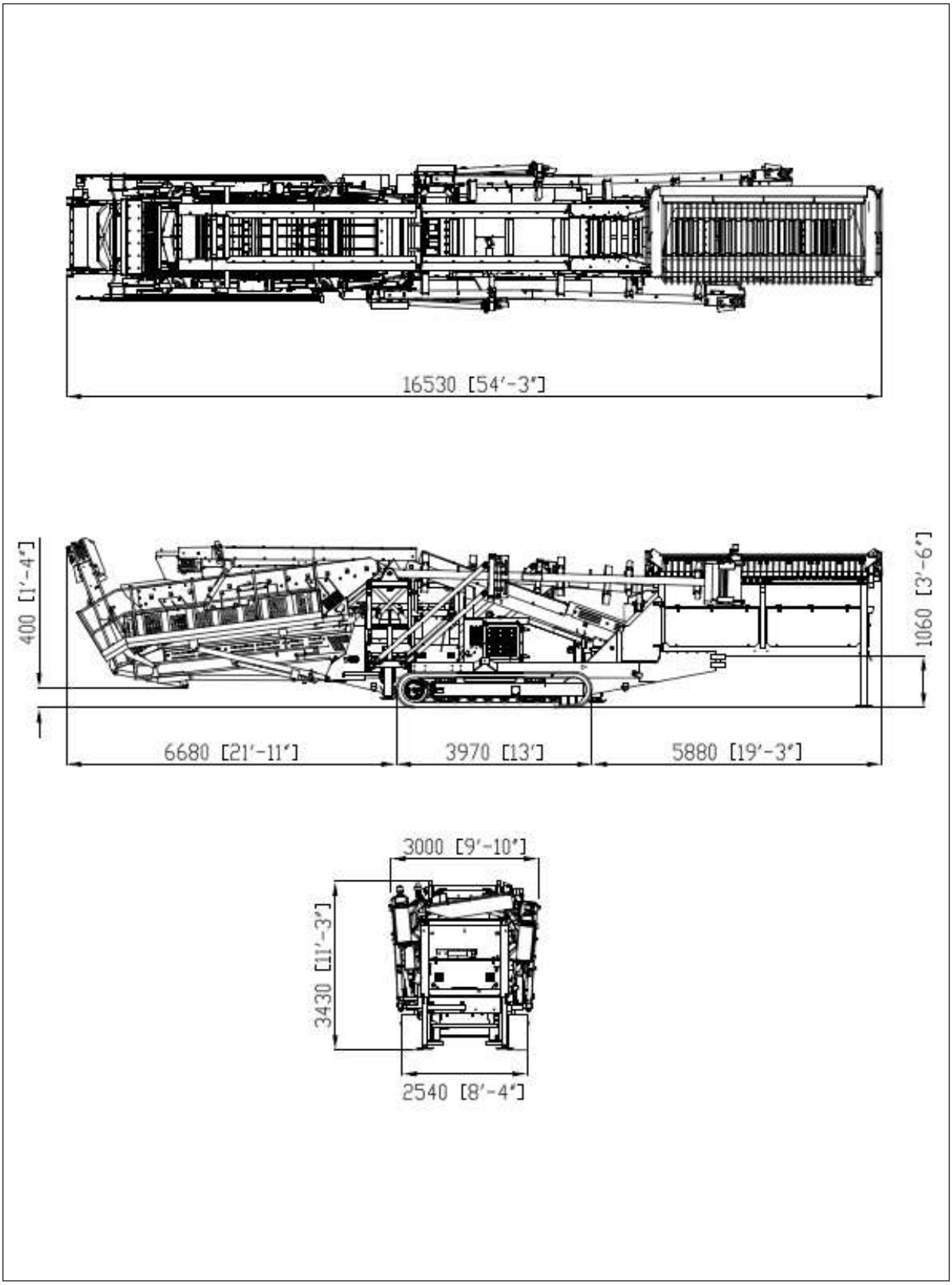

(3) 2 Deck Track Vibrating Grid Working Position

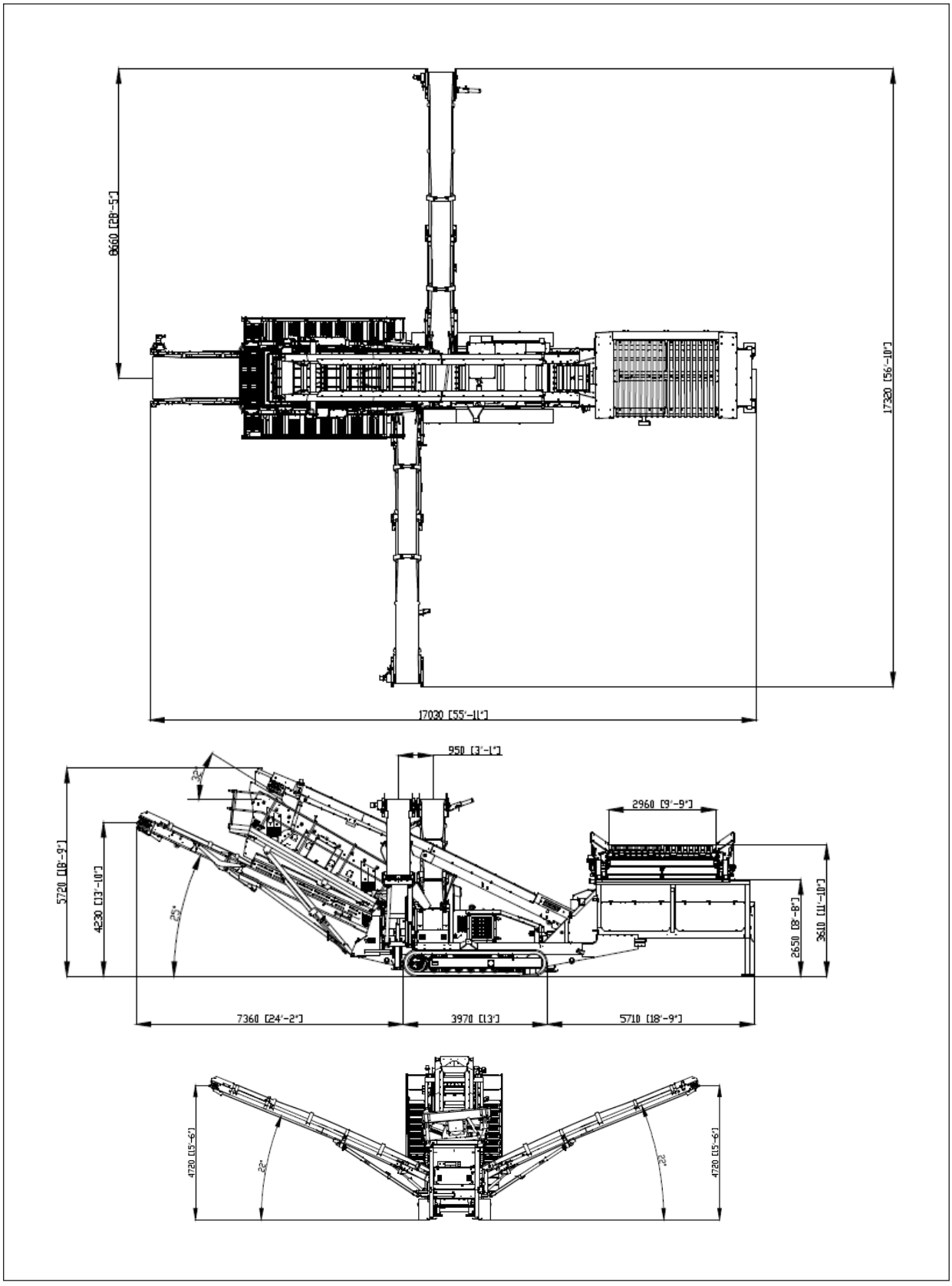

(4) 2 Deck Track Vibrating Grid Transport Position

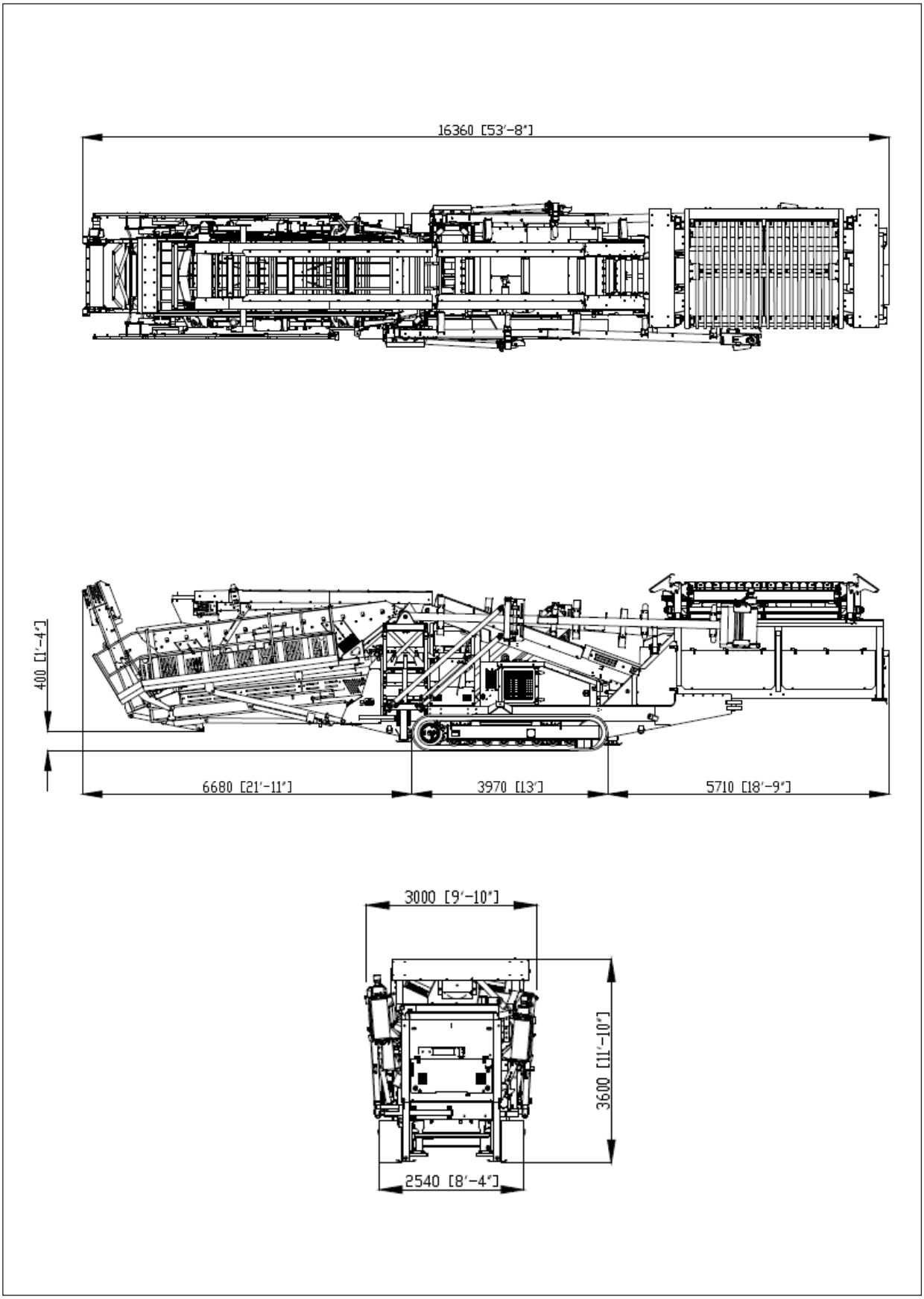

(5) 2 Deck Wheel Working Position

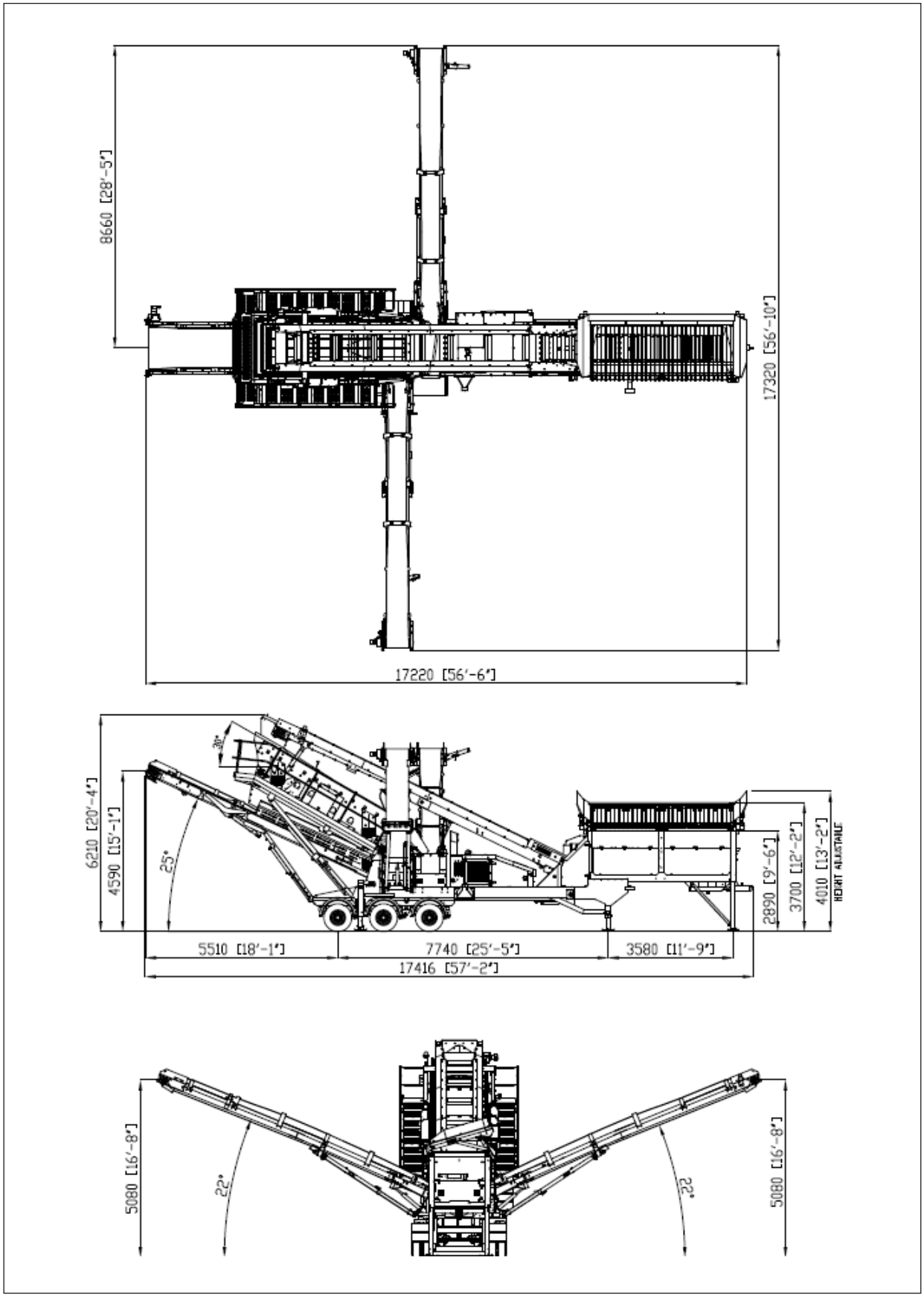

(6) 2 Deck Wheel Transport Position

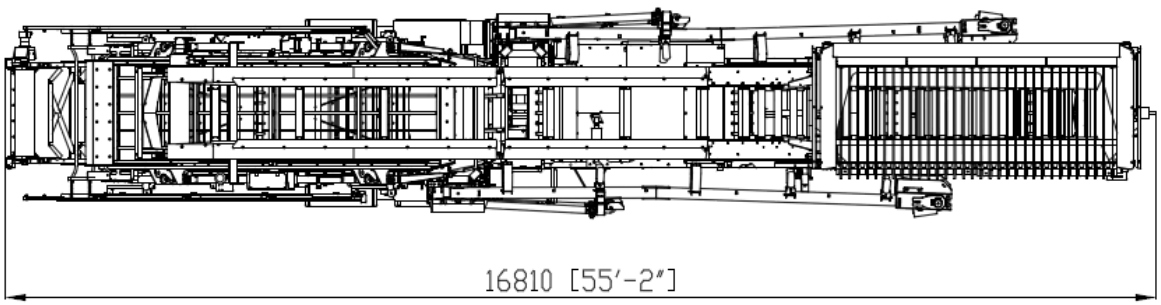

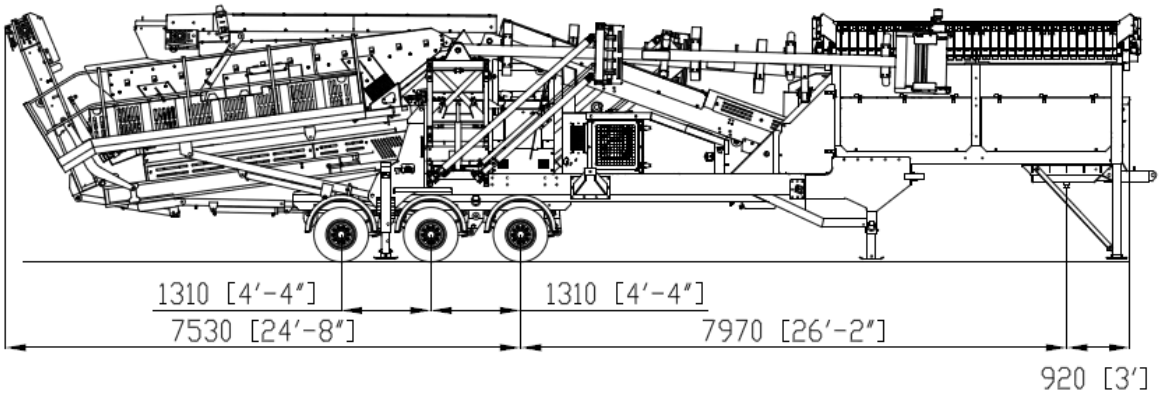

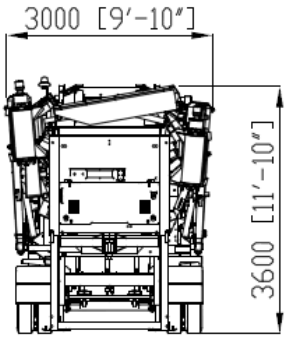

(7) 2 Deck Wheel Vibrating Grid Working Position

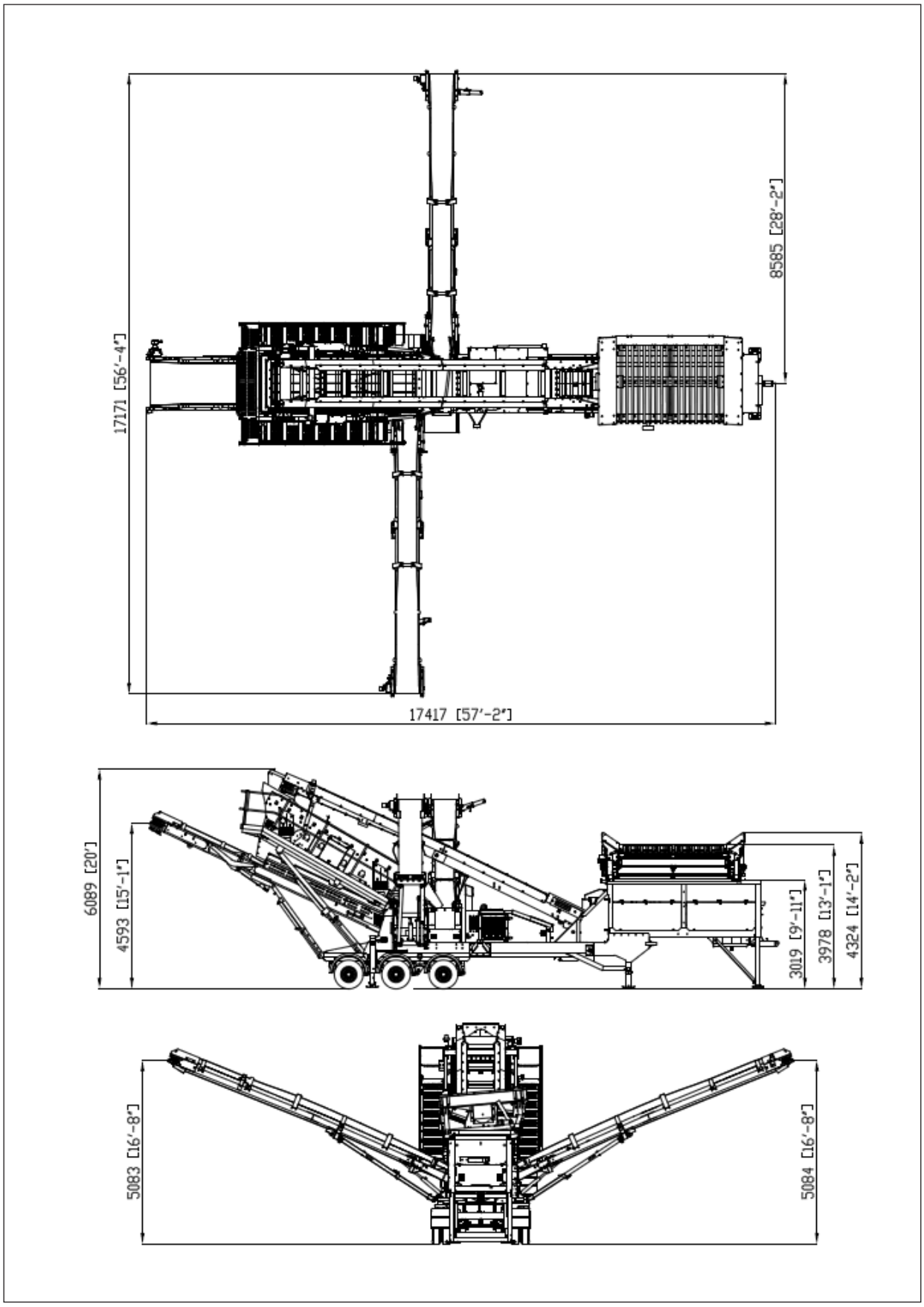

(8) 2 Deck Wheel Vibrating Grid Transport Position

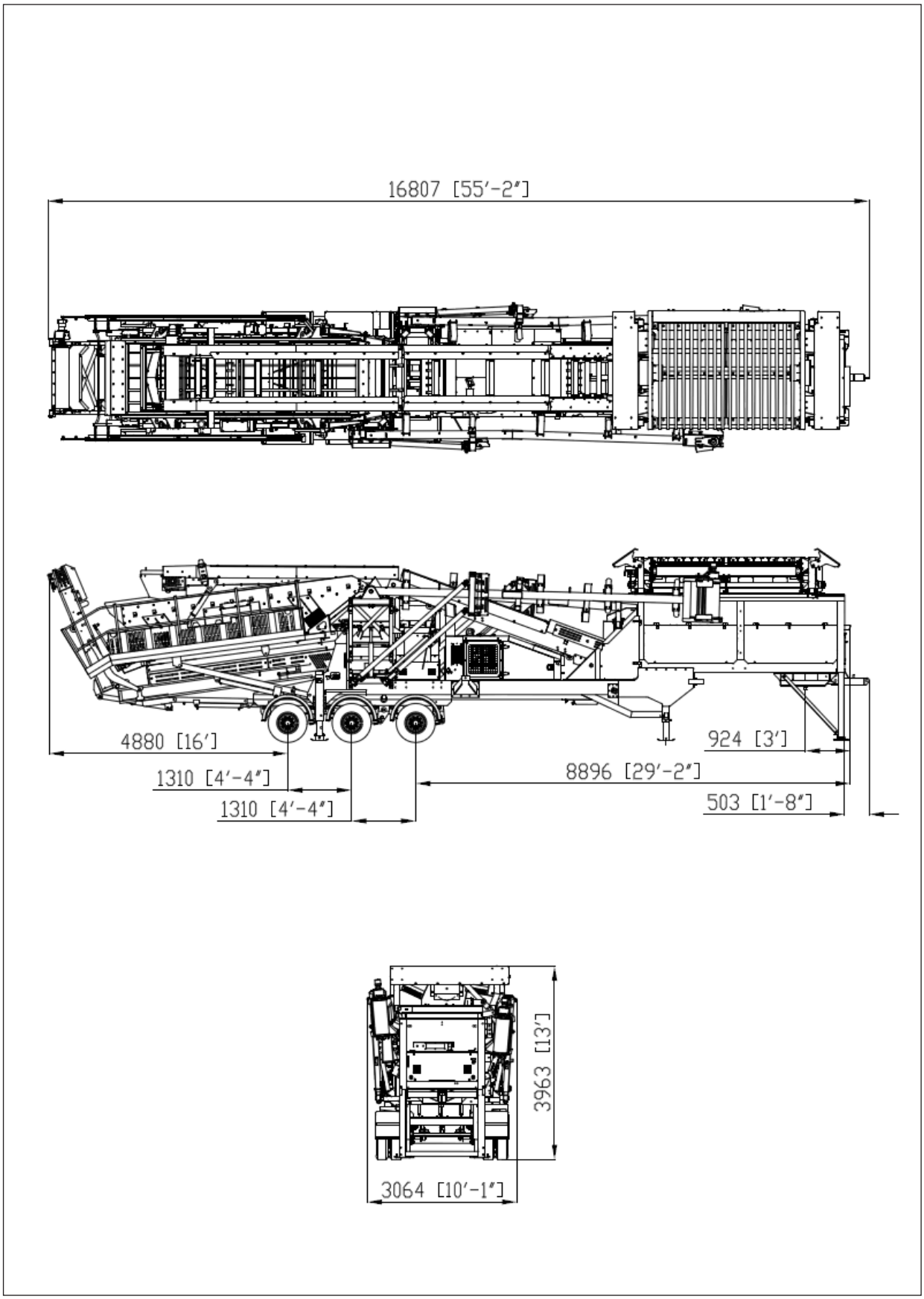

(9) 3 Deck Track Standard Length Auxiliary Conveyor Working Position

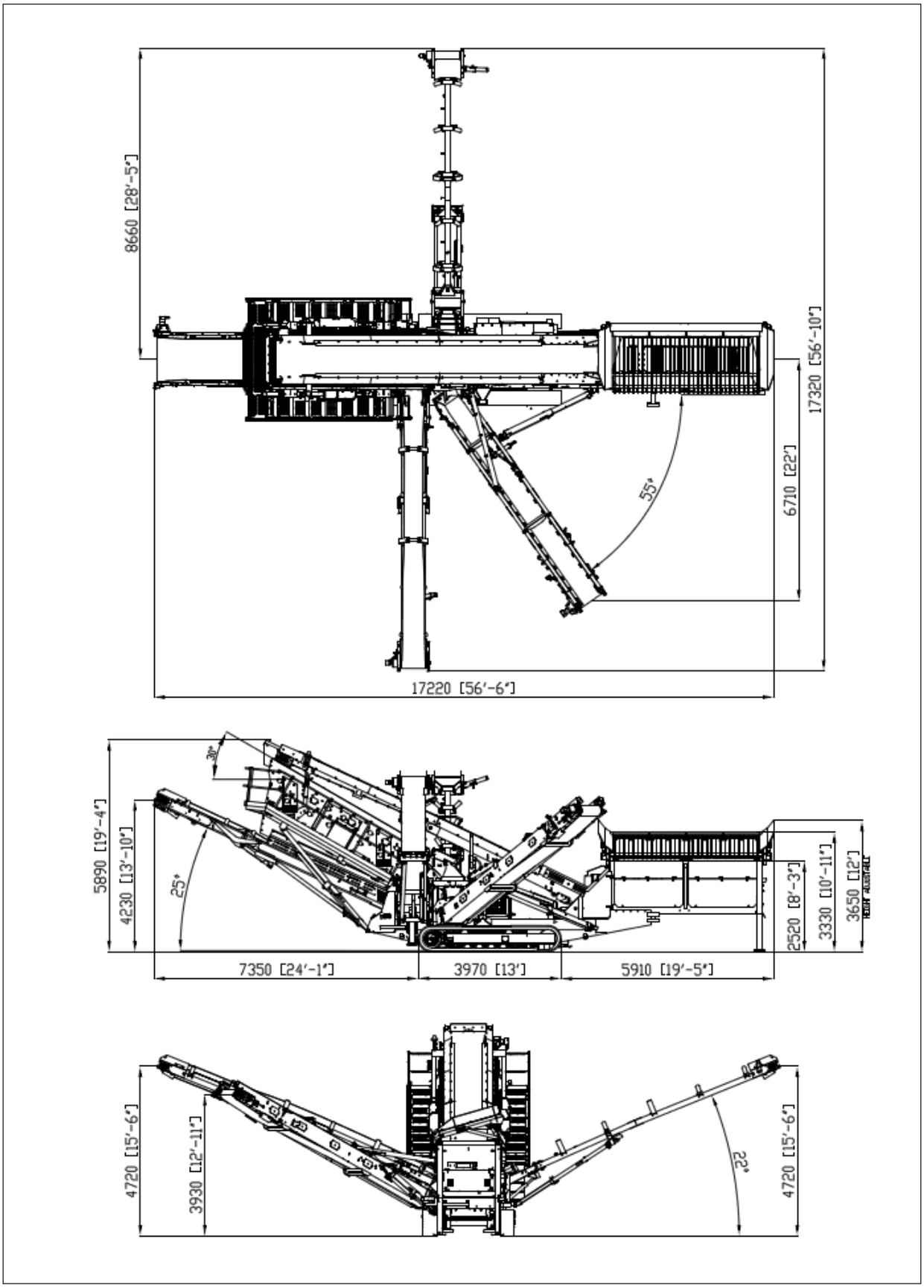

(10) 3 Deck Track Standard Length Auxiliary Conveyor Transport Position

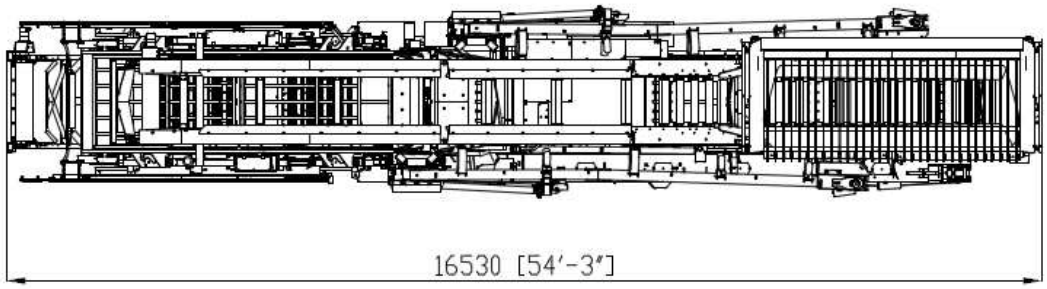

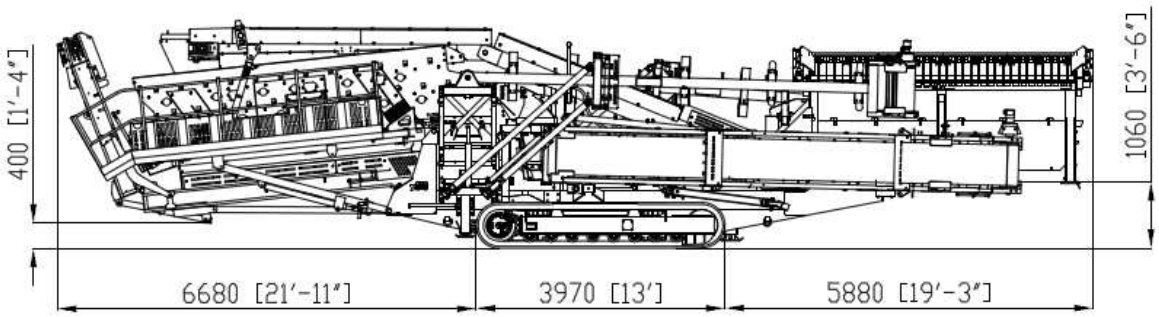

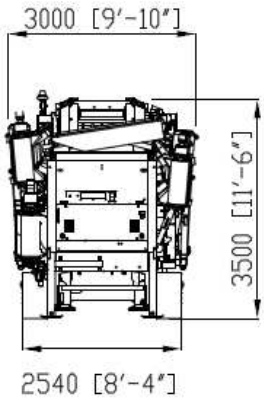

(11) 3 Deck Track Extended Length Auxiliary Conveyor Working Position

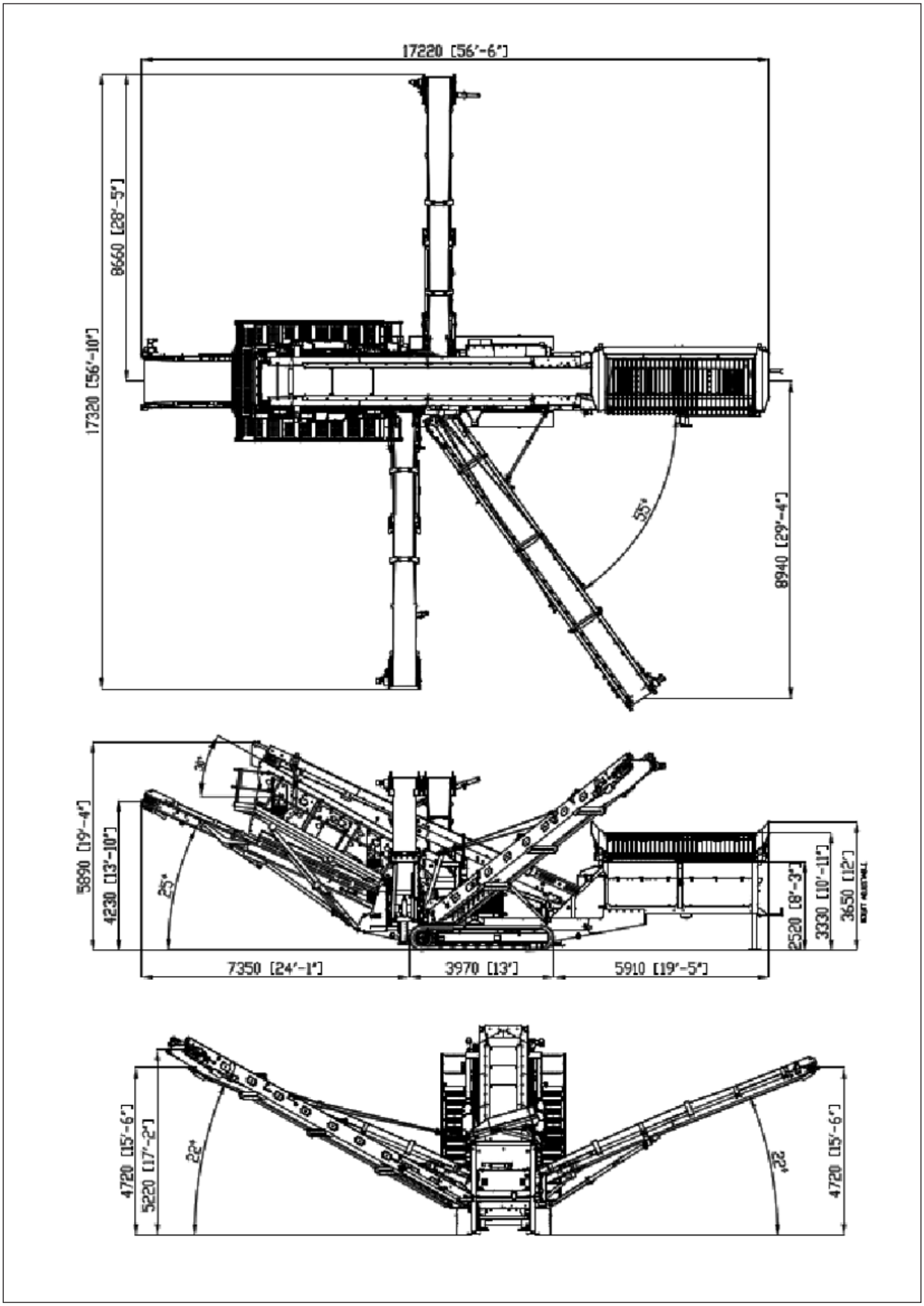

(12) 3 Deck Track Extended Length Auxiliary Conveyor Transport Position

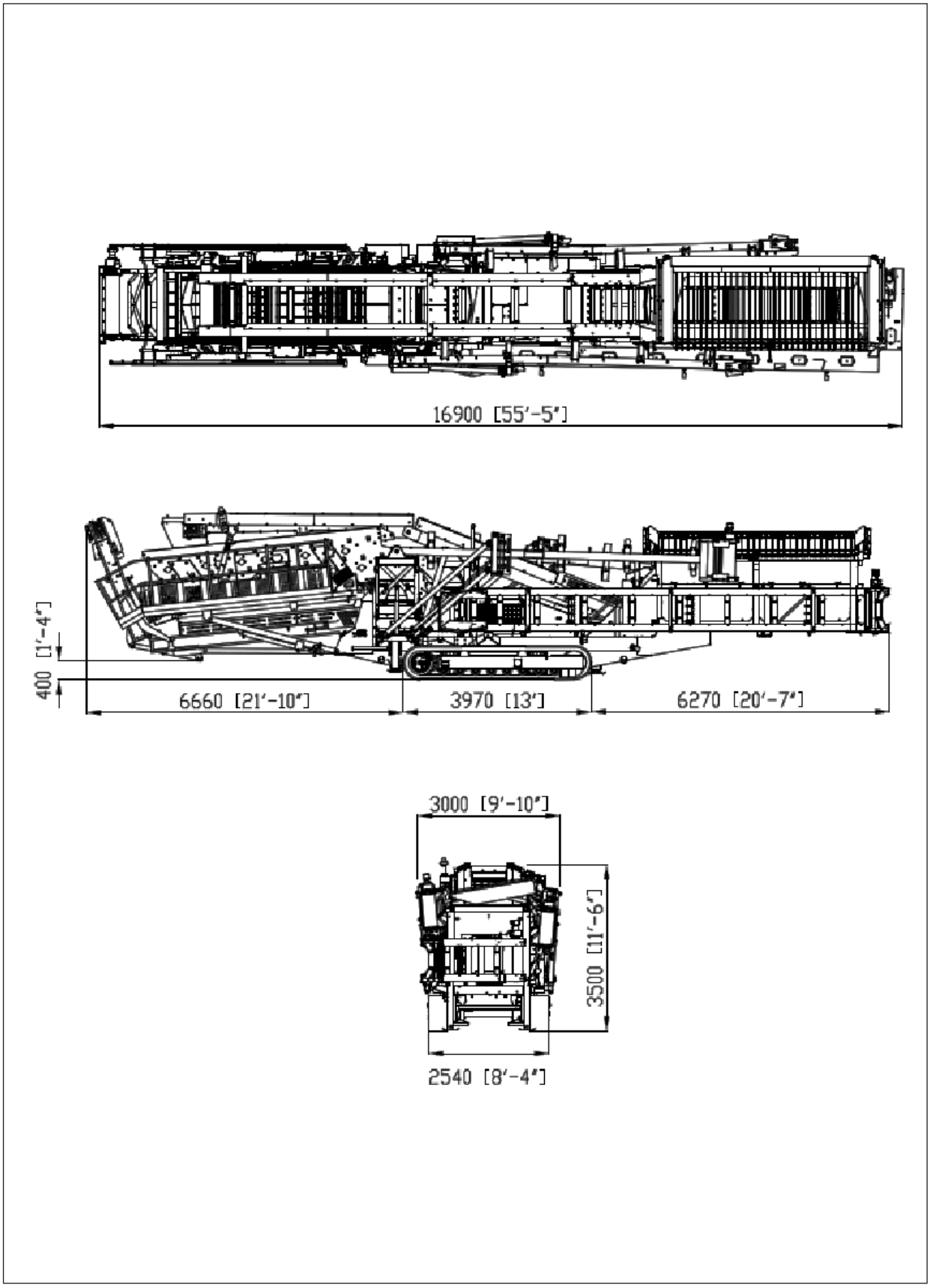

(13) 3 Deck Track Vibrating Grid Standard Length Auxiliary Conveyor Working Position

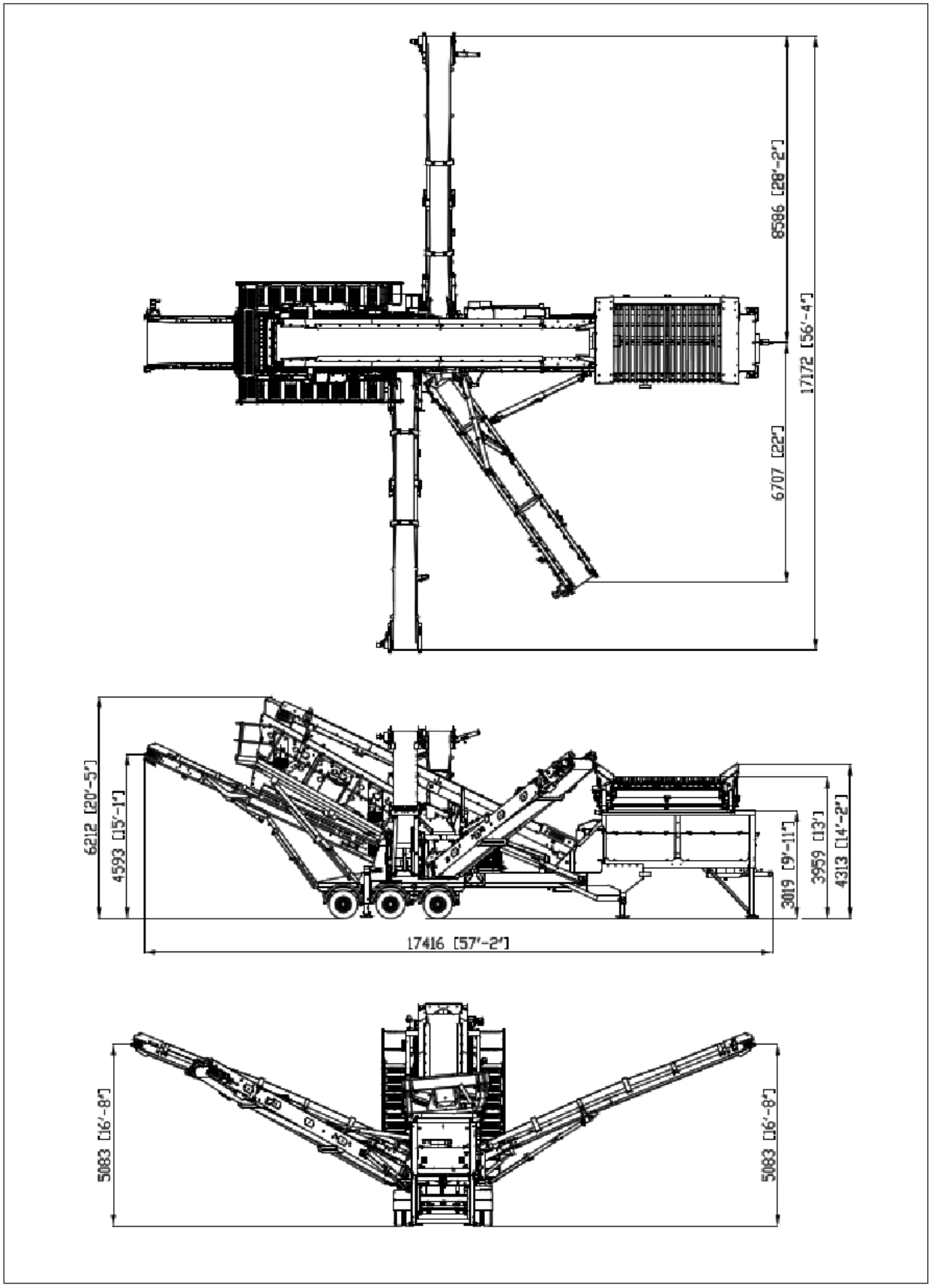

(14) 3 Deck Track Vibrating Grid Standard Length Auxiliary Conveyor Transport Position

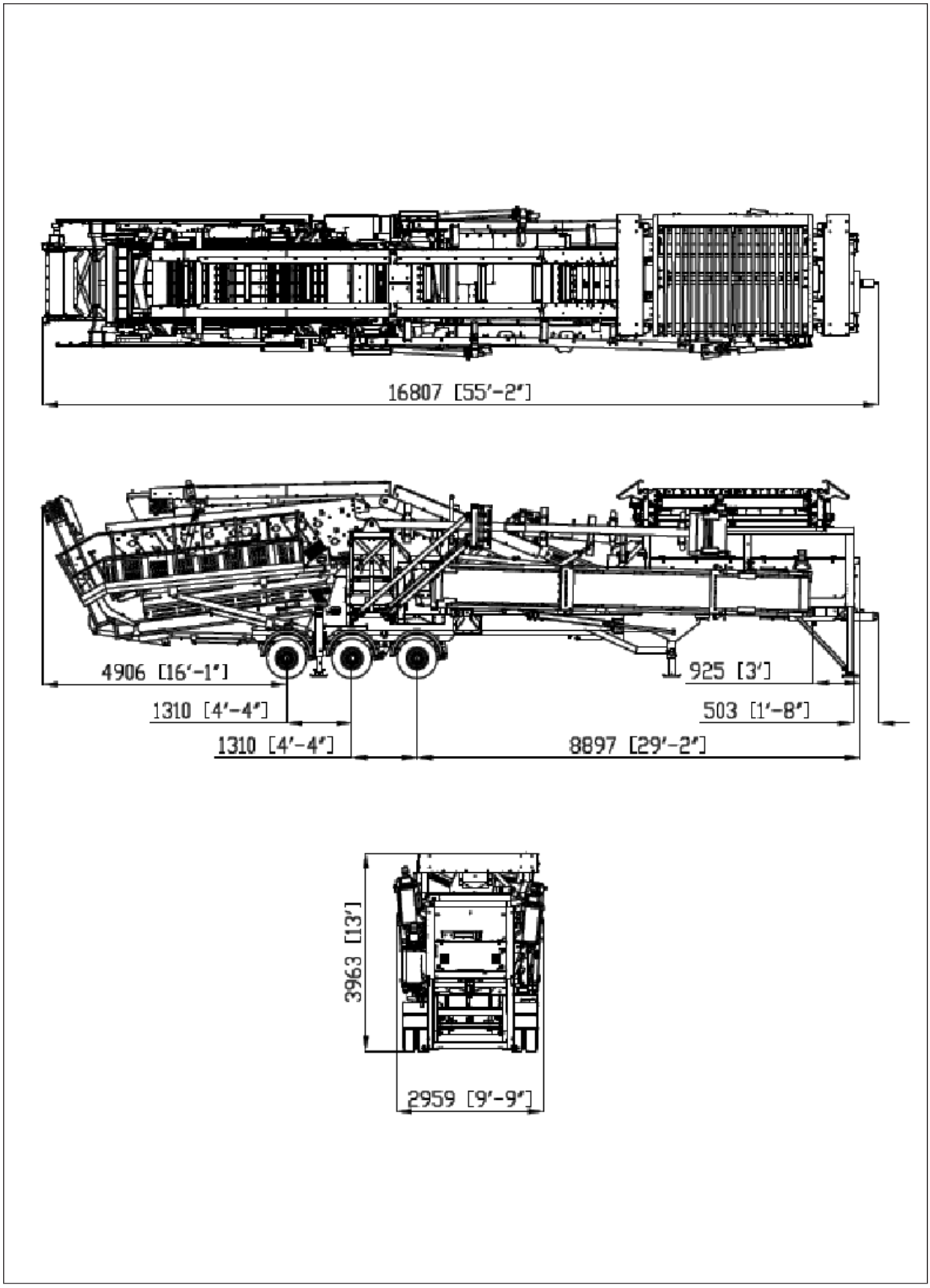

(15) 3 Deck Track Vibrating Grid Extended Length Auxiliary Conveyor Working Position

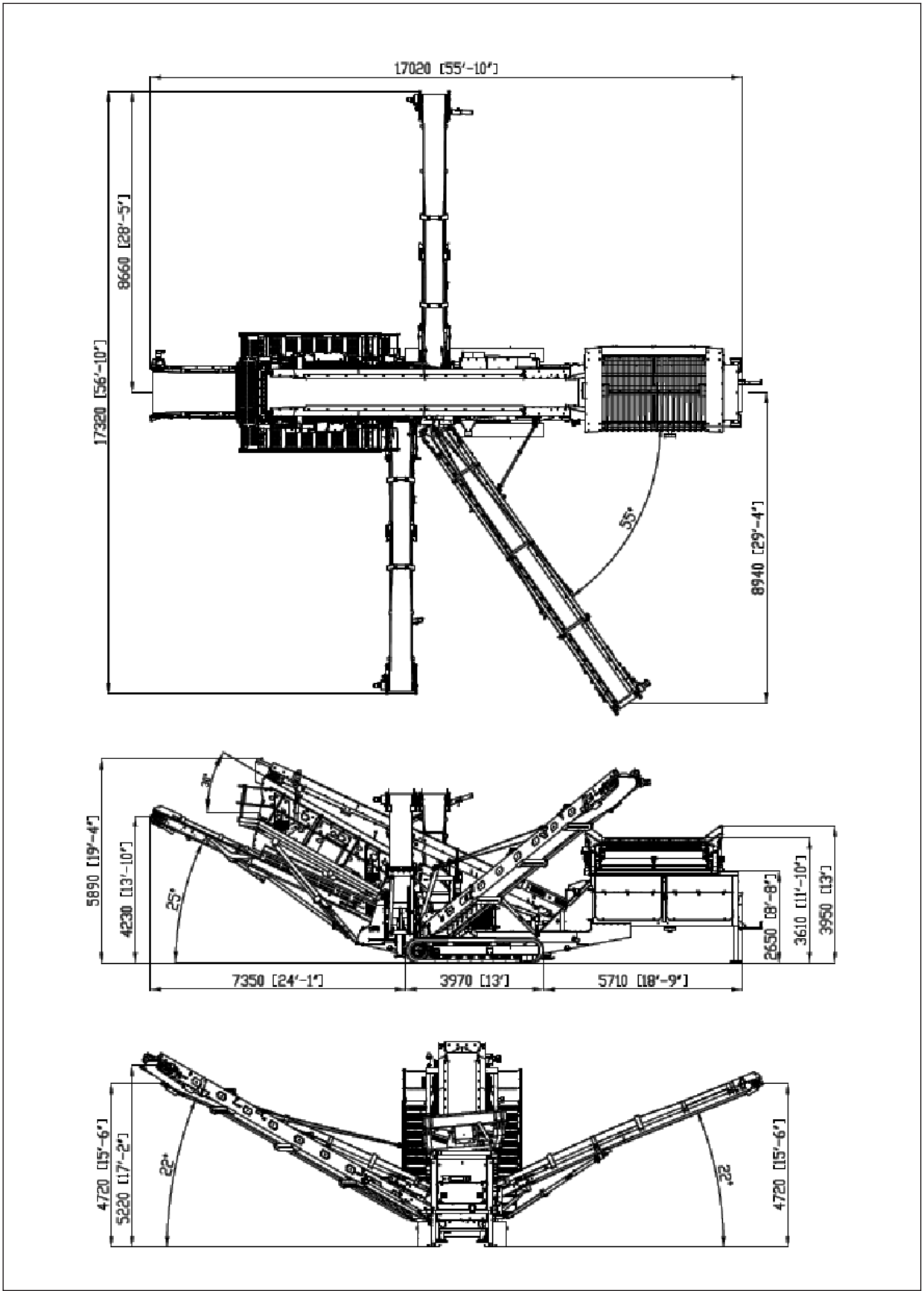

(16) 3 Deck Track Vibrating Grid Extended Length Auxiliary Conveyor Transport Position

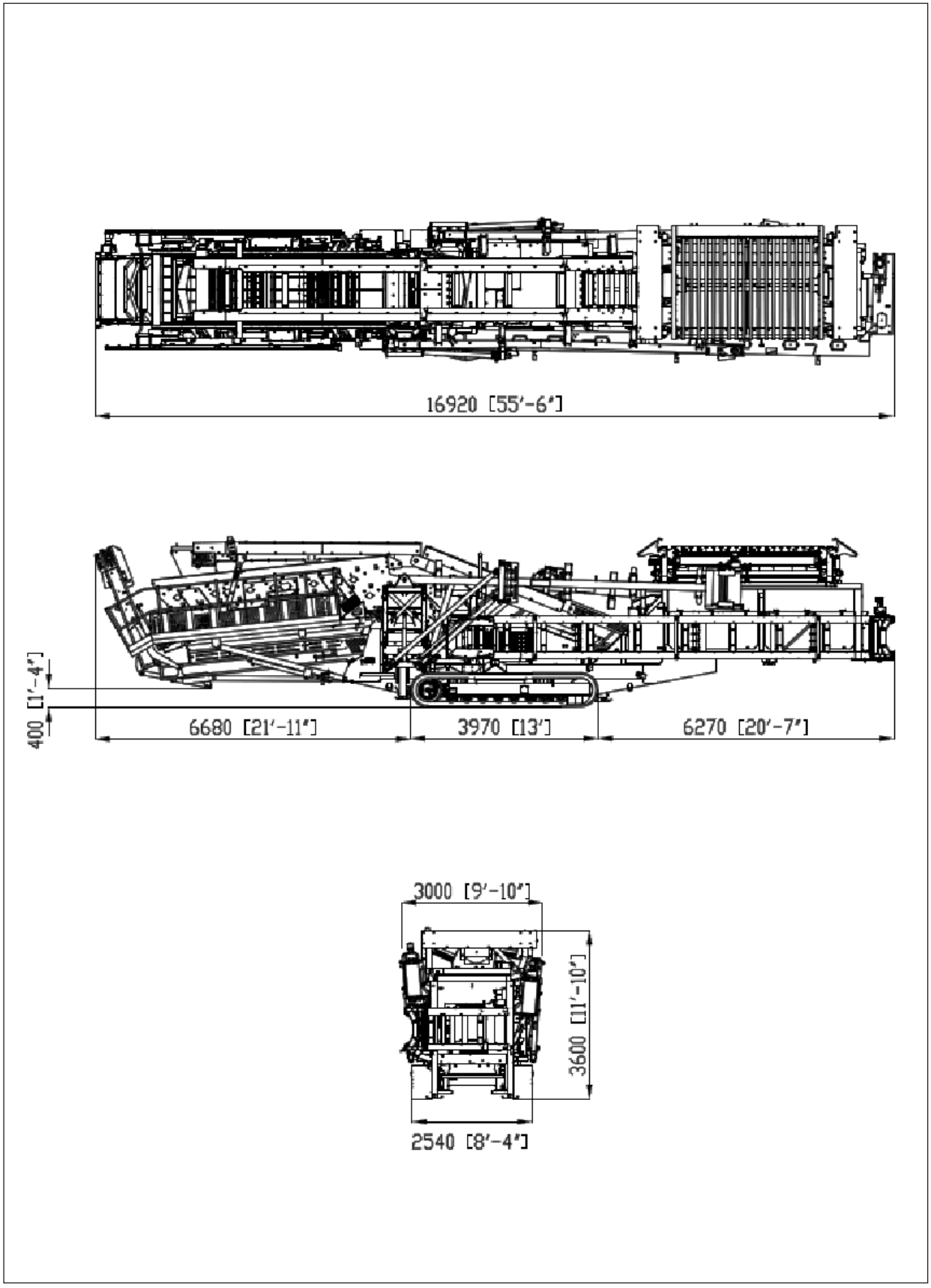

(17) 3 Deck Wheel Standard Length Auxiliary Conveyor Working Position

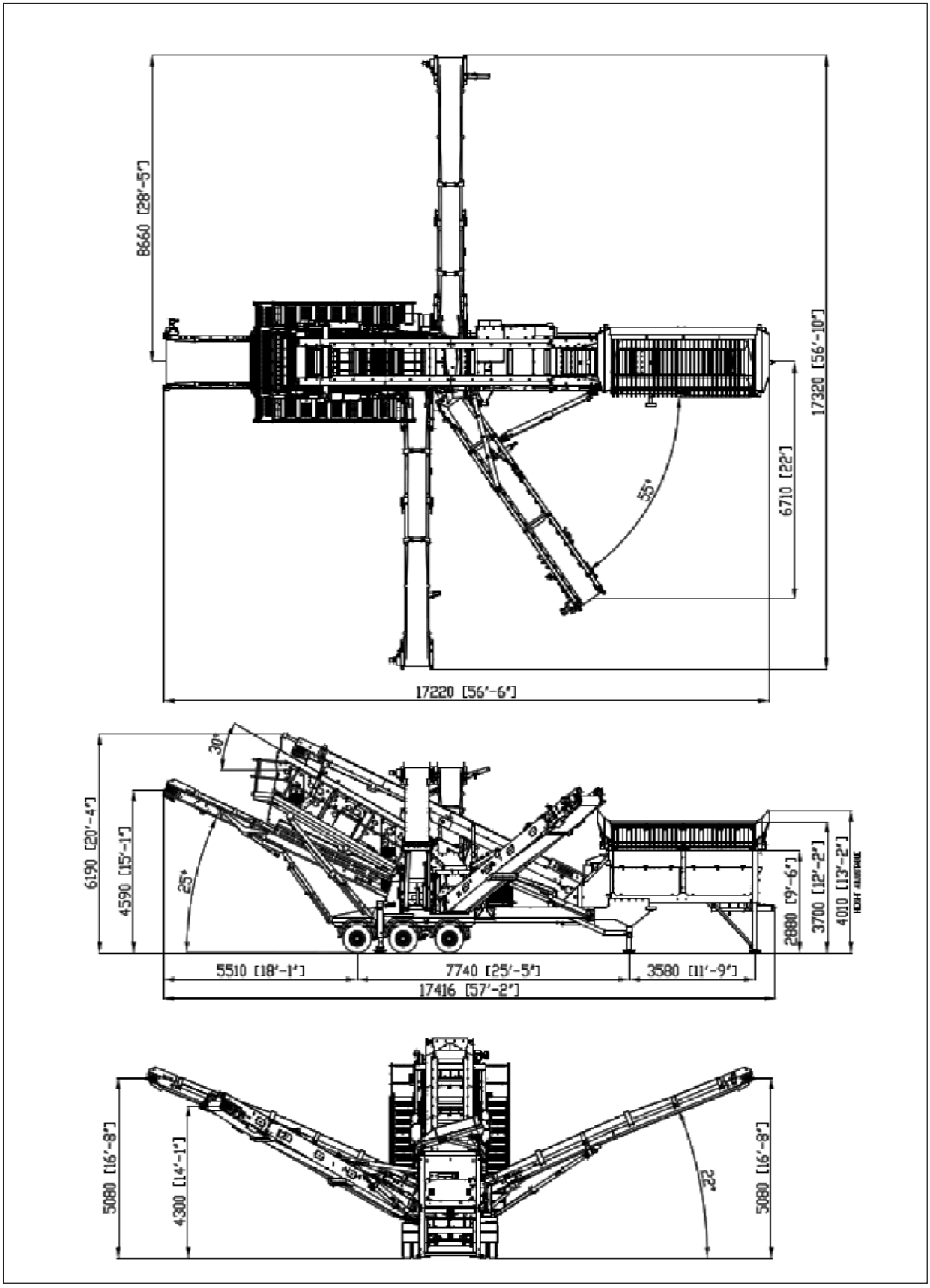

(18) 3 deck Wheel Standard Length Auxiliary Conveyor Transport Position

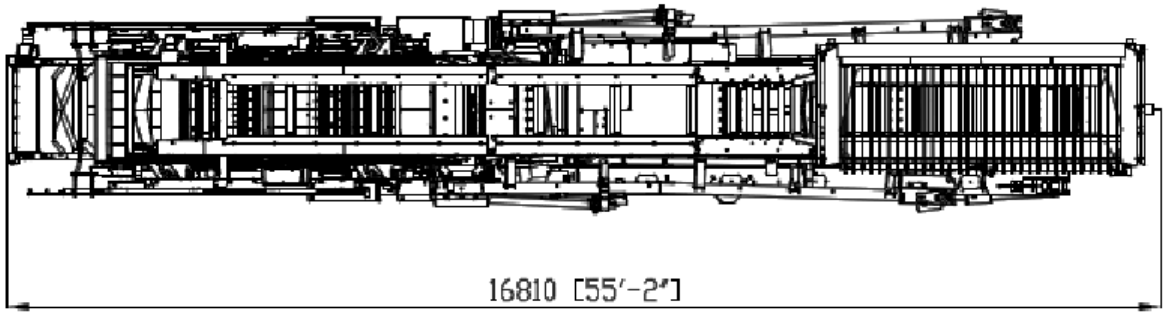

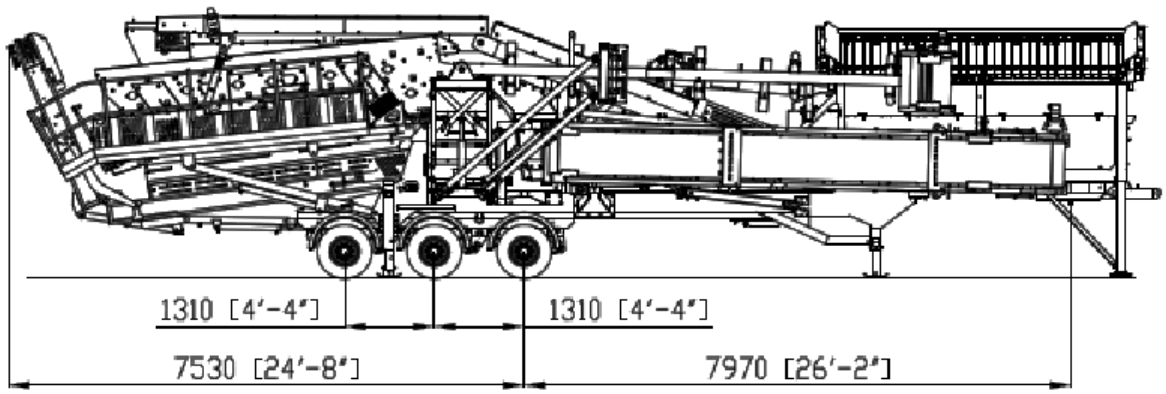

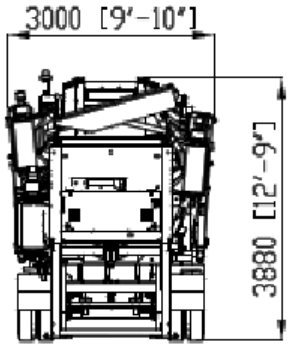

(19) 3 Deck Wheel Vibrating Grid Standard Length Auxiliary Conveyor Working Position

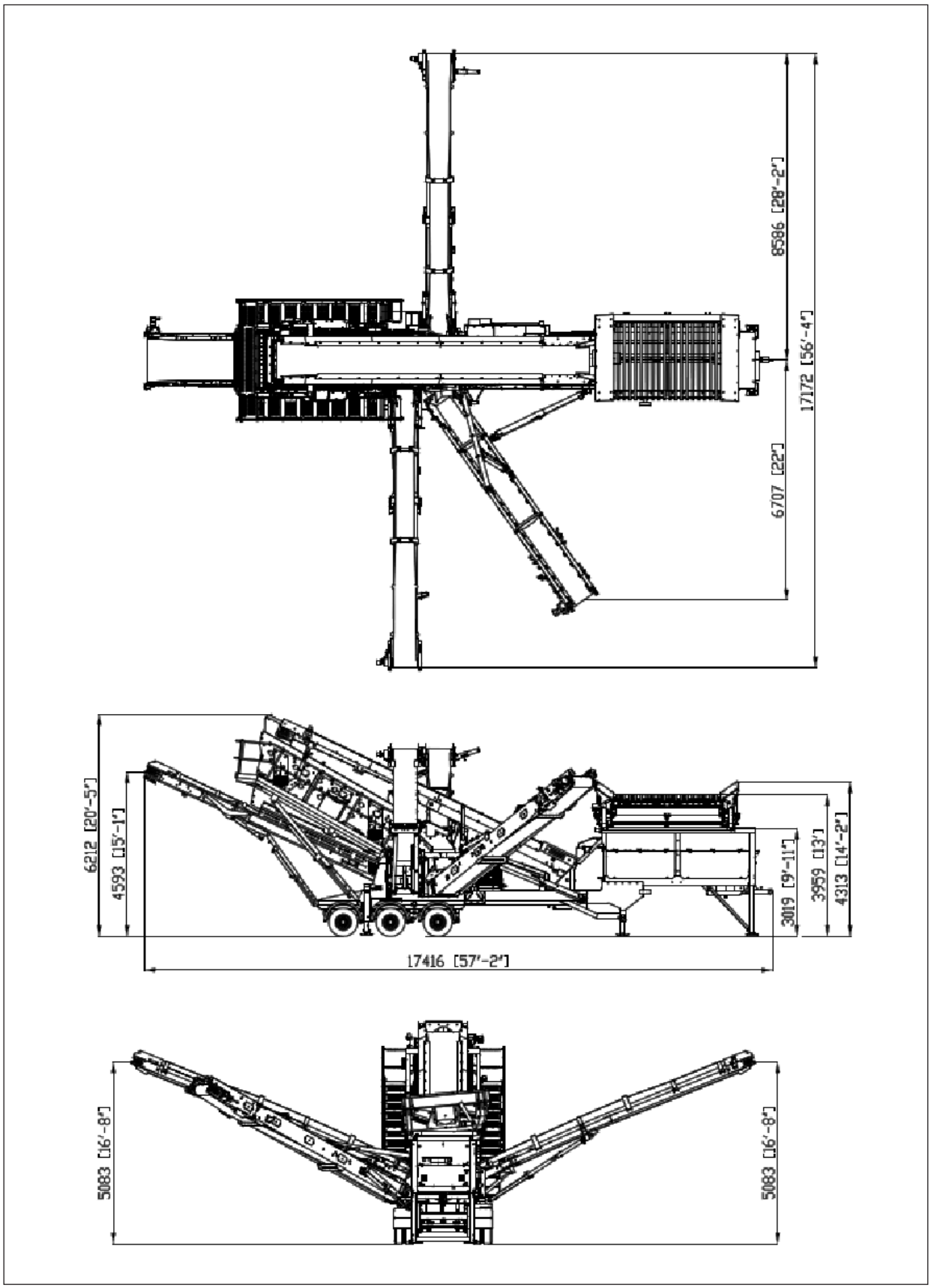

(20) 3 Deck Wheel Double Deck Vibrating Grid Standard Length Auxiliary Conveyor Transport Position

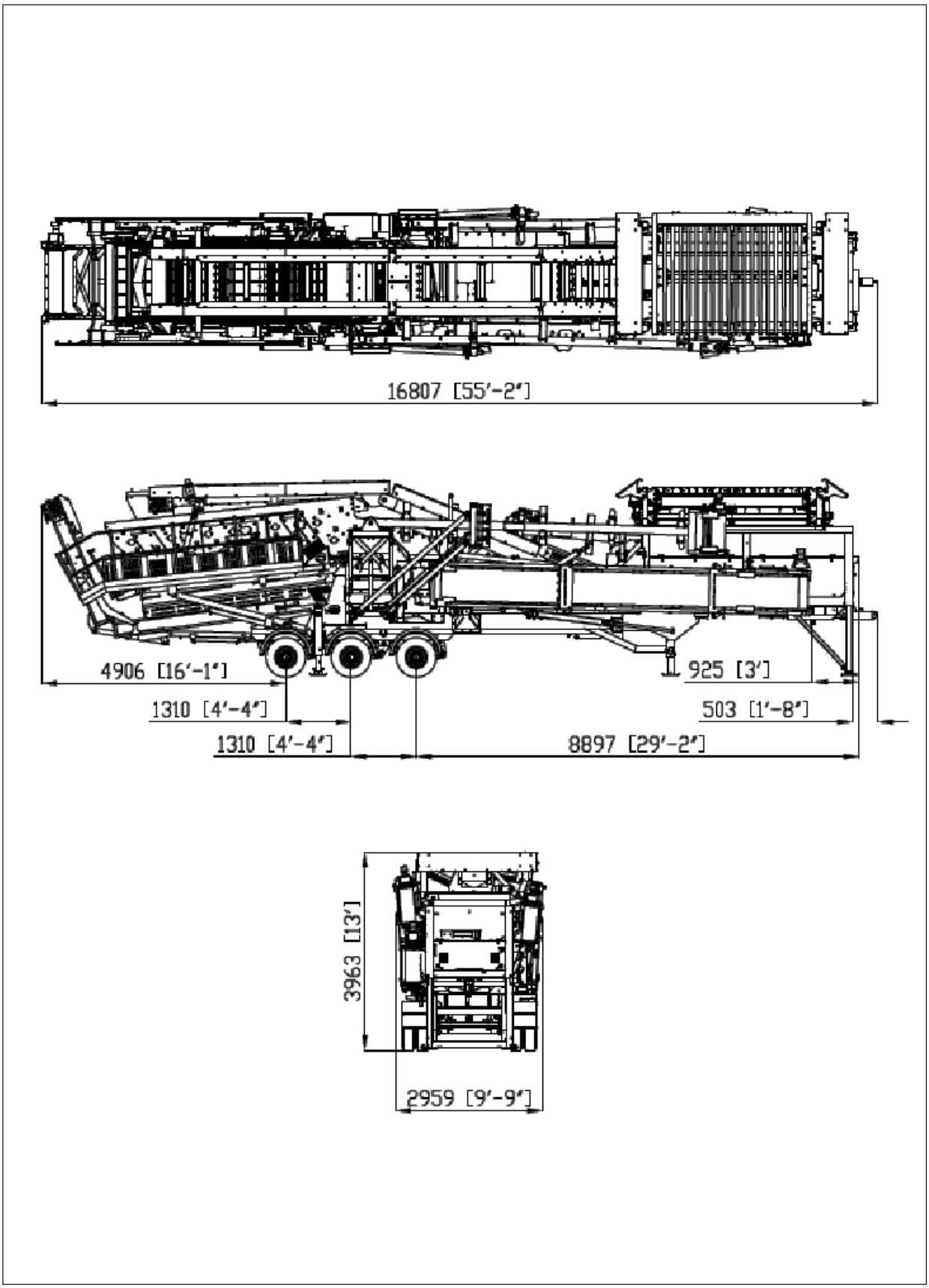

(21) Work Area Required for Machine

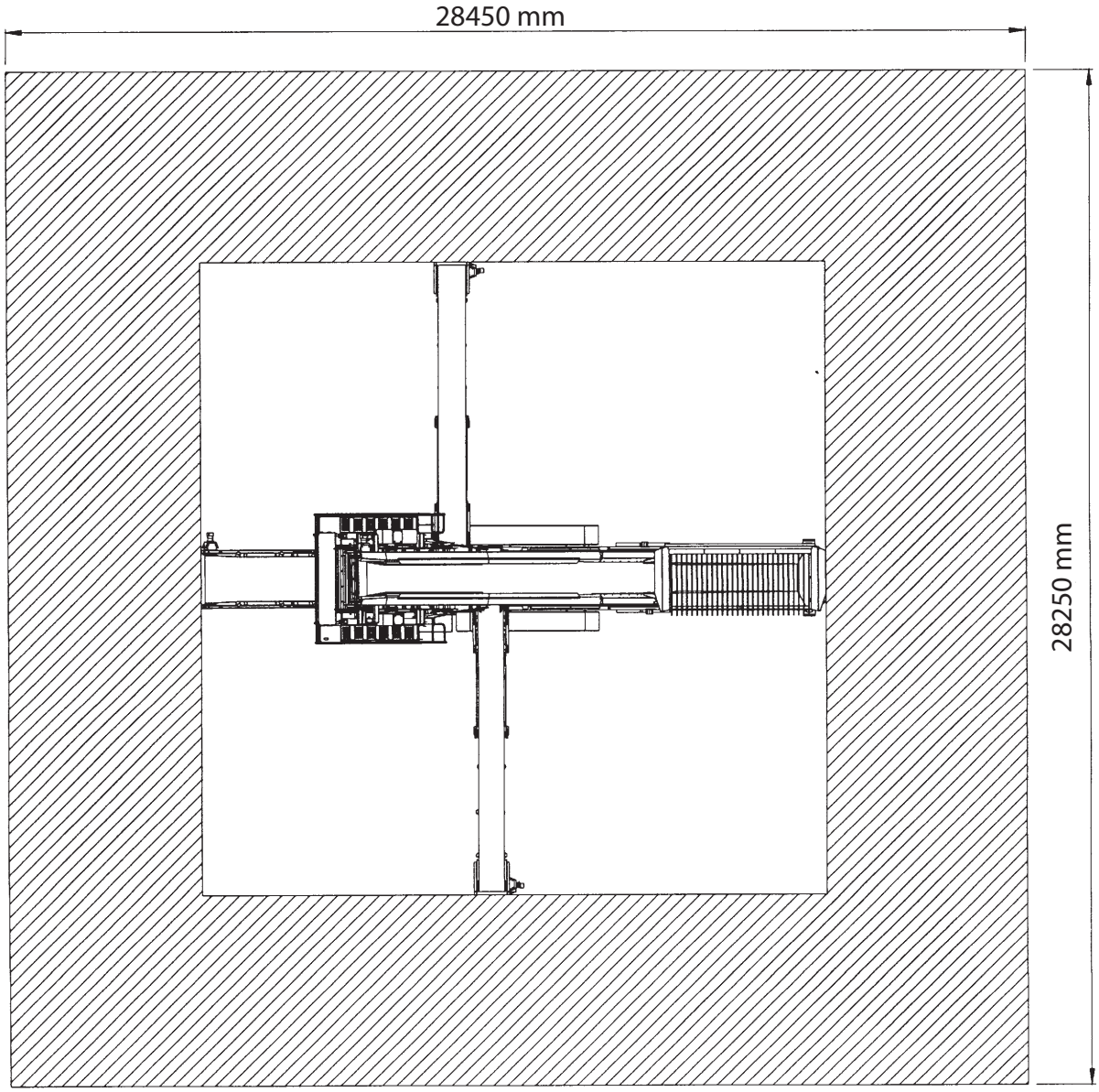

3.4 Noise Levels

NOTICE

Noise emission levels are recorded when the machine is running empty. Due to the wide variations in materials processed through the machine it is not possible to provide emission levels for all applications. Figures may differ when a machine is processing material.

Constant high noise levels ear protection must be worn.

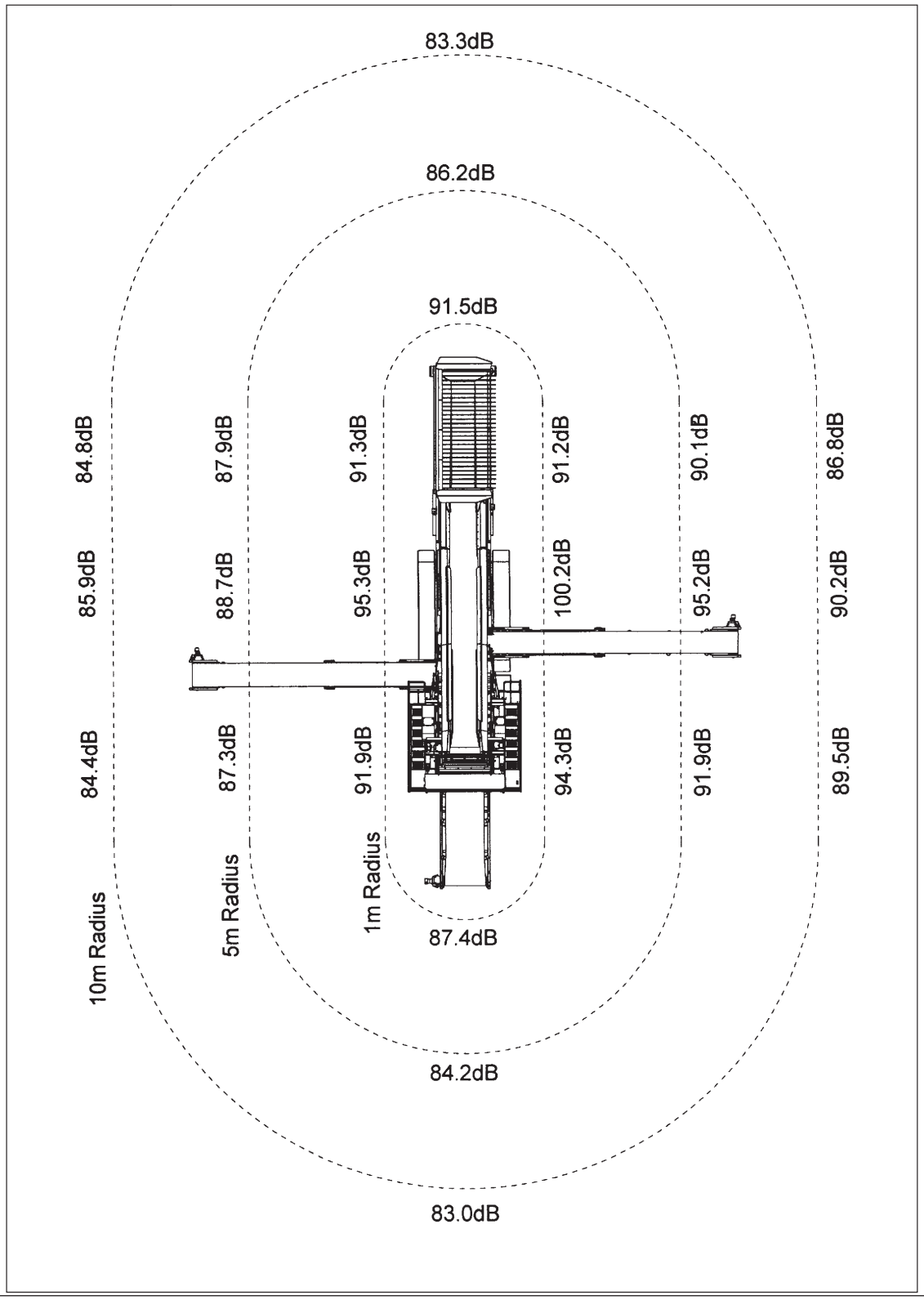

Table of Content

4 Machine Description 4-2

4.1 General Information 4-2
(1) Machine Identification Plate 4-2
(2) Machine References 4-3
4.2 Nomenclature and Technical Data 4-4
(1) Dry Option 4-4
(2) Rinser Option 4-5
4.3 Construction units 4-6
(1) Feeder Unit 4-6
(a) Reject Grid 4-7
(b) Remote Control Reject Tipping Grid 4-7
(c) The Vibrating Grid 4-8
(d) Feed Hopper 4-8
(e) Feeder Conveyor 4-9
(2) Main Conveyor 4-10
(3) Side Conveyors 4-10
(4) Auxiliary Conveyor 4-11
(a) Extended Auxiliary Conveyor 4-11
(5) Screen unit 4-12
(6) Tail conveyor 4-14
(7) Power Unit 4-14
4.4 Control and Display Elements 4-18
(1) MCU 300 Control Panel - Tier 4 4-18
(2) Tier 4 Dual Power 4-22
(a) Control Panel Component Identification 4-22
(3) Manual Tracking System 4-23
(4) Teleradio Radio Remote Tracking Kit 4-24
(5) MCU 200 Controller - Tier 3 4-25
(a) Overview 4-25
(b) Measurement Screens 4-26
(c) Alarm Management 4-28
(6) Duel Power (Tier 3) 4-30
(a) Control Panel Component Identification 4-30
(b) Control Panel Internal Component Identification 4-32
(7) Tier 3 (Including Constant Speed) 4-35
(a) Control Panel 4-35
(b) Manual Throttle 4-37
(c) Engine Pre-Heat - Standard Diesel Unit Only 4-39
(8) Tipping/Vibrating Grid Control Options 4-40
4.5 Telematics 4-42
4.6 Pictorial Decal Descriptions 4-43
(1) Machine Operations Decals 4-43
(2) Machine Information Decals 4-58

4 Machine Description

4.1 General Information

(1) Machine Identification Plate

The machine identification plate gives important information about the machine.

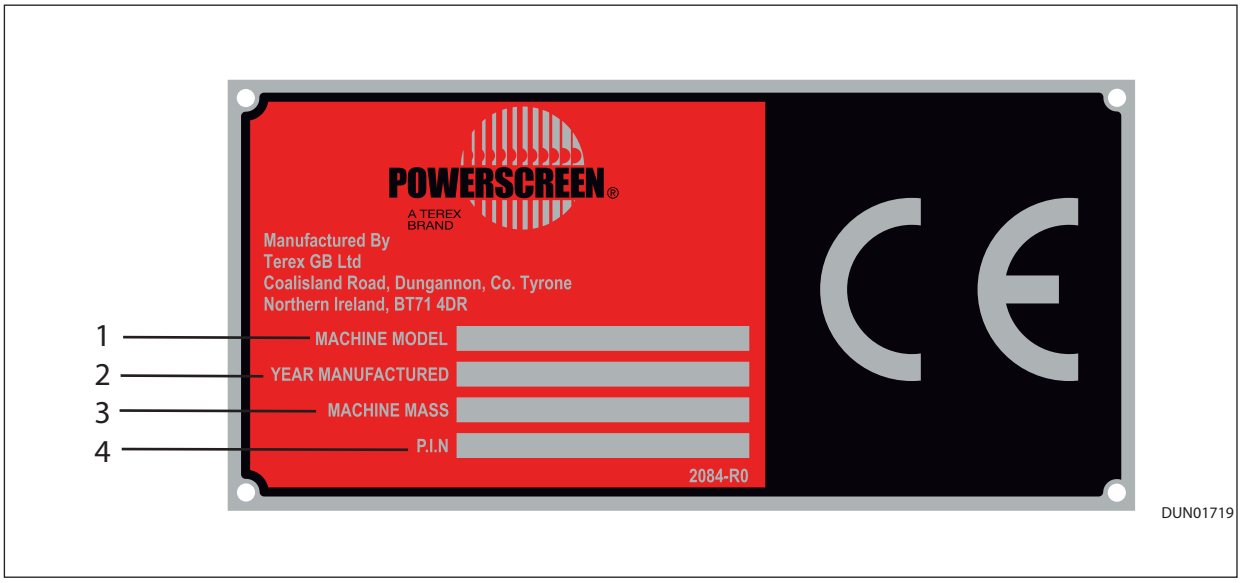

Figure 4.1 - Identification Plate

1 Machine model

2 Year manufactured

3 Machine mass

4 Serial number

(2) Machine References

When using this handbook, at all times the right and the left hand references are viewed from the hopper end of the machine. The rear of the machine is situated at the tow bar end.

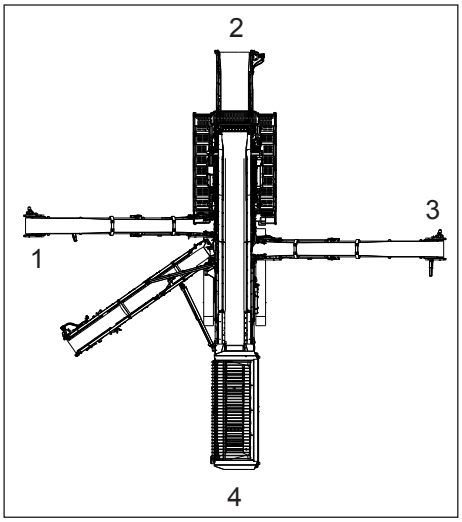

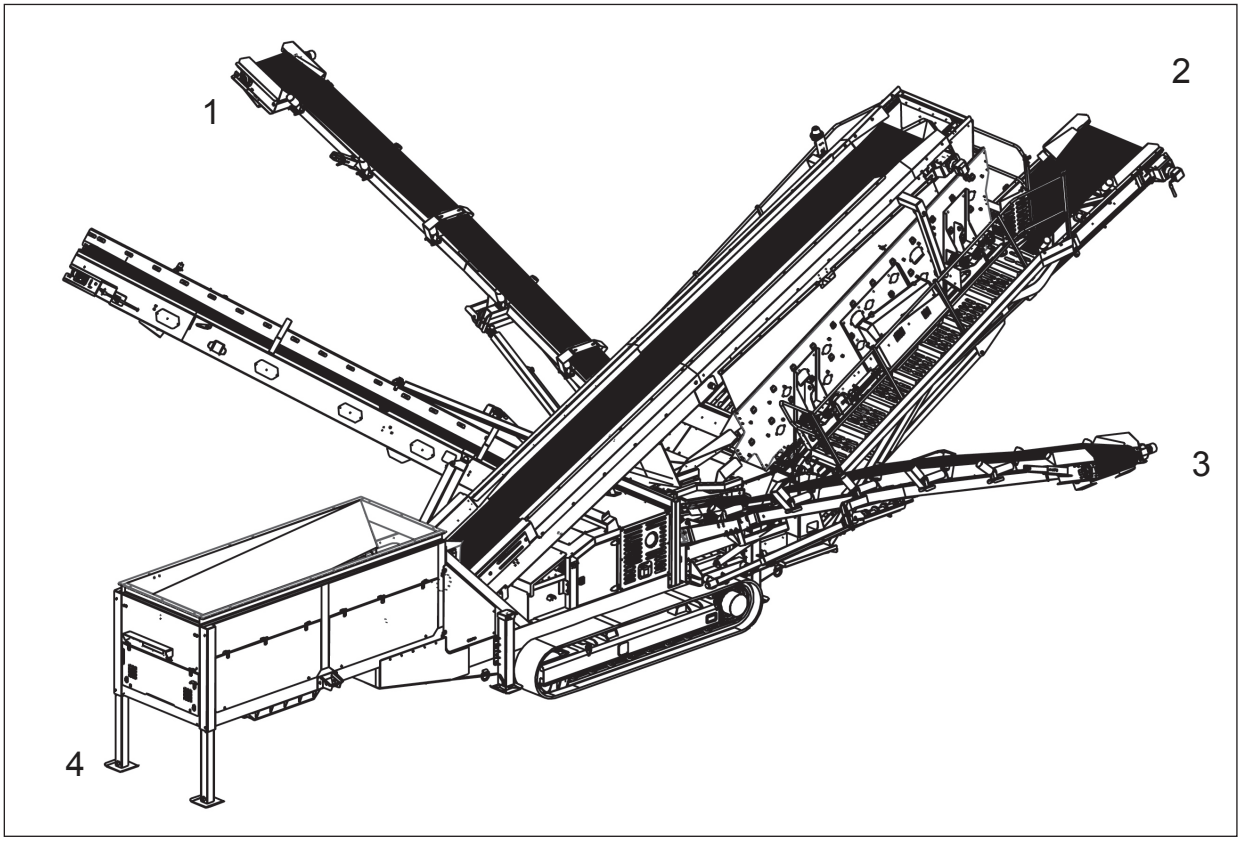

1 Left hand side

2 Front

3 Right hand side

4 Rear

4.2 Nomenclature and Technical Data

(1) Dry Option

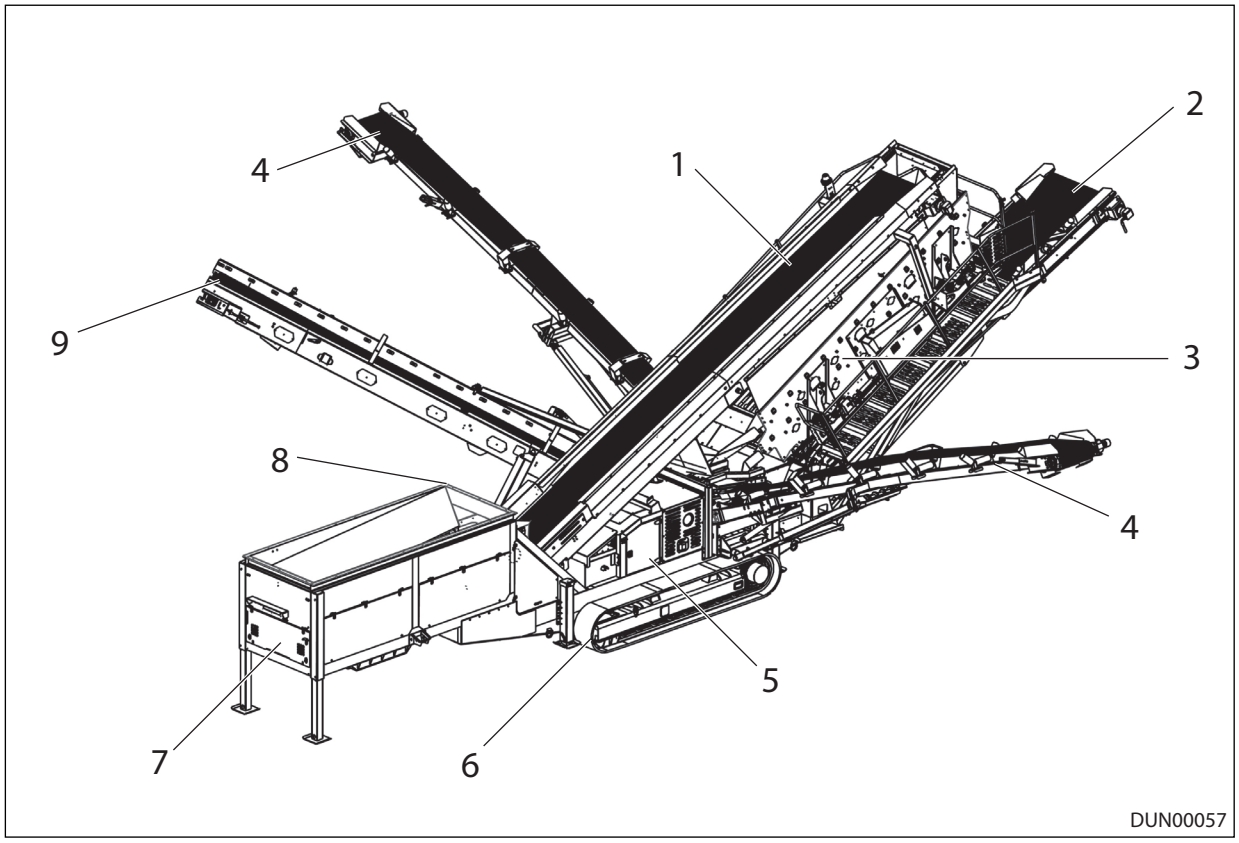

ID	Construction unit	Component
1	Main conveyor	
2	Tail conveyor	
3	Screen unit	Screen box Mesh deck
4	Side conveyors	
5	Power unit	Engine
6	Chassis	Tyres/Tracks
7	Feeder unit	Reject grid Hopper
8	Shredder	Not shown
9	Auxiliary conveyor	3 Deck only
10	Hydraulics	Not shown

(2) Rinser Option

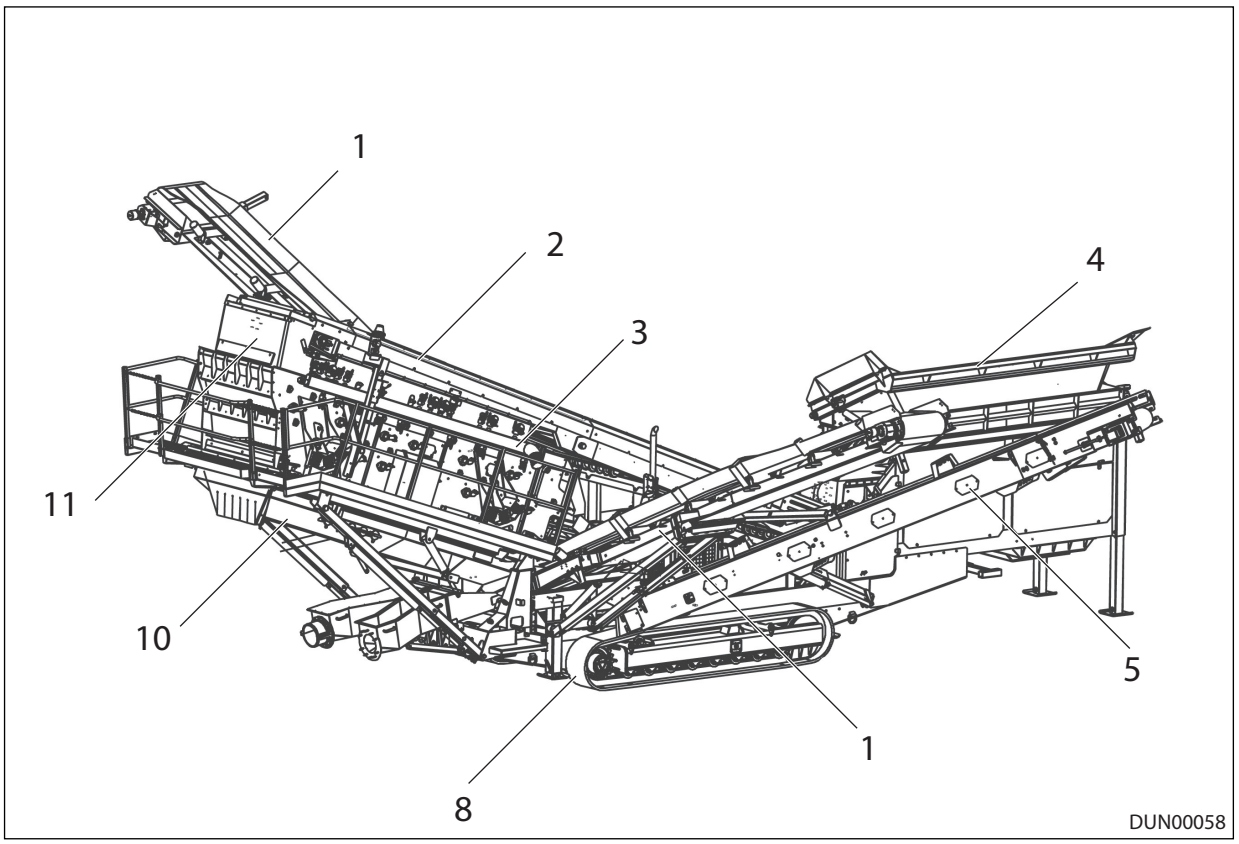

ID	Construction unit	Component
1	Side conveyors	
2	Main conveyor	
3	Screen unit	Screen box Mesh deck
4	Feeder unit	Reject grid Hopper
5	Auxiliary conveyor	3 Deck only
6	Power unit	Not shown
7	Hydraulics	Not shown
8	Chassis	Tracks
9	Shredder	Not shown
10	Washbox	
11	Catchbox	

4.3 Construction units

(1) Feeder Unit

The feeder unit consists of 3 main components:

A1a Reject grid

A1b Vibrating grid

A2 Feed hopper

A3 Feeder conveyor

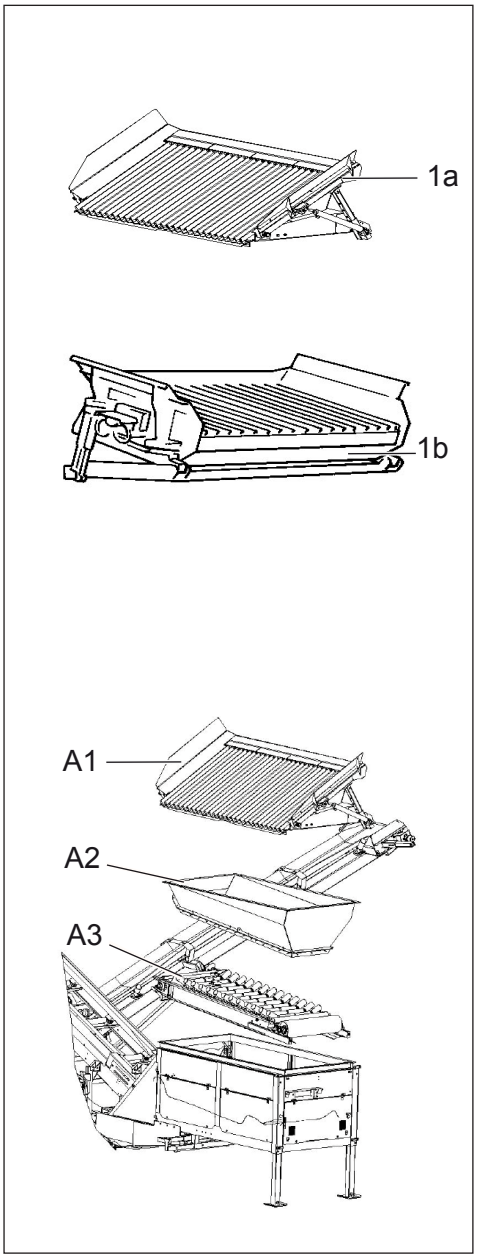

Figure 4.2 - Feeder Unit Components

(a) Reject Grid

The reject grid is attached to the machine`s feed hopper for the purpose of protecting the feeder unit and for separating big rocks and heavy material. The standard aperture is 102 mm (4'') but a 150 mm (6'') is also available. The reject grid bars are spaced at 102 mm (4'') when leaving the factory.

NOTICE

Do not adjust reject grid bars to be spaced wider than 150 mm (6'').

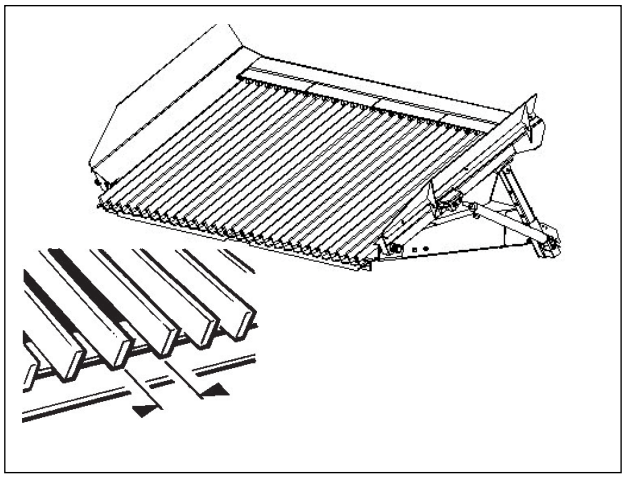

Figure 4.3 - Reject Grid

The Tipping Grid

The tipping grid is an optional piece of equipment, which is used to remove pieces of material too large to be effectively screened. In the case of the tipping grid material is fed on top of the tipping grid, material smaller than 102 mm (4"), which is the standard aperture size, will tend to fall between the bars of the tipping grid under the force of gravity. The grid is angled to allow the oversized material to fall off the tipping grid where it can typically be reprocessed. On occasions material will tend to sit on top of the reject bars, to remove this material the grid can tip.

(b) Remote Control Reject Tipping Grid

The hydraulically operated reject grid can be raised in the following way:

Operating the radio transmitter, by pointing it in the direction of the radio receiver fitted above the power unit.

The reject grid will lower automatically.

(c) The Vibrating Grid

The vibrating grid is designed for the same purpose as the tipping grid, however the efficiency of the system increases when a vibrating grid is used. Whereas the tipping grid uses gravity alone to separate the oversized from the processible material. The vibrating grid uses vibration as well. The effect of this is too ensure that little or no material rests on top of the reject bars at any time.

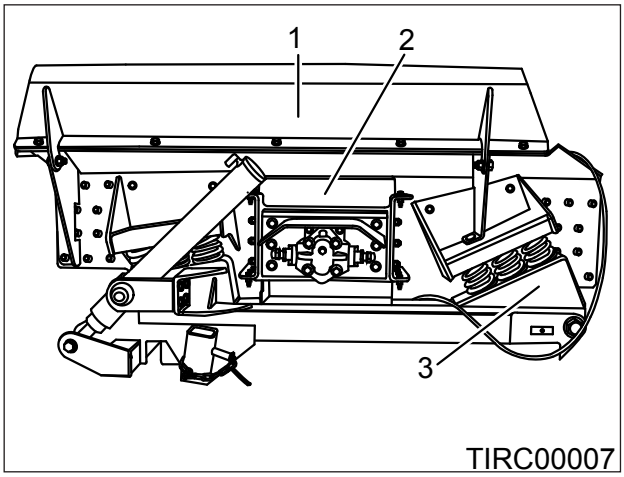

Figure 4.4 - Vibrating Grid

1 Vibrating Grid

2 Fly Wheel Cover

3 Sub Frame

(d) Feed Hopper

The 12 ft feed hopper capacity is 7 cu.m (9.15 cu.yds,) on the track machine & 7.5 cu.m (9.8 cu.yds,) on the wheel machine with clamping arrangement for rubber skirts.

The wide belt allows steep hopper sides to minimise material built-up.

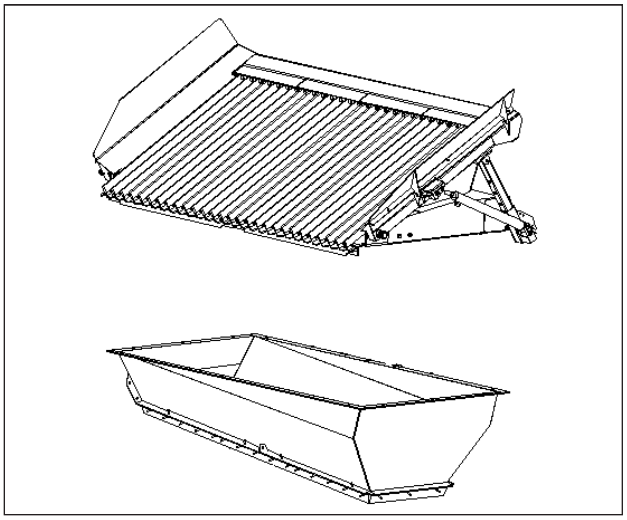

Figure 4.5 - Feed Hopper

(e) Feeder Conveyor

The feeder conveyor is attached to the machine`s feeder unit for the purpose of feeding material from the feed hopper and to the main conveyor.

The feeder belt is driven by a hydraulic motor with a variable speed gearbox adjustment to determine the feed rate. Belt tension adjustments are made outside of the guard doors.

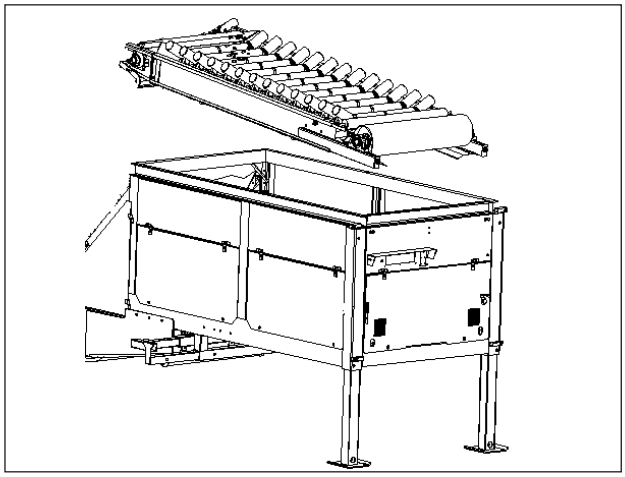

Figure 4.6 - Feeder Conveyor

Conveyor Belt Assembly

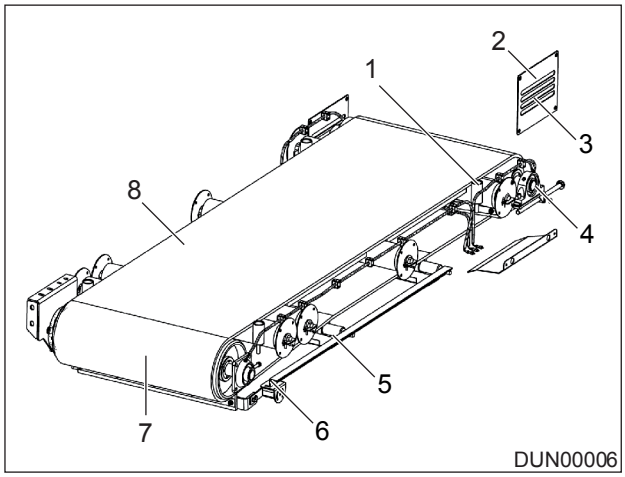

Figure 4.7 - Conveyor Belt Assembly

The conveyor belt assemblies on all machines consists of:

1 Guide rollers

2 Guarding

3 Viewing apertures

4 Tail drum

5 Impact rollers

6 Drive drum and motor

7 Belt scrapers

8 Conveyor belting

(2) Main Conveyor

The main conveyor is attached to the machine's chassis for the purpose of feeding material from the hopper to the screen unit. The main conveyor belt is driven by a hydraulic motor. It is fully skirted, belt tension adjustments can be made outside of the guard doors.

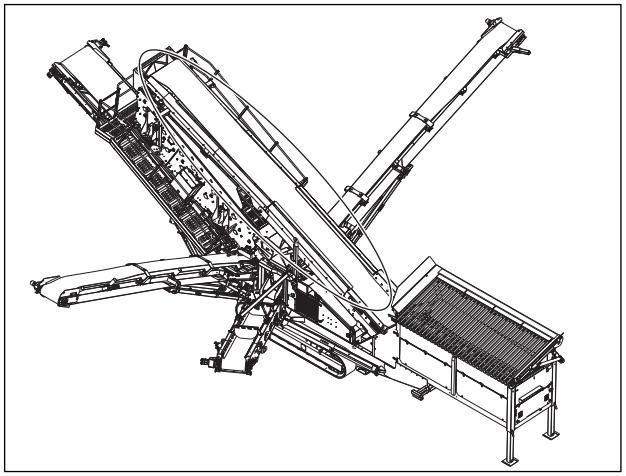

Figure 4.8 - Main Conveyor

A magnet option is available for the main conveyor.

(3) Side Conveyors

The side conveyors are attached to the machine`s chassis for the purpose of feeding material from the screen unit to stockpile.

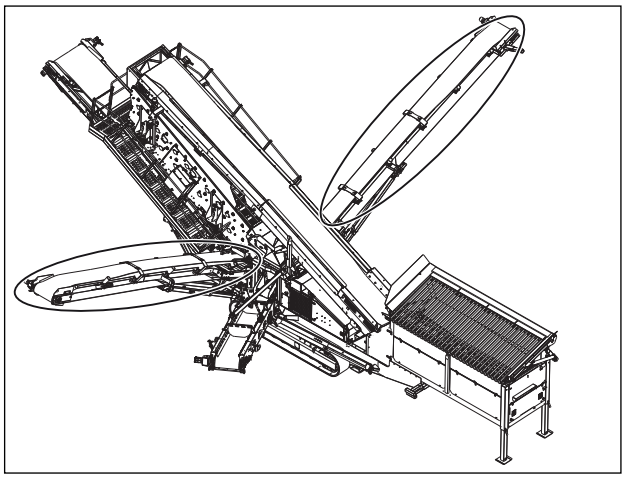

Figure 4.9 - Side Conveyors

(4) Auxiliary Conveyor

The auxiliary conveyor is attached to the machine`s chassis for the purpose of feeding material from the screen unit to stockpile.

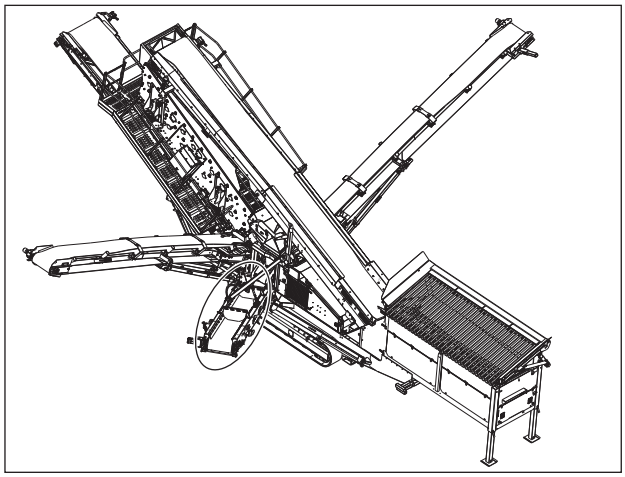

Figure 4.10 - Auxiliary Conveyor

(a) Extended Auxiliary Conveyor

This is an extended version of the auxiliary conveyor and must be mounted on the machine using lifting equipment.

(5) Screen unit

The screen unit is the single most important component on the machine and must be considered the heart of the machine. The CHIEFTAIN 1700 is equipped with a 16‘ x 5‘ (4.8 m x 1.55 m), triple deck, grease filled 2 bearing system or a 16‘ x 5‘ (4.8 m x 1.55 m) double beck, grease filled 2 bearing system. Both options have a 14‘ x 5‘ (4.2 m x 1.55 m) bottom deck.

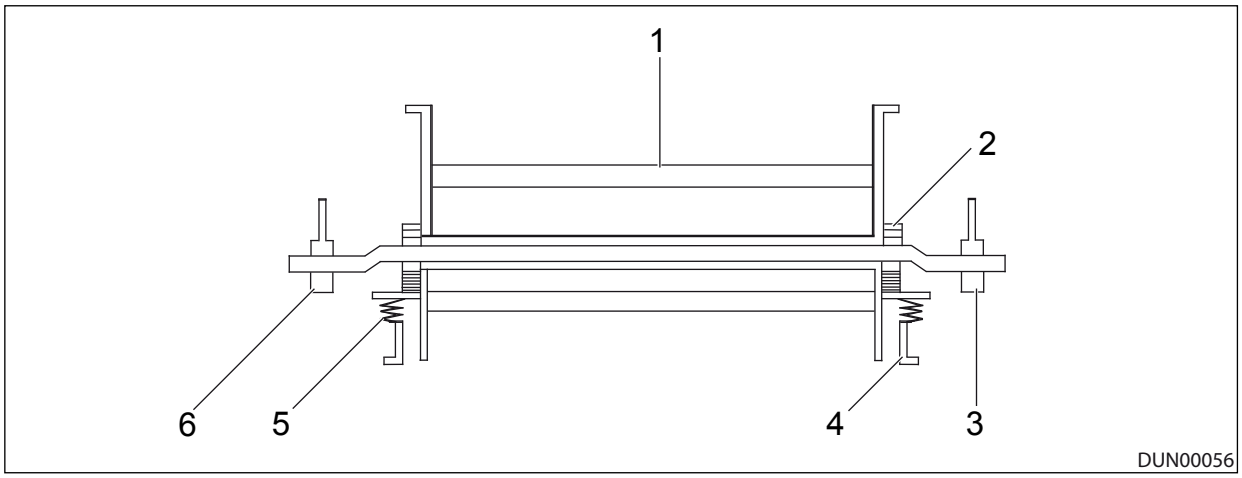

1 Screenbox

2 Bearing

3 Flywheel

4 Sub-Frame

5 Springs

6 Eccentric Shaft

The screen unit is attached at the end of the main conveyor where it screens raw material into different sizes. The screen unit is belt driven. The screenbox angle is changed by raising or lowering the screenbox hydraulically. To prepare for operation, raise the screenbox. To prepare for transport, lower the screenbox.

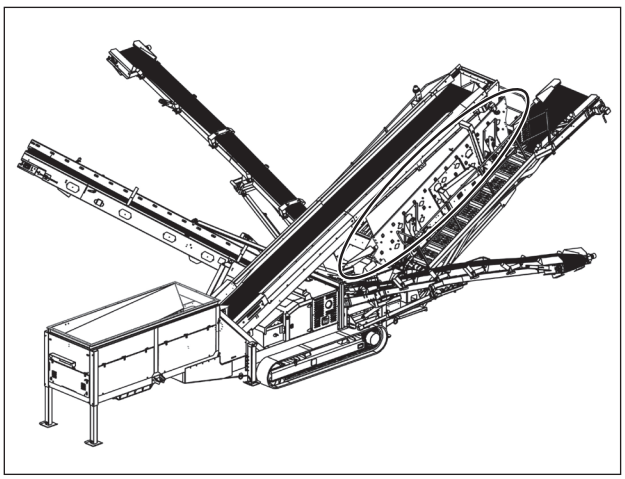

Figure 4.11 - Screen Unit

This is a two-bearing screenbox which gives three-way separation of raw material. Meshes and speed harps of differing sizes are available to cater for all applications.

The anti rock stays (8) are removed after machine has been set up in position on the site,

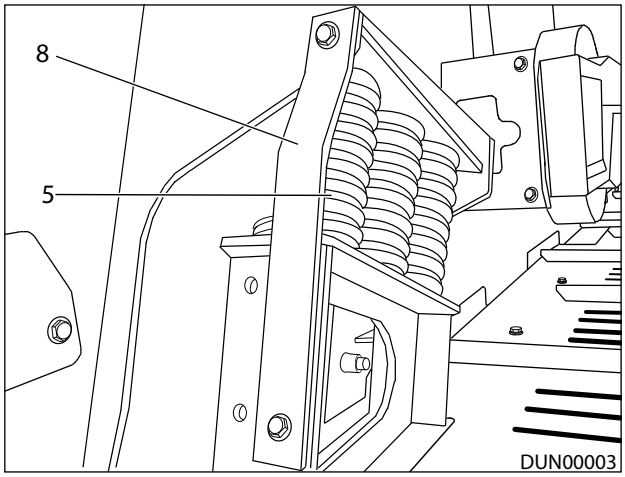

Figure 4.12 - Screen Unit Anti-Rock Stays

The screen unit consists of a 2/3 deck screenbox fitted with 2 flange mounted bearings on an eccentric shaft. The outer ends of the screen shaft is fitted a flywheel complete with weights and pulley. The screen shaft is driven from the motor fitted on the subframe by three pulley belts The subframe in turn is rigidly connected to the chassis of the machine. Screen springs are used to support the box totally on this new system.

(6) Tail conveyor

The tail conveyor is attached to the front chassis for the purpose of feeding the fines material from the screen. The conveyor is hydraulically opened to the working position and retracted to ground level, facilitating quick machine set up and shut down. The tail conveyor belt is driven by a hydraulic motor.

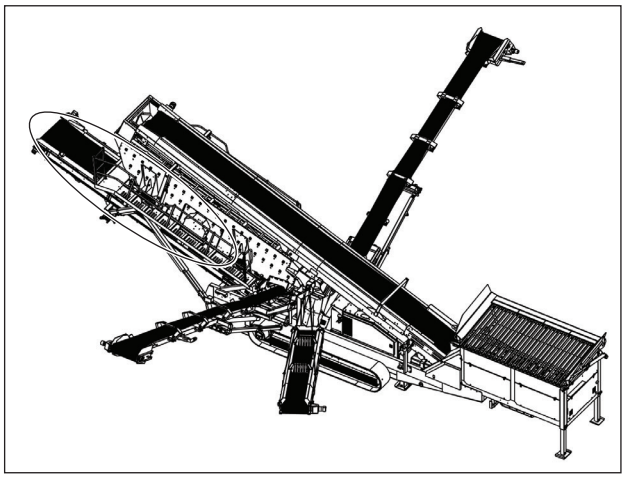

Figure 4.13 - Tail Conveyor

(7) Power Unit

The power unit is attached at the chassis of the machine, under the main conveyor. The power unit is completely enclosed, sound suppressed and lockable.

The machine has ten control units.

The control panel (Item 1), control valve unit (Item 2) and hand throttle (Item 3), if fitted, are situated at the power unit on the right hand side of the machine. Control panels may vary depending on the machine.

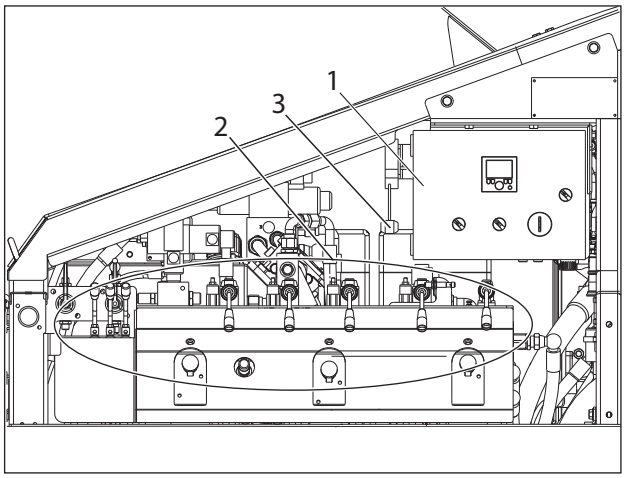

Figure 4.14 - Power Unit

The control valves (G4 & G5) are situated at the front of the machine. They can be found to the right hand and left hand sides respectively, under the foot plates.

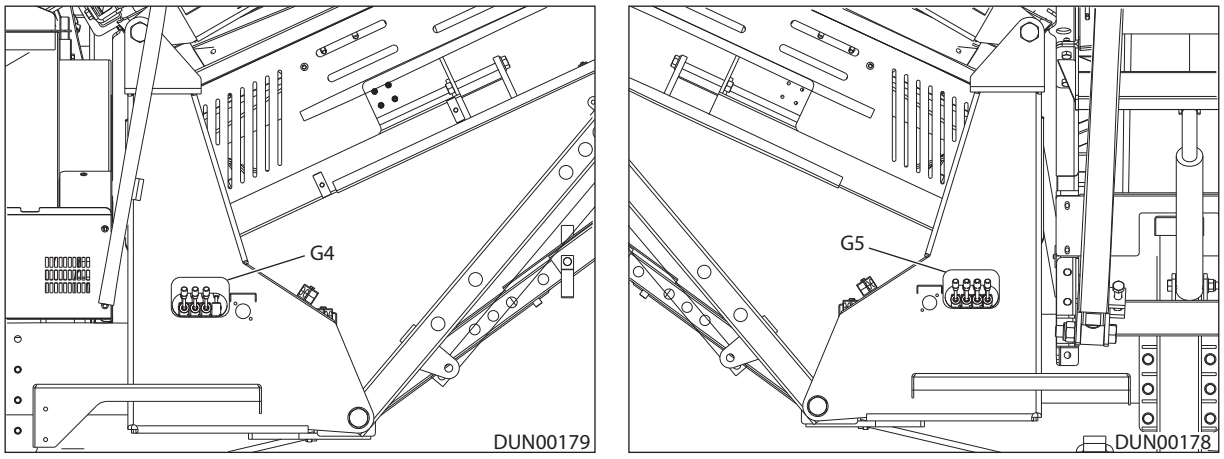

Figure 4.15 - Control Valve Units (G4 & G5)

The control valve (G6) is situated at the front of the machine on the maintenance platform.

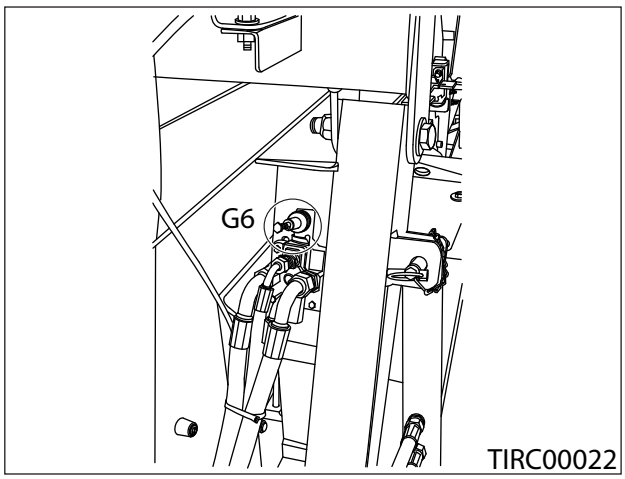

Figure 4.16 - Control Valve Unit (G6)Track Machine Only

Track Machine Only

The tracking control handsets (G7 & G8) are independent control units. They control the movement of the tracks.

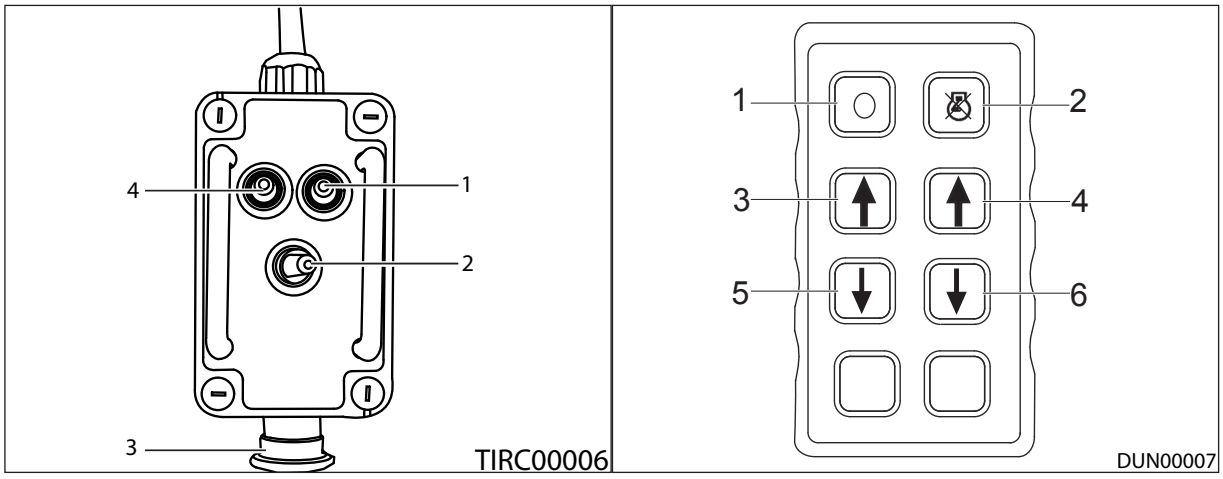

Figure 4.17 - Tier 3 Tracking Control Handsets

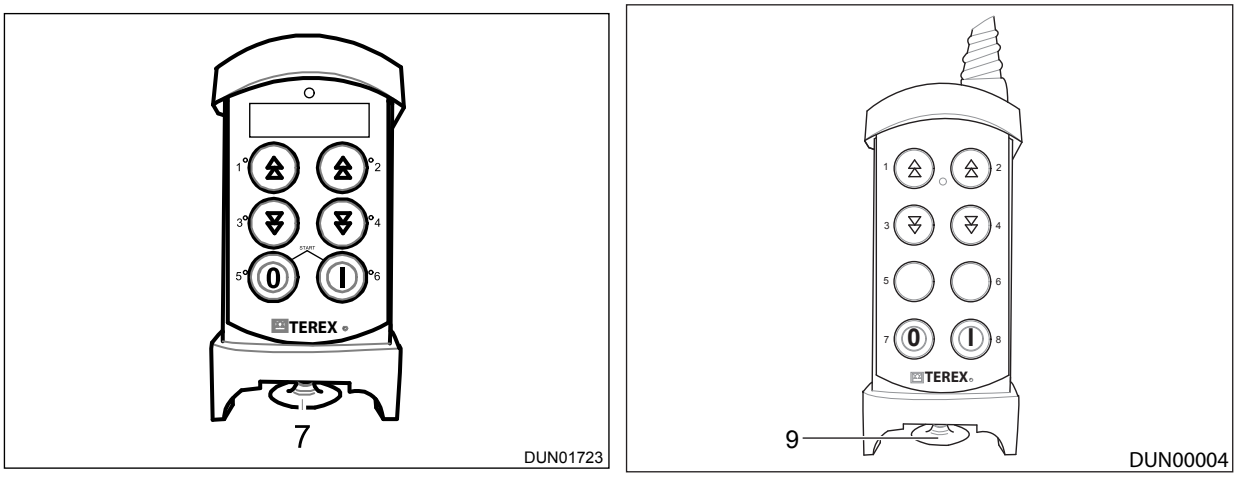

Figure 4.18 - Tier 4 Tracking Control Handsets

The Roll in Bogie has an additional control bank (G9), that controls the jacking legs required for the bogie.

Electric control panel (Panels will vary depending on machine).

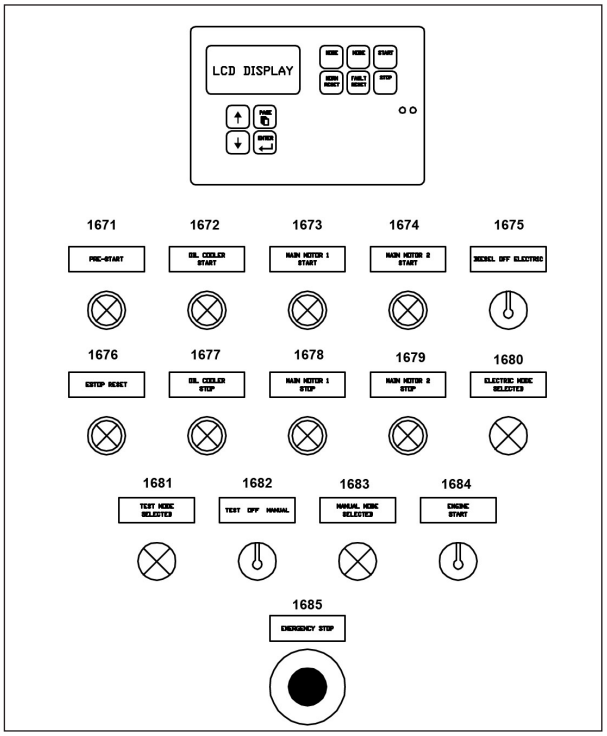

Figure 4.19 - Tier 3 MCU 200 Dual Power Control Panel

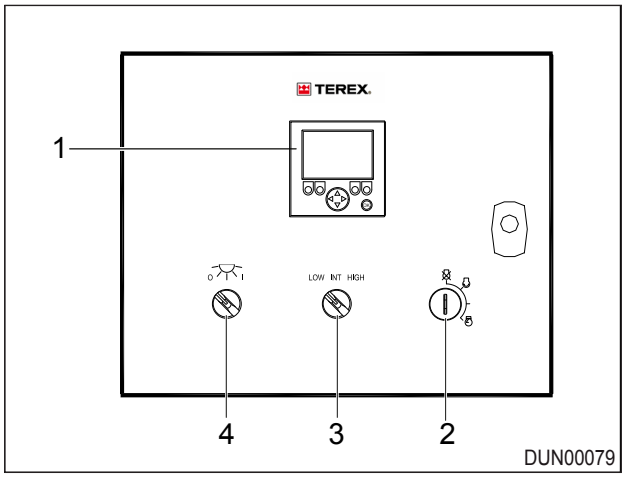

Figure 4.20 - MCU 300 Control Panel

4.4 Control and Display Elements

(1) MCU 300 Control Panel - Tier 4

The main hydraulic control panel, fitted at ground level, has all the controls centrally located. This allows the operator to quickly and easily optimize production preventing unnecessary downtime. There is a display screen on the control panel which indicates the current state of the machine.

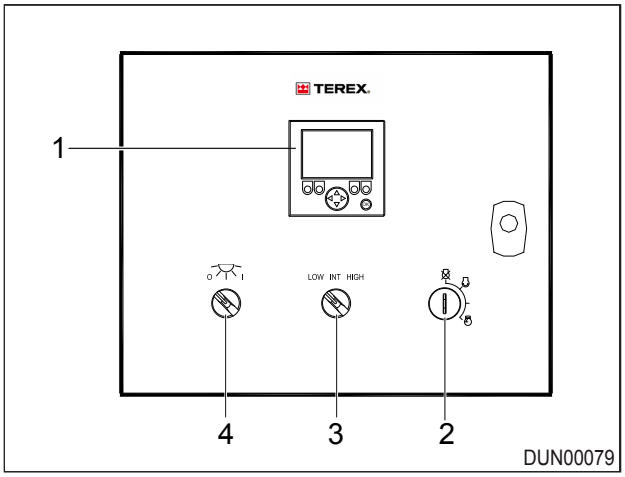

Figure 4.21 - MCU 300 Control Panel

1 MCU 300 Control panel display screen

2 Ignition switch

3 Engine speed switch

4 Powerunit light

When the ignition switch is turned to the ON position the Home Screen (Wait To Start) is displayed on the control panel display screen, this screen will only stay on for a few seconds until the engine warms up.

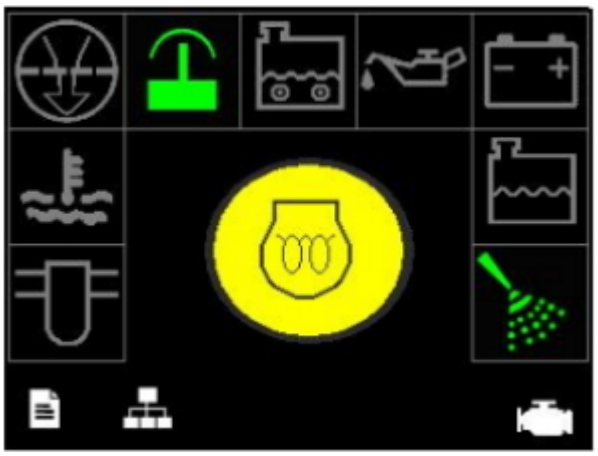

Figure 4.22 - Home Screen (Wait To Start)

When the engine is warmed up the Home Screen is displayed on the control panel display screen.

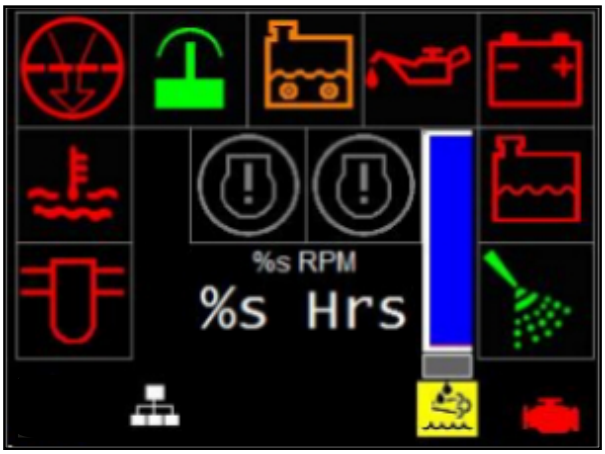

Figure 4.23 - Home Screen (No faults)

The total engine run hours are displayed in the centre of the home screen (Item 12).

Refer to Chapter 7 for more information on the operation of the MCU 300 Control Panel.

If there are active faults these will be displayed on the home screen, Reference: Figure 4.24. An indicator light on the control panel display screen will illuminate when a machine fault occurs. The light or lights which illuminate will depend on the fault, Reference: Table 4.1.

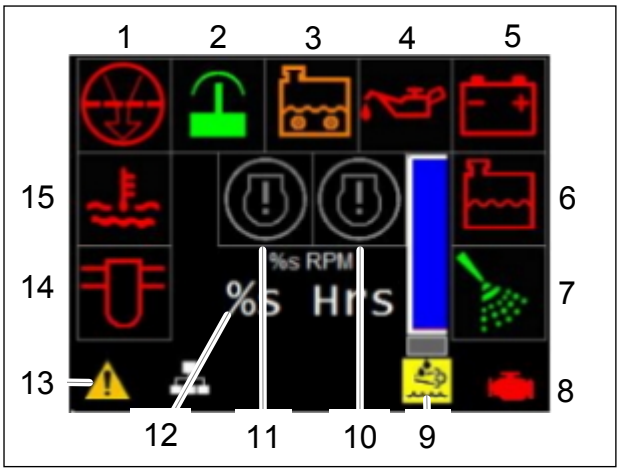

Figure 4.24 - Home Screen (Faults)

Table 4.1 - Display Screen Fault Codes

ID	Name	Description
1	**AIR FILTER RESTRICTION LAMP**	RED – Air Filter Blocked AMBER – Blockage Removed (Machine key off/on needed to reset fault) SPN – 107
2	**EMERGENCY STOP LAMP**	RED (Flashing) – ESTOP Activated AMBER – ESTOP Healthy (Machine key off/on needed to reset fault) GREEN – ESTOP Healthy

ID	Name	Description
3	**HYDRAULIC OIL LEVEL LOW LAMP**	RED – Hydraulic oil level low AMBER – Level Healthy (Machine key off/on needed to reset fault)
4	**OIL PRESSURE LAMP**	RED – Engine Oil Pressure High SPN – 100
5	**BATTERY LAMP**	RED – Battery voltage low (Alternator not Charging)
6	**COOLANT LEVEL LAMP**	RED – Engine Coolant level low SPN – 111
7	**FUEL SOLENOID LAMP**	GREEN – Fuel Solenoid Engaged
8	**ENGINE INFORMATION**	Click to access the engine information screen If flashing red then a DM1 code is present
9	**UREA LEVEL**	Monitors the Adblue level in the tank. When the engine senses a low level the yellow symbol will flash and the bar at the bottom of the level will flash red. SPN – 5245
10	**ENGINE SHUTDOWN LAMP**	RED – The shutdown lamp is used to warn the operator of the presence of critical active Engine Diagnostic Codes that necessitate the engine to possibly derate and shutdown. There are 2 levels, solid and flashing, flashing indicates a more severe fault. FLASHING: SPN – 3039 SOLID: SPN – 623
11	**ENGINE WARNING LAMP**	AMBER – The warning/diagnostic lamp is used to warn the operator of the presence of an active Engine Diagnostic Code. There are 2 levels, solid and flashing, flashing indicates a more severe fault. FLASHING: SPN – 3038, 3040 & 3041 SOLID: SPN - 624 & 987
12	**ENGINE HOURS**	Monitors the engine total hours of operation SPN – 247
13	**ACTIVE ALARM**	Symbol will flash when there is an active alarm, Machine key on/off will be required to clear the symbol once fault has been fixed.
14	**FUEL CONTAMINATION LAMP**	RED – Engine Fuel Filter has detected contamination (Water/Dirt) SPN – 97
15	**ENGINE TEMPERATURE LAMP**	RED – Engine temperature High SPN – 110

* The SPN number indicates the fault code.

The control panel also displays an engine fault screen if there is a problem with the engine.

Figure 4.25 - Engine Fault Screen

Refer to the table in the Troubleshooting section for a list of the engine fault codes. Refer to the engine manufacturer's manual or your local dealer for more information.

(2) Tier 4 Dual Power

(a) Control Panel Component Identification

Figure 4.26 below shows the dual power control panel as used on mobile machines. Control panels may vary. Table 4.2 identifies each component on the control panel door.

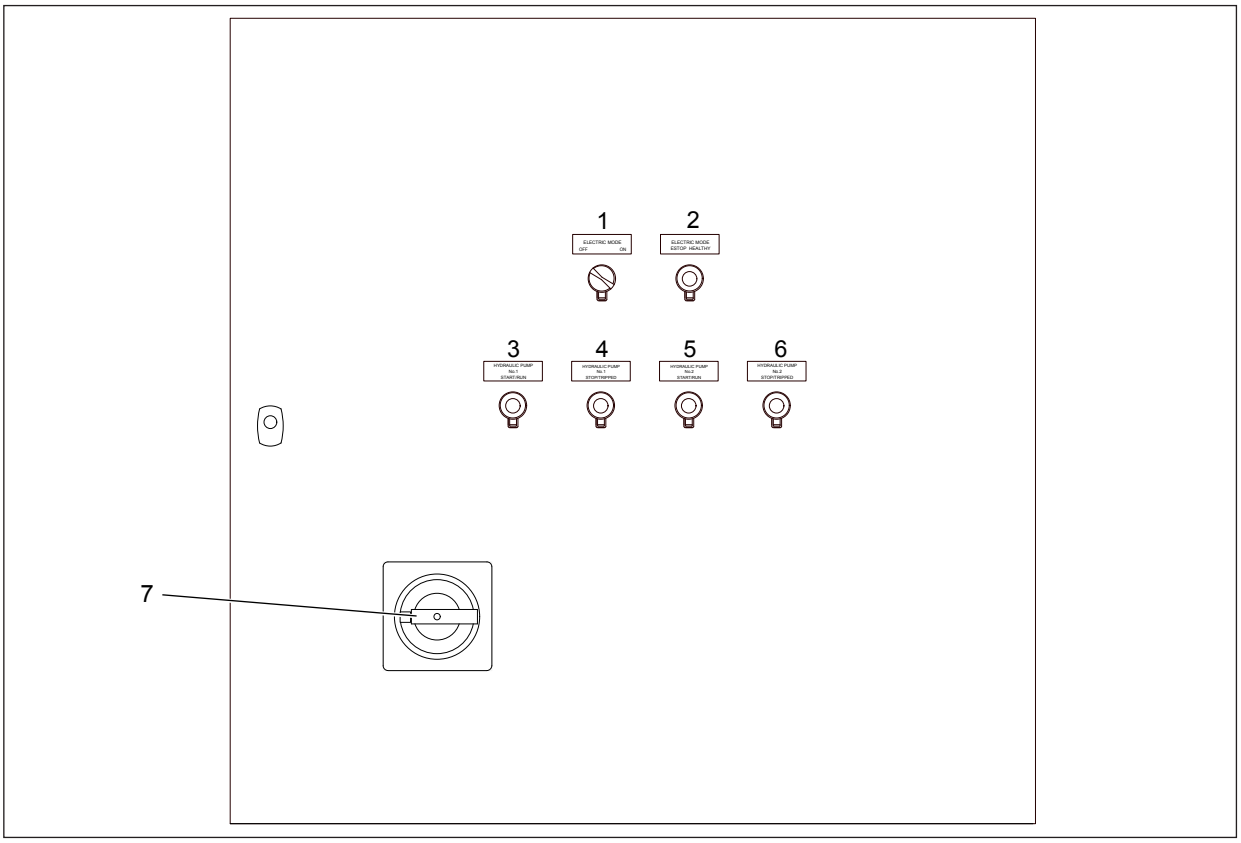

Figure 4.26 - Tier 4 Dual Power Control Panel

Table 4.2 below gives the description of the various switches and lamps on the tier 4 dual power control panel door.

Table 4.2 - Tier 4 Dual Power Control Panel Door Component Identification

ID	Description
1	Electric mode ON/OFF switch
2	Electric mode E-stop healthy
3	Hydraulic pump No. 1 Running
4	Hydraulic pump No. 1 Tripped
5	Hydraulic pump No. 2 Running
6	Hydraulic pump No. 2 Tripped
7	Main Isolator Switch

(3) Manual Tracking System

Figure 4.27 below shows the new Manual Tracking Umbilical Layout.

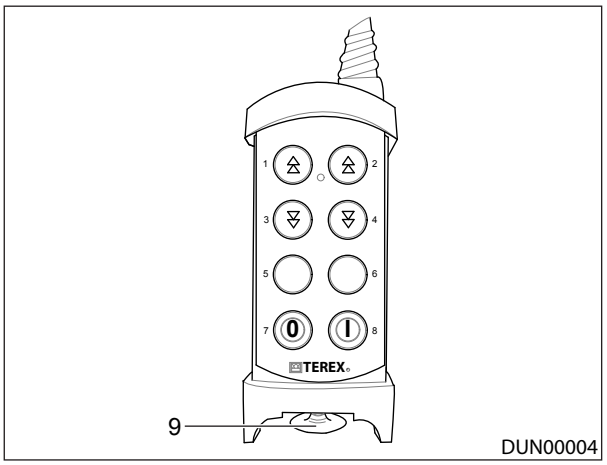

Figure 4.27 - Tracking Umbilical Layout

The table below gives a description of each button on the tracking umbilical shown above.

Table 4.3 - Tracking Umbilical Layout

ID	Description
1	Left Track Forward
2	Right Track Forward
3	Left Track Reverse
4	Right Track Reverse
5	Unused
6	Unused
7	Stop Tracks
8	Start Tracks

(4) Teleradio Radio Remote Tracking Kit

Figure 4.28 below shows the Teleradio Radio Remote Tracking transmitter layout.

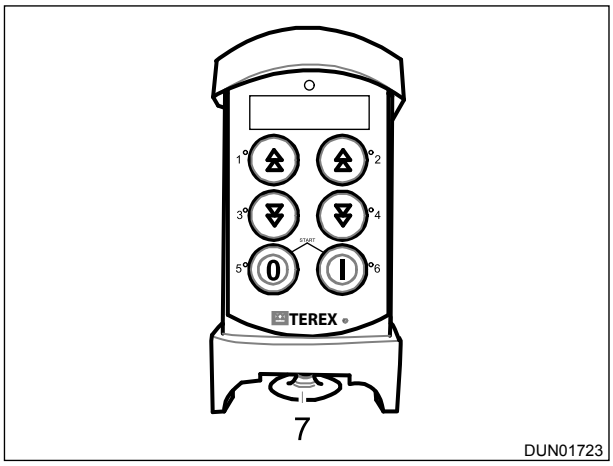

Figure 4.28 - Radio Remote Tracking Layout.

The table below gives a description of each button on the Radio Remote Tracking transmitter shown above.

Table 4.4 - Radio Remote Tracking

ID	Description
1	Left Track Forward
2	Right Track Forward
3	Left Track Reverse
4	Right Track Reverse
5	Stop Tracks
6	Start Tracks
7	Machine Stop

(5) MCU 200 Controller - Tier 3

(a) Overview

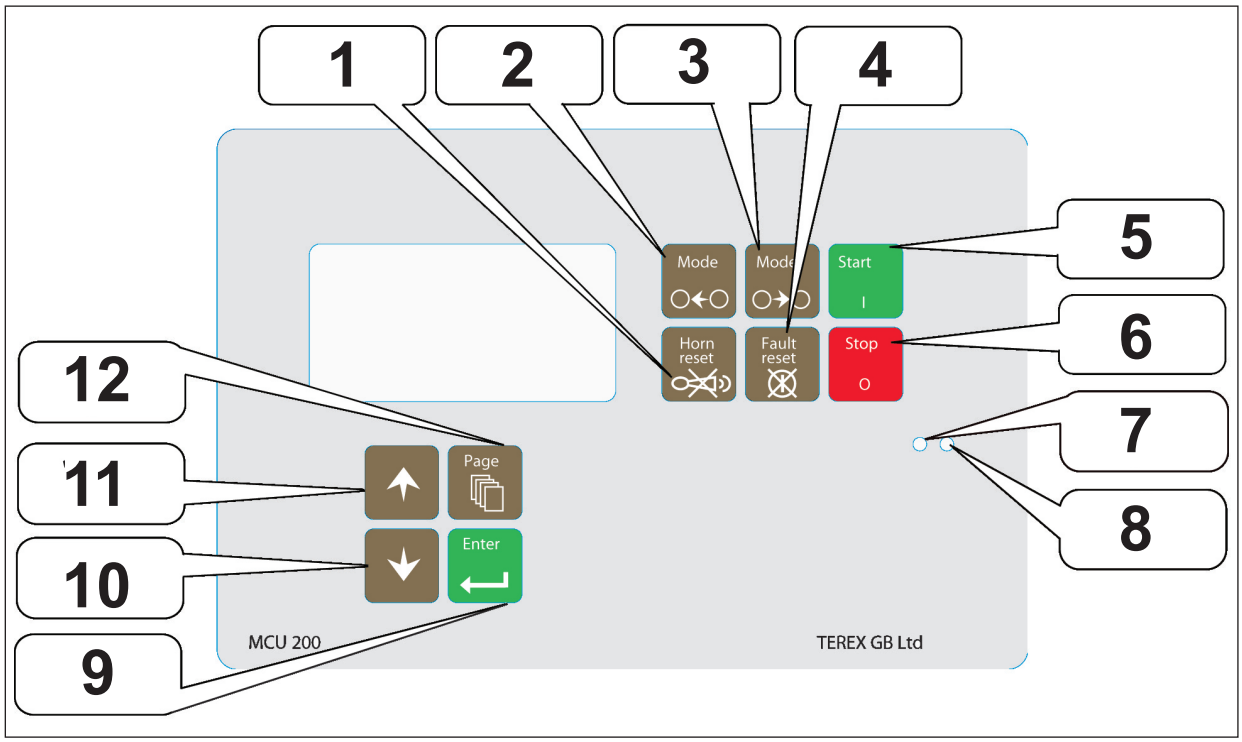

Figure 4.29 - MCU 200 Operator Interface

Table 4.5 - MCU 200 Function Key and Display LED Description

Number	Description
1	Unused
2	Mode Select - Backward Cyclic Selection of OFF-MAN-AUT
3	Mode Select - Forward Cyclic Selection of OFF-MAN-AUT
4	Fault Reset – Acknowledges Faults and Alarms
5	Start – Begins Start Sequence
6	Stop – Stops Engine
7	Green LED – Engine Running
8	Red LED – Fault Present
9	Enter – Confirm Setpoint value
10	Down select Button – Setpoint adjust / Screen Select etc
11	Up select Button – Setpoint adjust / Screen Select etc
12	Page – Cyclic Selection of Display Mode

(b) Measurement Screens

Main Measurement Screen / Home Screen

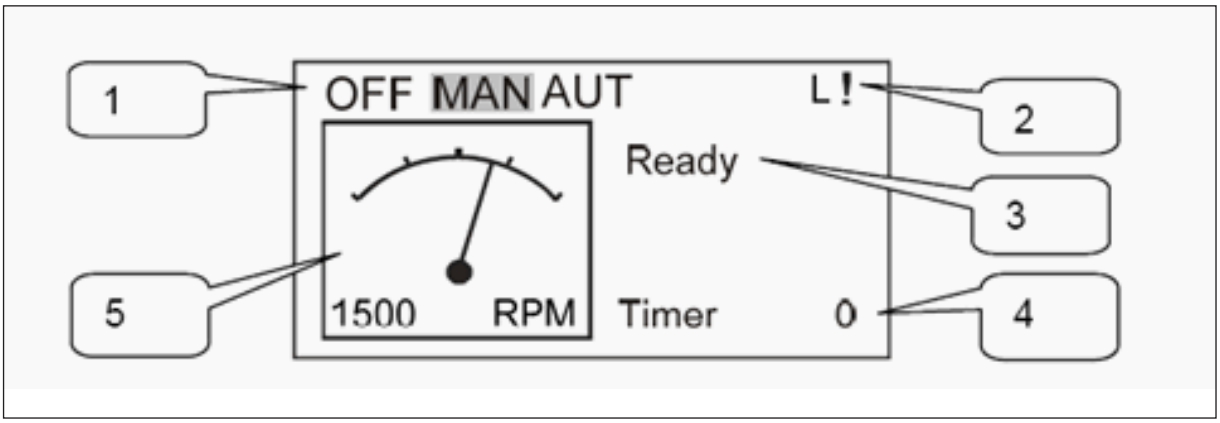

1 Operation Mode of Engine

2 Indication: L=Access Lock,! = Active Alarm

3 Status of Control System

4 Timer – events counting time (Prestart, Crank Pause etc)

5 Engine RPM

Analogue Inputs Screen

This screen shows the status of the analogue inputs, where used

- Oil Pressure Bar graph with Protection (Shutdown) Limits shown
- Water Temperature Bar graph with Protection (Shutdown) Limits shown
- Fuel Level Bar graph with Protection (Shutdown) Limits shown
- Battery Voltage Bar graph with Protection (Shutdown) Limits shown

NOTE: Depending on application, some or all of the above may be unavailable

Binary Inputs Screen

This screen shows the status of the Binary Inputs as a ‘1’ for ON or a ‘0’ for OFF

- Emergency Stop
- Pressure Setpoint 1
- Pressure Setpoint 2
- Start Feeder
- Tracks Request
- Remote Start (Ignition Crank)

Binary Outputs Screen

This screen shows the status of the Binary Outputs as a '1' for ON or a '0' for OFF

- Starter Solenoid
- Fuel Solenoid / ECU On
- Cooling Fans
- Siren / Beacon
- Tracks
- ECU Ready

NOTE: All binary inputs and outputs are Negative Switching. Therefore a 0VDC input is interpreted as ON and the outputs switch 0VDC out.

ECU State Screen

This screen gives the status of the ECU when used with electronic engines

- ECU Yellow Lamp
- ECU Red Lamp
- ECU Wait to Start

Statistics Screen

This screen gives an overview of the key statistics as follows:

- Run Hours — Total Engine Run Hours
- Number of Starts — Total Start Attempts
- E Stop — Total Emergency Stop Events
- Shutdown — Total Engine Shutdown Stops (excluding E-Stops)
- Next Service Time — Hours remaining until Next Service is due

ECU Alarm List

Diagnostic messages are read from the ECU and displayed in this second alarm list The J1939 standards of SPN (Suspect Parameter Number), OC (Occurrence Count) and FMI (Failure Mode Identifier) are shown together with a text description if available.

The following image shows typical ECU alarms being displayed on this second alarm list. As you scroll down through the list, the additional information for that alarm (SPN, OC and FMI) are displayed at the bottom of the page. If no test description is available, the SPN will be given in decimal and Hex.

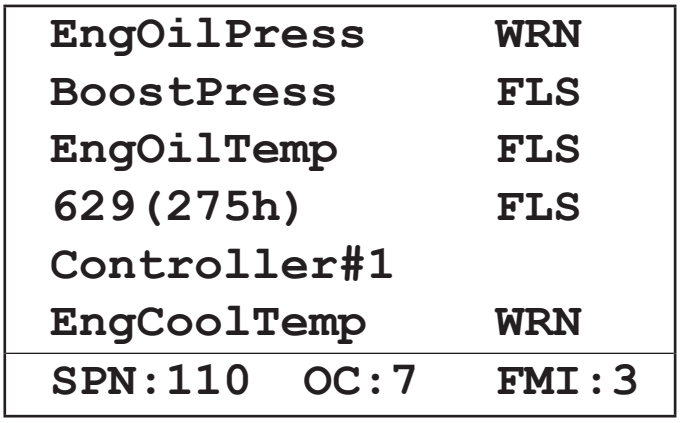

Figure 4.30 - ECU Alarm List Screen

Standard Alarm List

This screen displays active or inactive alarms. This screen will be displayed automatically when any new alarm appears, but only from the Main Measurement (Home) screen

(c) Alarm Management

There are two types of Alarm displayed:

- Warning
- Shutdown

Warning (WRN)

When a Warning Alarm is activated, the engine will not shutdown but the Alarm LED will be Red and the fault will be displayed on the screen. This type of alarm is non-critical.

Shutdown (SD)

When a Shutdown alarm is activated, the Fuel Solenoid, Starter and Pre-start outputs are opened immediately causing the engine to shut down.

List of Possible Fault Codes

FC001-E STOP	E - Stop
FC002-HOL LOW	Hydraulic Oil Level Low
FC003-CL LOW	Coolant Level Low
FC004-ET HIGH	High Engine Temperature
FC005-AFR	Air Filter Restriction
FC006-FUEL CNT	Fuel Contamination
FC007-OP LOW	Engine Oil Pressure low

List of Possible Alarms

Event Specification	Alarm Type	Description
Overspeed	SD	Engine RPM is greater than ***Overspeed*** setpoint
Underspeed	SD	Engine RPM is lower than ***Underspeed*** setpoint
EmergencyStop	SD	Emergency Stop Input is Open
LowCoolantLvl	SD	Low Coolant Level input is closed for 3 seconds or more
LowHydOilLvl	SD	Low Hydraulic Oil Input is closed for 3 seconds or more
AirFilterRest	SD	Air filter Restriction Input is closed for 30 minutes or more
FuelContam	SD	Fuel Contamination Input is closed for 3 seconds or more
Sd OilPressure	SD	Oil Pressure Input is closed for 3 seconds or more when engine is running
Sd EngineTemp engine is running	SD	Engine Temperature Input is closed for 3 seconds or more when engine is running
PickupFault	SD	No RPM Reading from Magnetic Pickup or Alternator W+ terminal
StopFail	SD	Engine Failed to Stop
WrnServiceTime	WRN	Engine Run Hours reach the value in the ***NextServTime*** setpoint
ChrgAlternFail	WRN	Failure of Alternator to charge the battery
Wrn ECU Alarm	WRN	ECU Alarm List has an active fault
Low BackupBatt	WRN	Real time Clock internal battery is low
Ubatt	WRN	Battery Voltage is outside limits set in ***Batt Overvolt*** and ***Batt Undervolt*** setpoints
Start Failed	SD	Engine Failed to start
Battery Flat	WRN	Controller shutdown due to low battery voltage

MCU 200 States

State	Description
Init	Auto Test During Power-Up
Not Ready	Engine Not Ready to start
Prestart	Prestart sequence in process
Cranking	Engine is Cranking
Pause	Pause between start attempts
Starting	Starting Speed is reached
Running	Engine is running at nominal speed
Stop	Engine is stopped
Shutdown	Shut Down alarm is activated
Ready	Engine is ready to run
Cooling	Engine is cooling before stop

(6) Duel Power (Tier 3)

(a) Control Panel Component Identification

Figure 4.31 below shows the Dual Power control panel as used on mobile machines. Controls panels may vary.

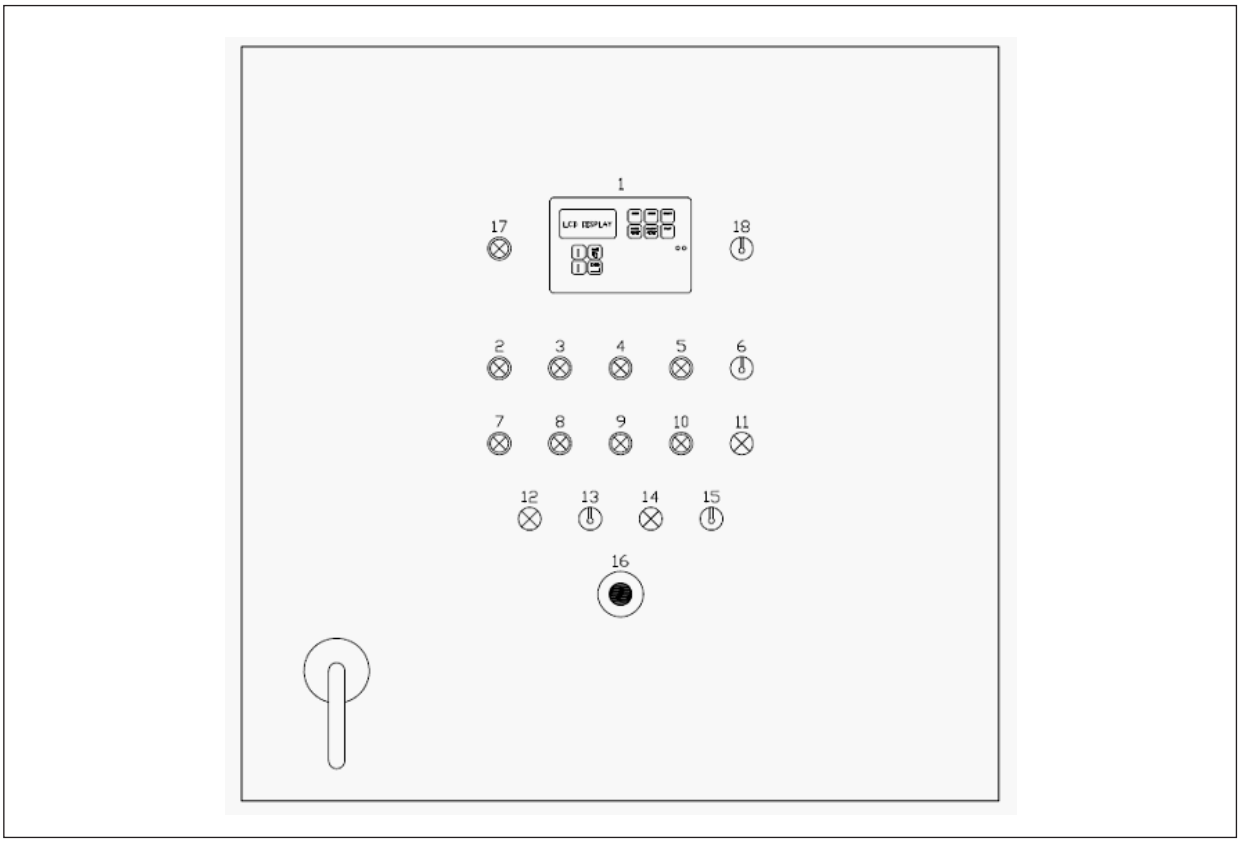

Figure 4.31 - Dual Power Control Panel

The table gives the description of the various switches and lamps on the dual power control panel door.

Table 4.6 - Control Panel Door Component Identification

ID	Description	Function
1	MCU200 Controller	Diesel Mode Control
2	Prestart Button / Lamp	Electric Mode Prestart
3	Oil Cooler Start button / Run Lamp	Electric Mode Oil Cooler start
4	Motor 1 Start button / Run Lamp	Electric Mode Motor 1 start
5	Motor 2 Start button / Run Lamp	Electric Mode Motor 2 start
6	Diesel / Electrical Mode Select Switch	Select between Electric / Diesel Mode
7	EStop Reset button / Lamp	Electric Mode EStop Reset
8	Oil Cooler Stop button / Trip Lamp	Electric Mode Oil Cooler stop
9	Motor 1 Stop button / Trip Lamp	Electric Mode Motor 1 stop
10	Motor 2 Stop button / Trip Lamp	Electric Mode Motor 2 stop
11	Electric Mode On Lamp	Indication of Electric Operating Mode
12	Test Mode Lamp	Indication of Test Mode
13	Test / Off / Manual Selector Switch	Select between Test / Manual Mode
14	Manual Mode Lamp	Indication of Manual Mode
15	Ignition Switch	Switch on Power in Diesel Mode
16	Emergency Stop Button	EStop machine in Diesel / Electric Mode
17	Diagnostic / Maintenance Button / Lamp	Achieve Flash codes
18	Speed Selection Switch	Select engine speed in Diesel Mode

(b) Control Panel Internal Component Identification

The image below shows the internal component layout in the main control panel on Dual Power Machines.

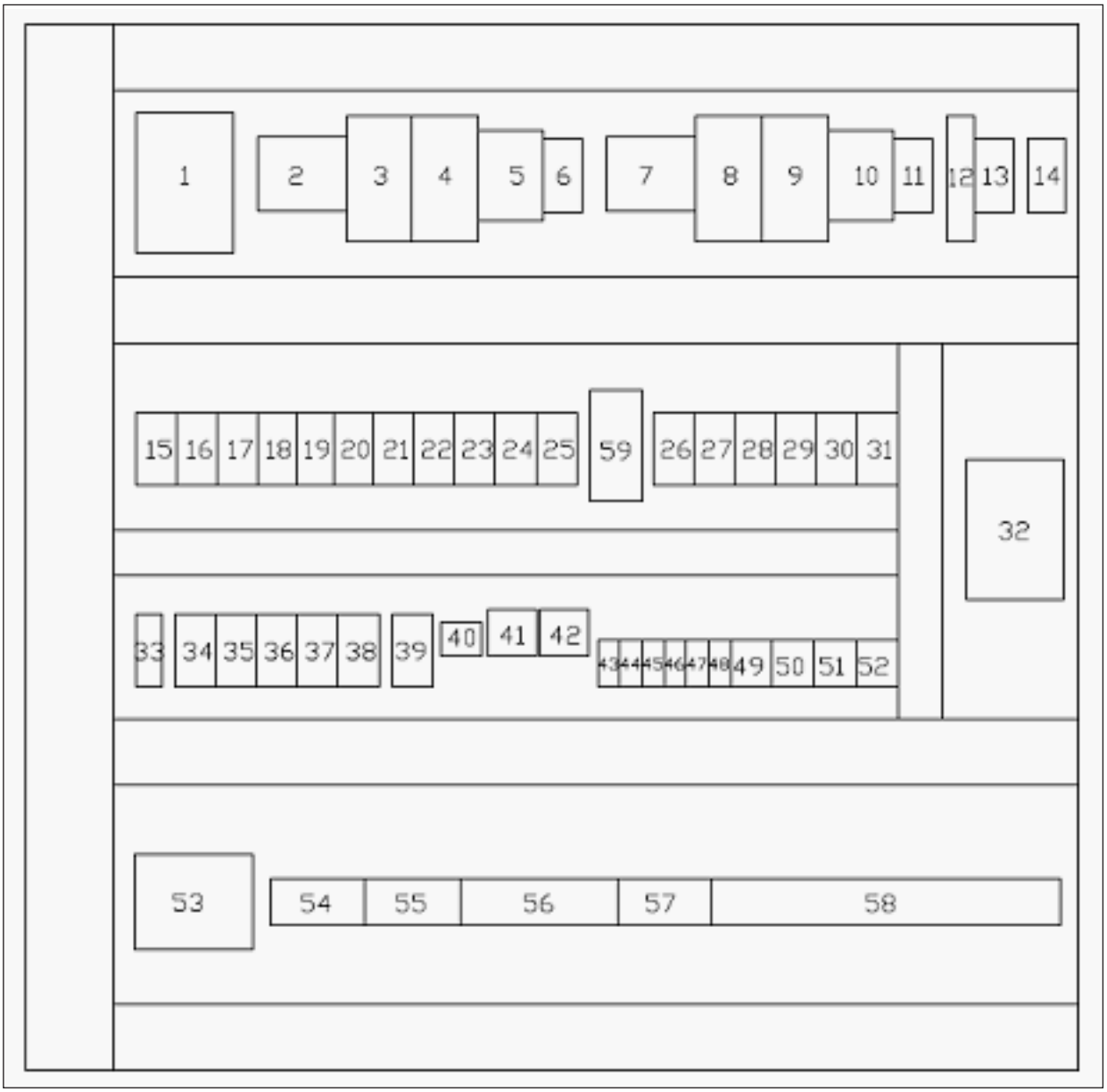

Figure 4.32 - Main Control Panel Internal Component Layout

The table below gives the description of the internal components used in the Dual Power main control panel.

Table 4.7 - Main Panel Internal Component Identification

ID	Tag	Description
1	PS1	110VAC – 12VDC 25A Power Supply
2	CB1	Motor 1 MCB
3	KM1	Motor 1 Main Contactor
4	KM1.1	Motor 1 Delta Contactor
5	KM1.2	Motor 1 Star Contactor
6	T3	Motor 1 Star / Delta Timer
7	CB2	Motor 2 MCB
8	KM2	Motor 2 Main Contactor
9	KM2.1	Motor 2 Delta Contactor
10	KM2.2	Motor 2 Star Contactor
11	T4	Motor 2 Star / Delta Timer
12	ESR	Emergency Stop Safety Relay
13	K1	Emergency Stop Auxiliary Relay
14	X10	Auxiliary Machine Interlock Terminals
15	CB3	415 – 110 Transformer DP Circuit Breaker
16	CB4	110VAC Control Circuit Breaker
17	CB5	110VAC – 12VDC Power Supply Circuit Breaker
18	T1	Pre-start Timer 1
19	T2	Pre-start Timer 2
20	T5	Fan Interlock Delay Timer
21	R4	Pre-start Relay 1
22	R5	Pre-start Relay 2
23	R6	Pre-start Relay 3
24	K2	Remote Interlock Relay
25	HRC	Hours Run Clock (Electric Mode)
26	R1	Test Mode Relay 1
27	R2	Test Mode Relay 2
28	R3	Manual Mode Relay
29	R7	Motor 1 Trip Relay
30	R8	Motor 2 Trip Relay
31	R9	Electric Mode On Relay
32	TX1	415VAC – 110VAC 630VA Transformer
33	CB6	12VDC Power Supply Control Circuit Breaker
34	R11	Remote Tipping Grid Supply Interlock Relay
35	R12	Tracks Enabled Relay
36	IR1	EStop Healthy Signal Interface Relay
37	IR2	Keyswitch Start Signal Interface Relay
38	IR3	Radio Tracks On Relay

ID	Tag	Description
39	X1/X2	12VDC Power Rail Terminals (Electric Mode)
40	AR6	Engine Crank Automotive Relay 70A
41	AR11	Engine Preheat Automotive Relay 100A
42	AR1B	Battery Power On Automotive Relay 100A
43	AR12	Fan 2 Delay Automotive Relay (Electric Mode) 30A
44	AR1A	Mains On Interlock Automotive Relay 15A
45	AR7	ECU Ignition Relay / Fuel Solenoid Relay 15A
46	AR8	Siren / Beacon Automotive Relay 15A
47	AR9	Fan 1 Ground Interlock Automotive Relay 30A
48	AR10	Fan 2 Ground Interlock Automotive Relay 30A
49	AR2	Fan 1 Supply Interlock Automotive Relay 30A
50	AR3	Fan 2 Supply Interlock Automotive Relay 30A
51	AR4	Fan 1 On Automotive Relay 30A
52	AR5	Fan 2 On Automotive Relay 30A
53	ISO1	Main Isolator 160A 3P
54	1UVW	Main Motor 1 Connection Terminals
55	2UVW	Main Motor 2 Connection Terminals
56	TERM	Terminals
57	X6	Automotive Fuses

(7) Tier 3 (Including Constant Speed)

(a) Control Panel

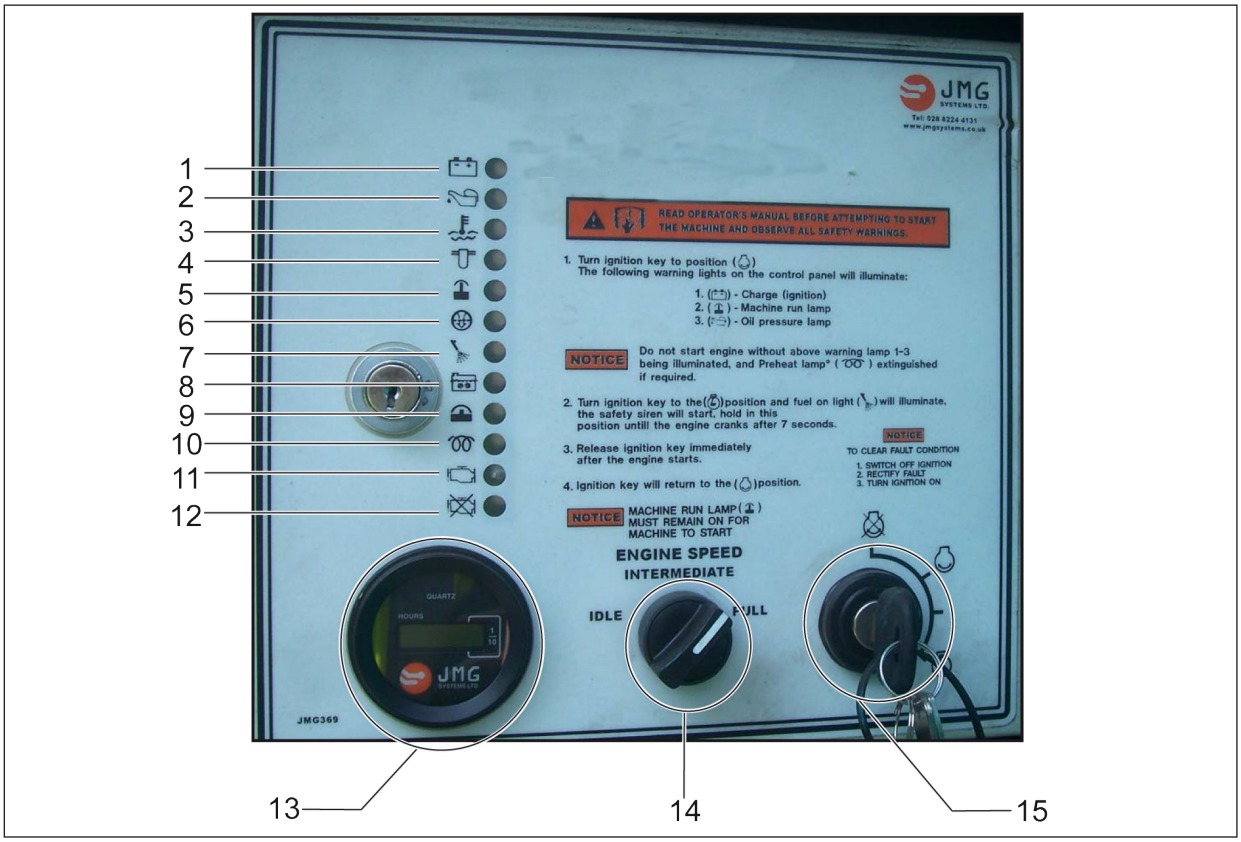

Figure 4.33 - Main Electronic Panel

ID	Symbol	Name	Description
1	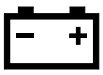	Battery Charging warning light	This light should illuminate when the key switch is turned to the ON position. As soon as the engine starts it should go out. If it fails to illuminate when the key is turned on, or if it illuminates when the engine is running, it indicates that there is a fault in the charging circuit. Stop the engine and have the circuit checked.
2		Oil Pressure Warning Light	This light should illuminate when the key switch is turned to the ON position. As soon as the engine starts it should go out. If a fault occurs in the oil pressure system the engine will shutdown after 2 seconds.
3		Coolant Temperature Warning Light	This light will only illuminate if a problem occurs in the coolant system, such as low water level. The engine will shut down 5 seconds after the fault has been detected.
4		Fuel contamination light	This light illuminates if a problem occurs in the fuel system, such as water contamination. The engine will shut down 1 second after the fault has been detected.

ID	Symbol	Name	Description
5		Engine Run Light	This light will only illuminate when the key is turned to the ON position and will remain on at all times. If it goes out then an E-Stop has been pressed and the engine will shut down immediately.
6		Air Breather Restriction Warning Light	This light should illuminate if a problem occurs in the air breather system. After 30 minutes the engine will shut down but the light will remain on until the fault has been repaired.
7		Fuel On Light	This light should illuminate when the engine starts and will remain on at all times. It will go out when the engine has been shut down.
8		Hydraulic Oil Level Warning Light (not shown)	This light will only illuminate if the hydraulic oil level is low. The engine will shut down 5 seconds after the fault has been detected.
9		E-Stop Activated Light	This light will only illuminate when an E-Stop has been pressed. This will immediately shut down the engine. If the light is flashing after shut down, this indicates that the manual tracking umbilical E-Stop has been pressed. If the light remains on constantly then another E-Stop has been pressed.
10		Engine Pre-Heater Indicator Light	This light only illuminates when the pre-heat button is operated during start up.
11		CAT Warning Light	This light will only illuminate when the Caterpillar engine or Caterpillar component has developed a problem. This can result in an engine shut down. In the event of a fault causing this light to illuminate you should contact your local Caterpillar dealer for further information.
12		CAT ECU Warning Light	This light will only illuminate when the Caterpillar engine control unit detects a problem. This can result in an engine shut down. In the event of a fault causing this light to illuminate you should contact your local Caterpillar dealer for further information.
13		Hour Clock	This will record the number of hours that the engine has been running.
14		Throttle Control/ Two-speed tracking	This is used to control the engine throttle by selecting one of the 3 speeds.. On constant speed machines there is no throttle switch, instead it is a two-speed tracking switch.
15		Key Start Switch	This is used to start the engine when required.

(b) Manual Throttle

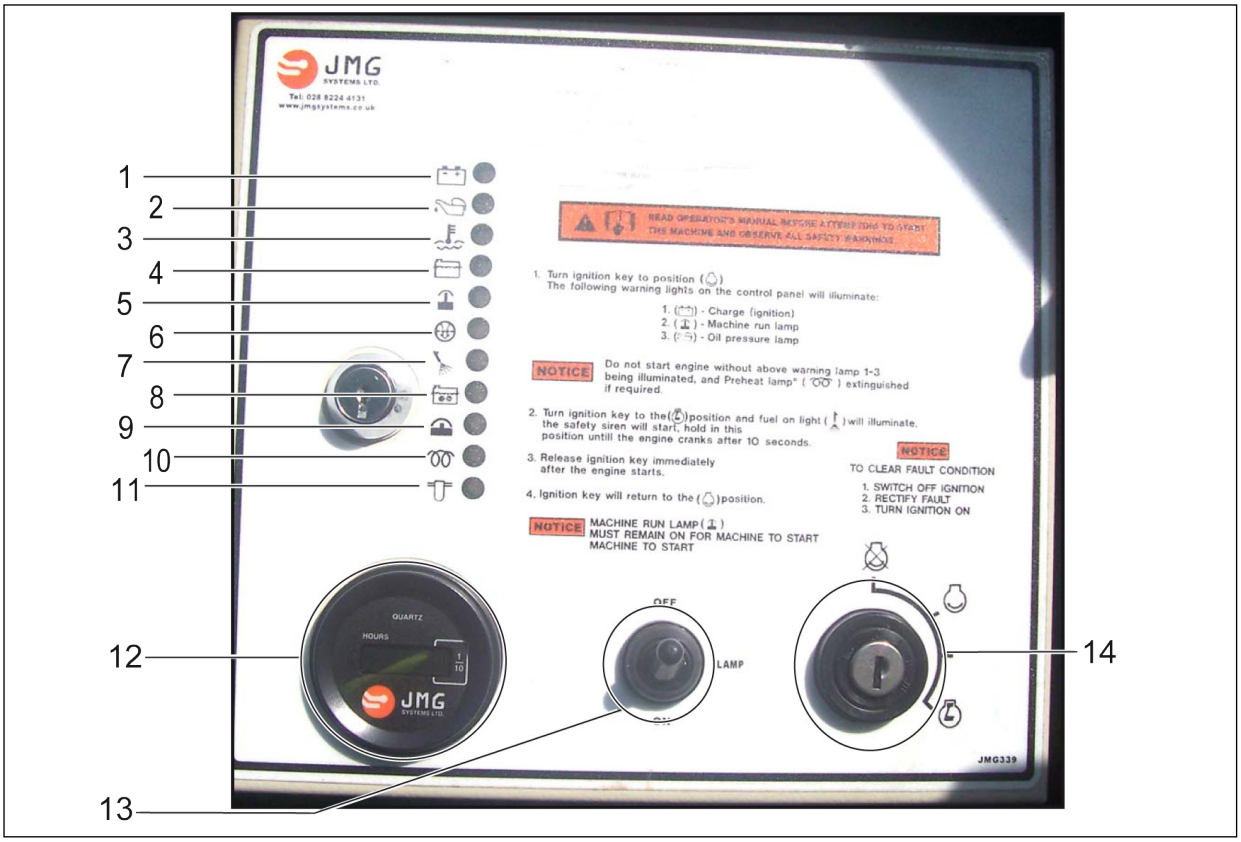

Figure 4.34 - Manual Throttle

ID	Symbol	Name	Description
1	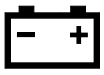	Battery Charging Warning Light	This light should illuminate when the key switch is turned to the ON position. As soon as the engine starts it should go out. If it fails to illuminate when the key is turned on, or if it illuminates when the engine is running, it indicates that there is a fault in the charging circuit. Stop the engine and have the circuit checked.
2		Oil Pressure Warning Light	This light should illuminate when the key switch is turned to the ON position. As soon as the engine starts it should go out. If a fault occurs in the oil pressure system the engine will shutdown after 2 seconds
3		Coolant Temperature Warning Light	This light will only illuminate if a problem occurs in the coolant system, such as low water level. The engine will shut down 5 seconds after the fault has been detected.
4		Coolant Level Warning Light	This light will only illuminate if a problem occurs in the coolant system, such as low water level. The engine will shut down 5 seconds after the fault has been detected.

ID	Symbol	Name	Description
5		Engine Run Light	This light will only illuminate when the key is turned to the ON position and will remain on at all times. If it goes out then an E-Stop has been pressed and the engine will shut down immediately.
6		Air Breather Restriction Warning Light	This light should illuminate if a problem occurs in the air breather system. After 30 minutes the engine will shut down but the light will remain on until the fault has been repaired.
7		Fuel On Light	This light should illuminate when the engine starts and will remain on at all times. It will go out when the engine has been shut down.
8		Hydraulic Oil Level Warning Light (Not Shown)	This light will only illuminate if the hydraulic oil level is low. The engine will shut down 5 seconds after the fault has been detected.
9		E-Stop Activated Light	This light will only illuminate when an E-Stop has been pressed. This will immediately shut down the engine. If the light is flashing after shut down, this indicates that the manual tracking umbilical E-Stop has been pressed. If the light remains on constantly than another E-Stop has been pressed.
10		Engine Pre-Heater Indicator Light	This light only illuminates when the pre-heat button is operated during start up.
11		Fuel Contamination Light	This light illuminates if a problem occurs in the fuel system, such as water contamination. The engine will shut down 1 second after the fault has been detected.
12		Hour Clock	This will record the number of hours that the engine has been running.
13		Optional Work Light Switch	This optional light can be switched on to give more light when working at the power unit.
14		Key Start Switch	This is used to start the engine when required.

(c) Engine Pre-Heat - Standard Diesel Unit Only

If an engine pre-heat sequence was installed to the control panel during manufacture, it will be either automatic or manual.

If it is automatic then the pre-heat light will illuminate when the key is turned to the start position (Item 3). The engine will crank automatically once the pre-heat operation has been completed and the light will go out.

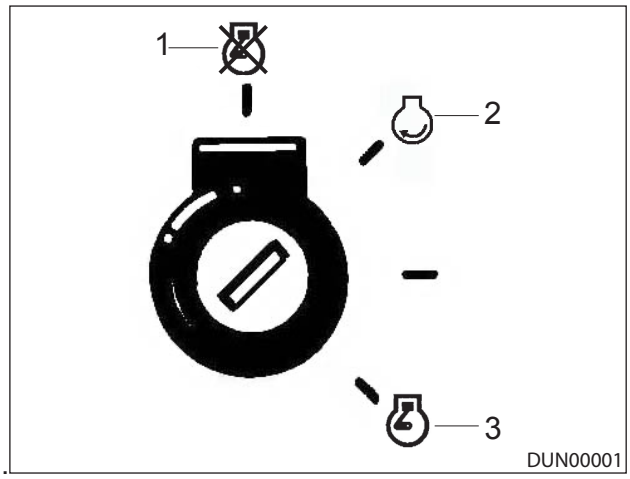

Figure 4.35 - Ignition Key Positions

If manual pre-heat has been fitted then the light will illuminate when the key is turned to the pre-heat position. The engine can be manually preheated by holding in the preheat button (Item 1) on the side of the control panel. The light will extinguish after the preheat operation has been completed and the key can be turned to the start position to crank the engine.

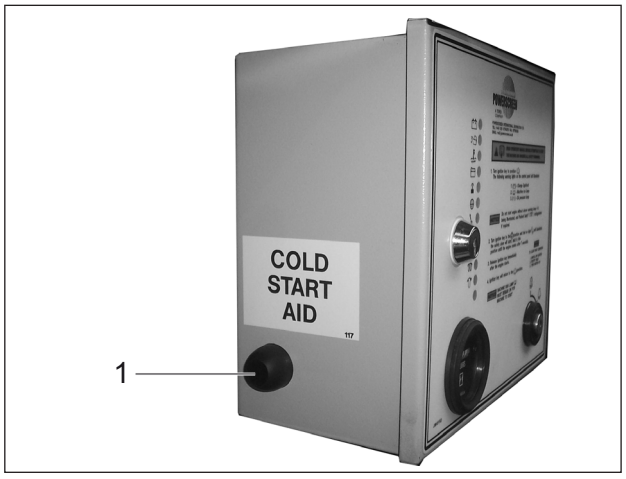

Figure 4.36 - Engine Pre Heat Button

(8) Tipping/Vibrating Grid Control Options

The tipping/vibrating grid can be operated either manually using controls on the receiver box or via a remote control.

(i) Tipping/Vibrating Grid Control (Option 1)

To operate the grid without using the Transmitter, the two-position toggle switch (Item 1) on the side of the receiver can be used. The grid can also be operated with the grid remote control by either using a pre-stored program sequence or the up/down sequence override buttons. Refer to Chapter 7 for more information.

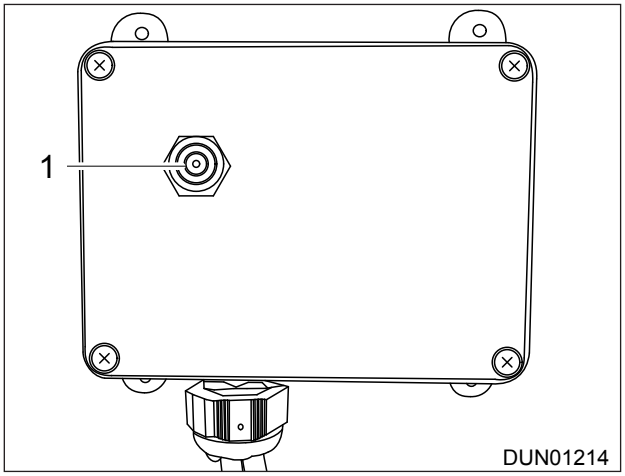

Figure 4.37 - Radio Tipping/Vibrating Grid Receiver

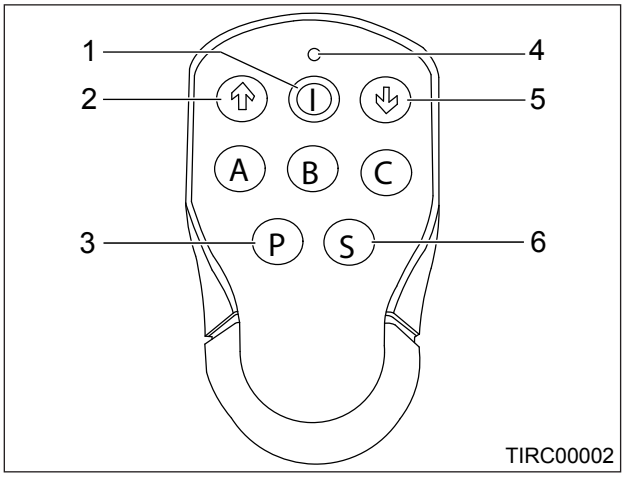

Figure 4.38 - RTG Transmitter

(ii) Tipping/Vibrating Grid Control (Option 2)

In order to operate the grid using the remote control, a cycle must be programmed using the receiver box controls. The remote control actuates this cycle and cannot alter the cycle. The grid remote control receiver box is situated on the power unit exterior. Refer to Chapter 7 for more information.

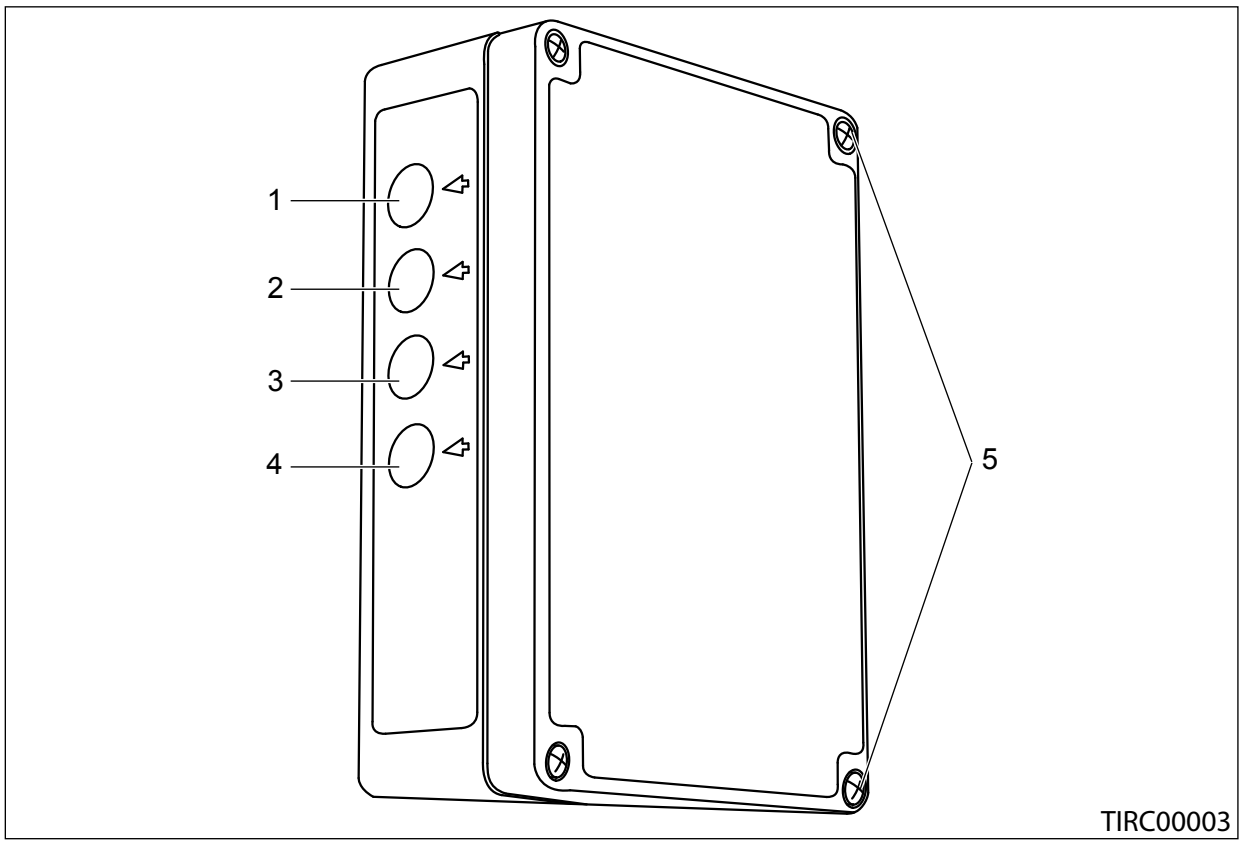

Figure 4.39 - Tipping/Vibrating Grid Control

1 Press 3 times & hold to set grid raise time

2 Press 3 times & hold to set grid lower time

3 Grid manual raise

4 Grid manual lower

5 Mounting screws

4.5 Telematics

If a telematics system is included with the Equipment, the telematics system is administered by a third party and collects a range of operational data about the Equipment including, but not limited to, usage, performance and reliability. Buyer consents to Seller's obtaining such data for warranty, product improvement and customer support purposes. Buyer understands that the Equipment warranty is conditioned on the proper operation of the telematics system and Buyer shall not disable, tamper or interfere with the telematics system.

To access telematics system information contact your local dealer.

4.6 Pictorial Decal Descriptions

Pictorial decals have been placed on the machine to ensure that the machine is correctly operated and maintained. Operations decals describe the operations of levers on the machine. Information decals give details about how to correctly operate and maintain the machine.

(1) Machine Operations Decals

Each operation decal is placed on the machine beside the corresponding lever or control. The following tables give short explanations of each operation decal used on the machine. The old decals in the tables are still used on machines but are being replaced by the new pictorial decals in the tables. The operations of the levers or controls will remain the same. The up arrow in the decals indicates moving the lever forward or up. The circle in the decals indicates the neutral position. The down arrow in the decals indicates moving the lever back or down. The new pictorial decals contain an image of a component or of the machine with a shaded component. This indicates the part of the machine and the operation that the lever controls.

Drive Control Bank 2-Deck

New Decal	Explanation	
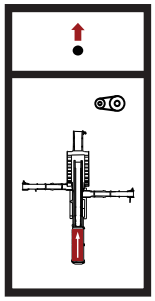	⬆	Drive feeder
	●	Hold
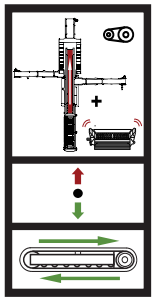	⬆	Drive vibrating grid & main conveyor
	●	Hold
	⇩	Engage tracks
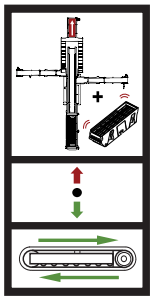	⬆	Drive screen box & tail conveyor
	●	Hold
	⇩	Engage tracks

New Decal	Explanation	
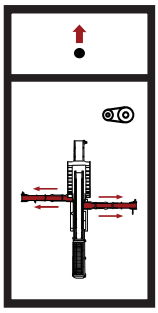	⬆	Drive side conveyors
	●	Hold
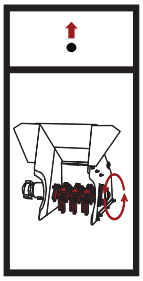	⬆	Drive shredder
	●	Hold

Drive Control Bank 3-Deck

New Decal	Explanation	
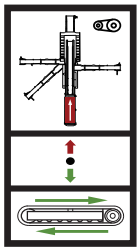	⬆	Drive Feeder
	●	Hold
	⇩	Engage Tracks
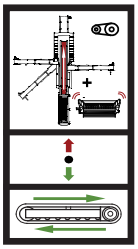	⬆	Drive vibrating grid & main conveyor
	●	Hold
	⇩	Engage Tracks
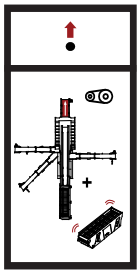	⬆	Drive screenbox & tail conveyor
	●	Hold
	⇩	Engage tracks

New Decal	Explanation	
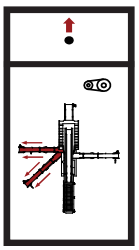	⬆	Drive side conveyor and auxiliary conveyor
	●	Hold
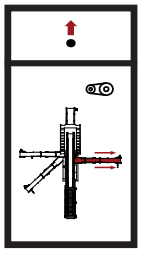	⬆	Drive side conveyors
	●	Hold
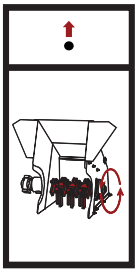	⬆	Drive shredder
	●	Hold

Auxiliary Control Bank

New Decal	Explanation	
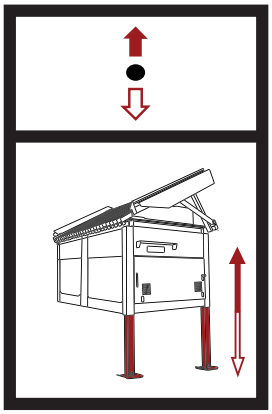	⇧	Raise jacking legs
	●	Hold
	⇩	Lower jacking legs
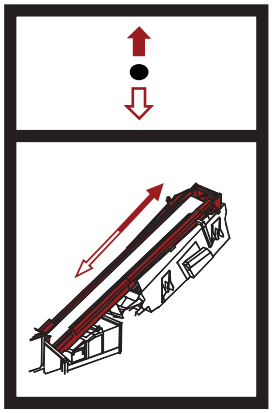	⇧	Raise main conveyor
	●	Hold
	⇩	Lower main conveyor
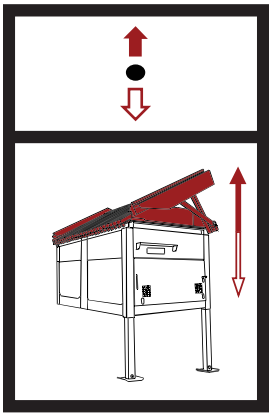	⇧	Raise vibrating grid
	●	Hold
	⇩	Lower vibrating grid
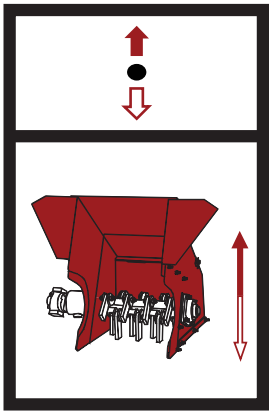	⇧	Raise shredder
	●	Hold
	⇩	Lower shredder

Direct Feed Option Drive Control Bank

New Decal	Explanation	
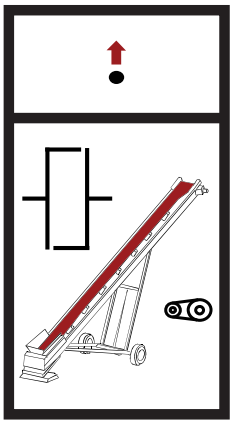	⬆	Drive auxiliary circuit
	●	Hold
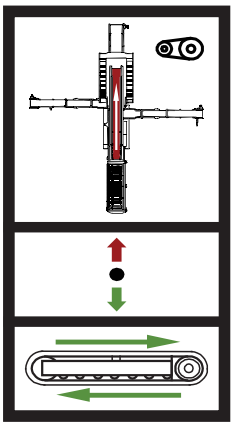	⬆	Drive main conveyor
	●	Hold
	⇩	Engage tracks
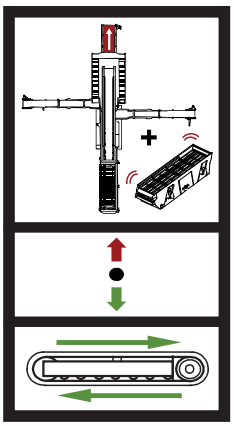	⬆	Drive screenbox & tail conveyor
	●	Hold
	⇩	Engage tracks
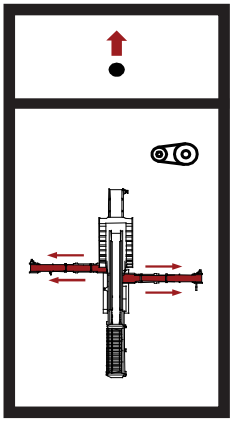	⬆	Drive side conveyors
	●	Hold

Direct Feed Option Auxiliary Bank

New Decal	Explanation	
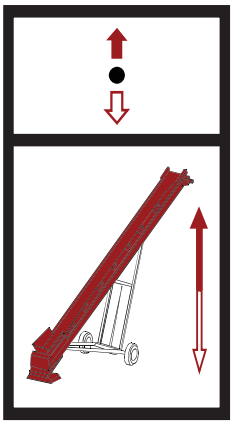	⬆	Auxiliary conveyor raise
	●	Hold
	⇩	Auxiliary conveyor lower
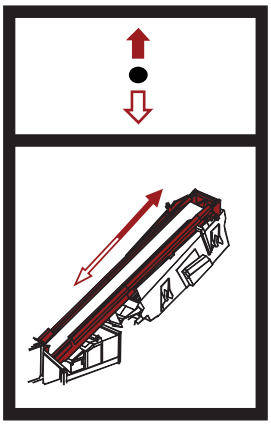	⬆	Raise main conveyor
	●	Hold
	⇩	Lower main conveyor

Flow Control Main Powerunit

New Decal	Explanation
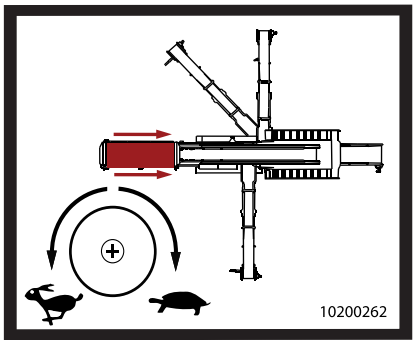	Turn flow control valve clockwise to decrease feeder conveyor speed. Turn flow control valve anti-clockwise to increase feeder conveyor speed.
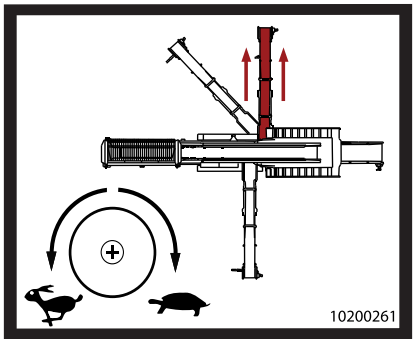	Turn flow control valve clockwise to decrease left hand side conveyor speed. Turn flow control valve anti-clockwise to increase left hand side conveyor speed.
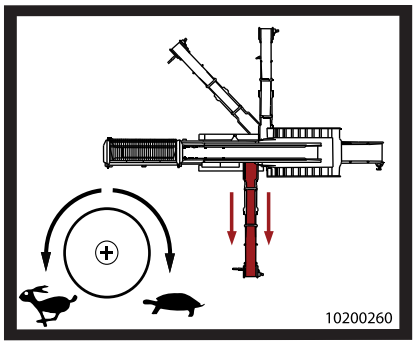	Turn flow control valve clockwise to decrease right hand side conveyor speed. Turn flow control valve anti-clockwise to increase right hand side conveyor speed.

Auxiliary Circuit Machine Flow Control Power Unit

New Decal	Explanation
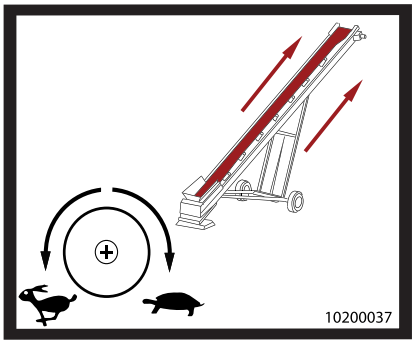	Turn flow control valve clockwise to decrease auxiliary conveyor speed. Turn flow control valve anti-clockwise to increase auxiliary conveyor speed.
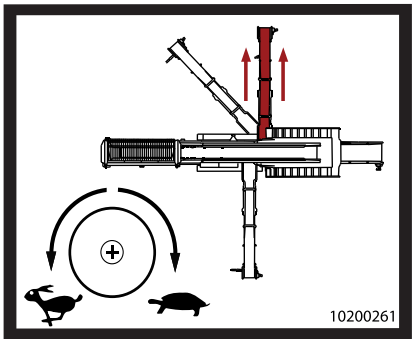	Turn flow control valve clockwise to decrease left hand side conveyor speed. Turn flow control valve anti-clockwise to increase left hand side conveyor speed
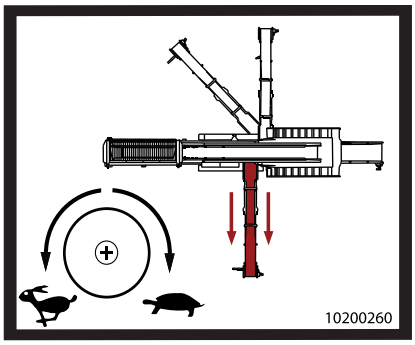	Turn flow control valve clockwise to decrease right hand side conveyor speed. Turn flow control valve anti-clockwise to increase right hand side conveyor speed.

RH/S Side Conveyor Open Close + Conveyor Control

New Decal	Explanation	
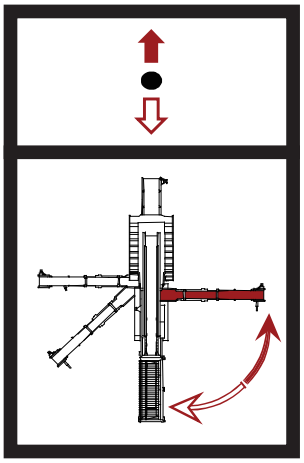	⬆	Open out RHS conveyor
	●	Hold
	⇩	Close in RHS conveyor
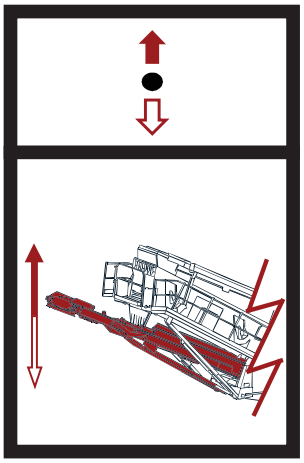	⬆	Raise tail conveyor
	●	Hold
	⇩	Lower tail conveyor
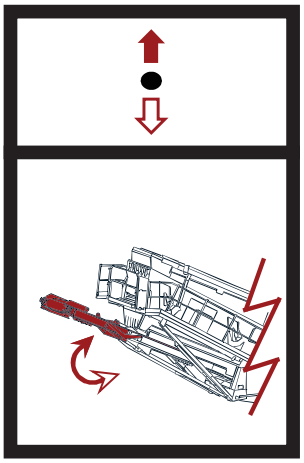	⬆	Raise tail conveyor end section
	●	Hold
	⇩	Lower tail conveyor end section

Rinser Option RHS Conveyor Open Close + Catchbox Raise

New Decal	Explanation	
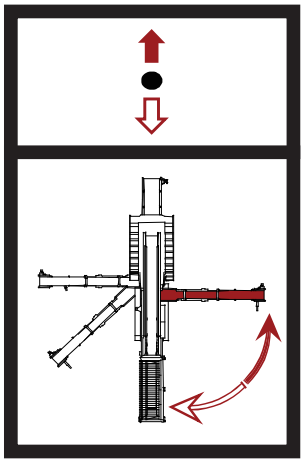	⇧	RH side conveyor open out
	●	Hold
	⇩	RH side conveyor close in
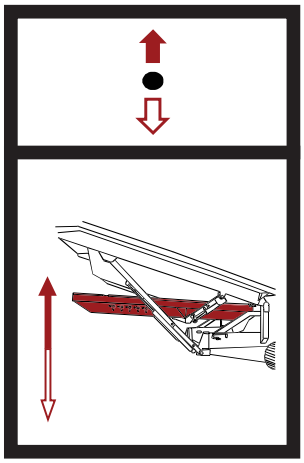	⇧	Tail conveyor/catchbox raise
	●	Hold
	⇩	Tail conveyor/catchbox lower

Screenbox Raise Lower + LHS Conveyor Open Close 2-Deck

New Decal	Explanation	
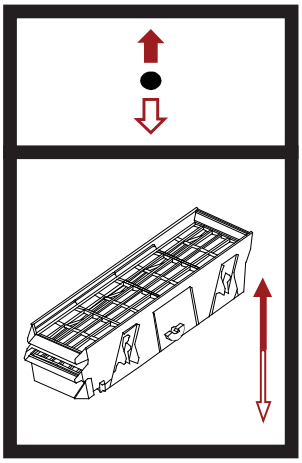	⬆	Raise screenbox
	●	Hold
	⇩	Lower screenbox
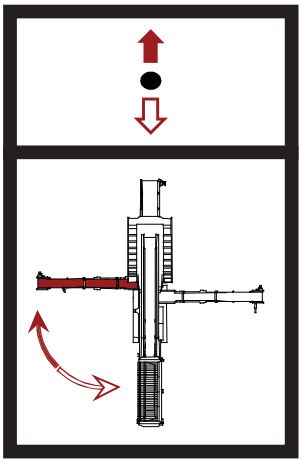	⬆	Open out LHS conveyor
	●	Hold
	⇩	Close in LHS conveyor

Screenbox Raise Lower + LHS Conveyor Open Close + Auxiliary Conveyor Control 3-Deck

New Decal	Explanation	
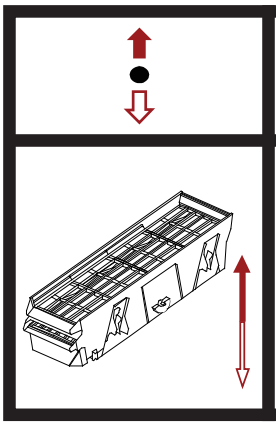	⬆	Raise screenbox
	●	Hold
	⇩	Lower screenbox
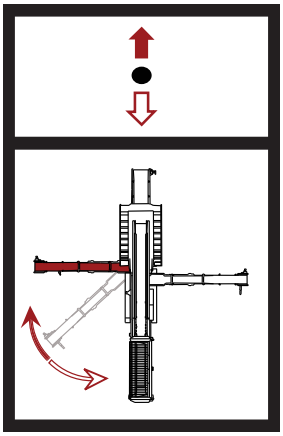	⬆	Open out LHS conveyor
	●	Hold
	⇩	Close in LHS conveyor
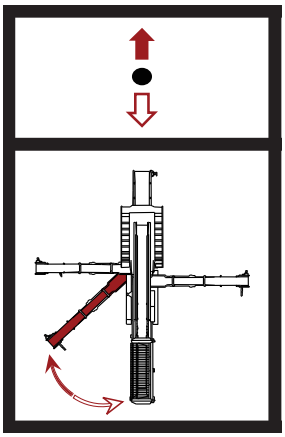	⬆	Auxiliary conveyor upper ram fold out
	●	Hold
	⇩	Auxiliary conveyor upper ram fold in
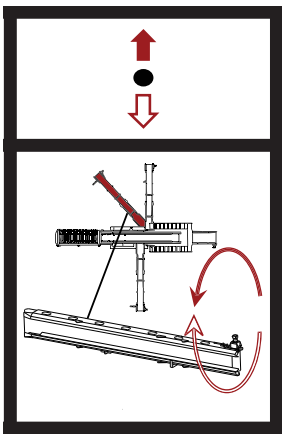	⬆	Auxiliary conveyor lower arm fold out
	●	Hold
	⇩	Auxiliary conveyor lower arm fold in

Wheel Machine Option Jacking Legs

Decal	Explanation	
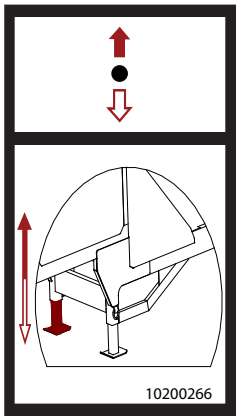	⬆	Raise Front jacking leg (LHS)
	●	Hold
	⇩	Lower Front jacking leg (LHS)
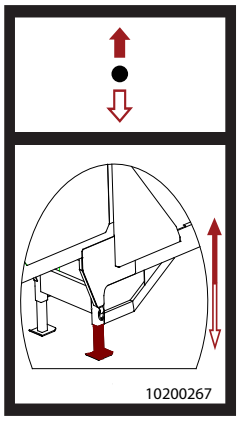	⬆	Raise Front jacking leg (RHS)
	●	Hold
	⇩	Lower Front jacking leg (RHS)
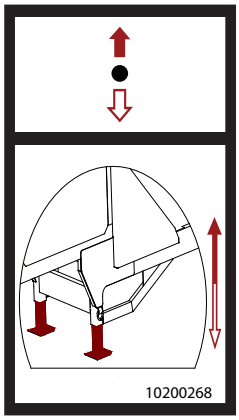	⬆	Raise Front jacking legs
	●	Hold
	⇩	Lower Front jacking legs
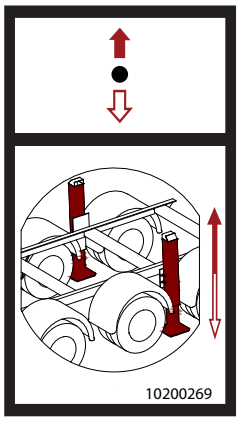	⬆	Raise Bogie jacking leg
	●	Hold
	⇩	Lower Bogie jacking legs

Roll in Bogie Option Jacking Legs

New Decal	Explanation	
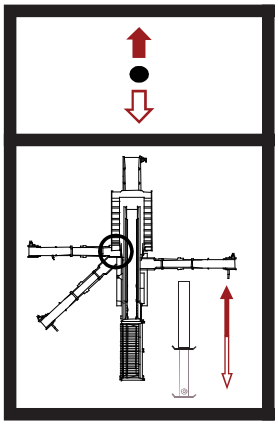	⬆	Front jacking legs (LHS) extend
	●	Hold
	⇩	Retract
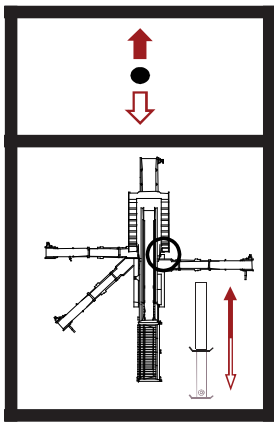	⬆	Front jacking legs (RHS) extend
	●	Hold
	⇩	Retract
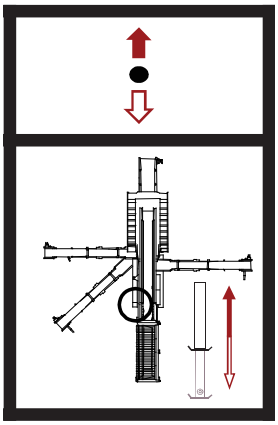	⬆	Back jacking legs (LHS) extend
	●	Hold
	⇩	Retract
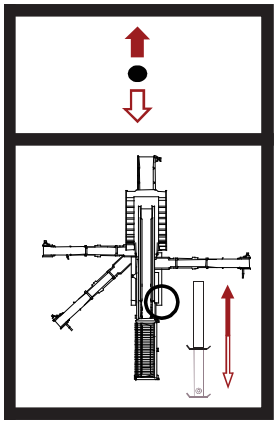	⬆	Back Jacking legs (RHS) extend
	●	Hold
	⇩	Retract

Extend And Retract Screen Tension Rams

New Decal	Explanation	
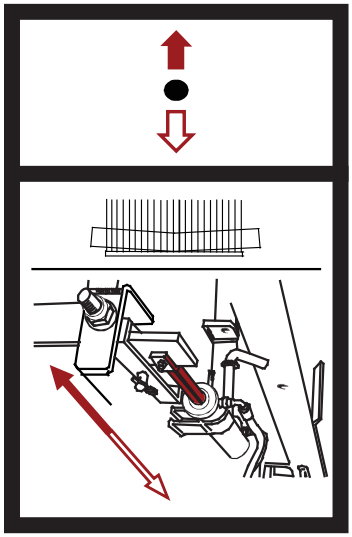	⬆	Extend screen tension rams
	●	Hold
	⇩	Retract screen tension rams

Magnetic Option

New Decal	Explanation	
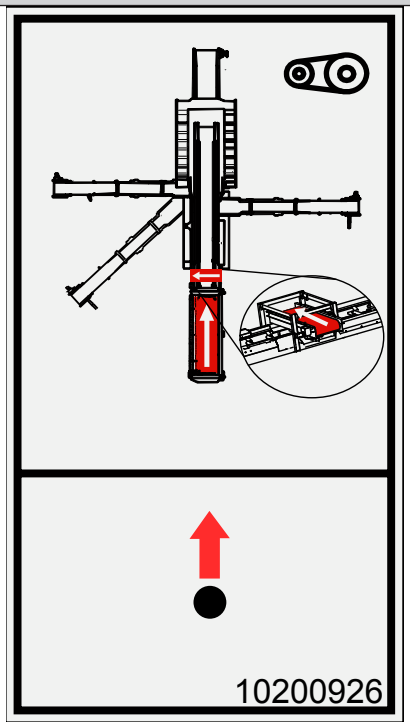	⬆	Drive feeder and magnetic option
	●	Hold

(2) Machine Information Decals

Decal	Explanation
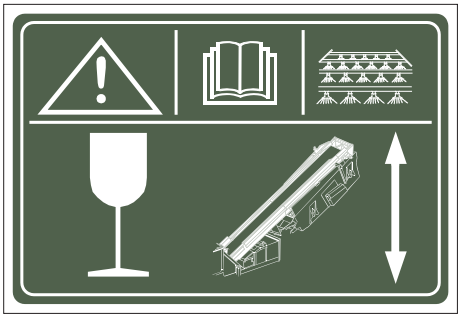	**Important** If top deck spray bars are fitted care must be taken whilst moving the screenbox and main conveyor. Rinser option only.
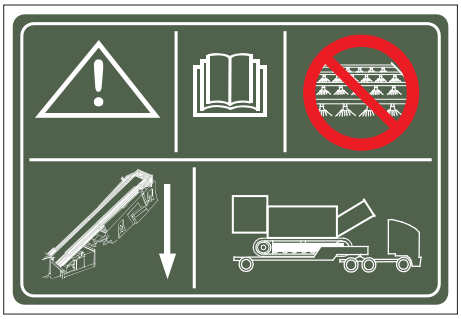	**Important** Remove top deck spray bars before lowering main conveyor and screenbox for transport. Rinser option only.
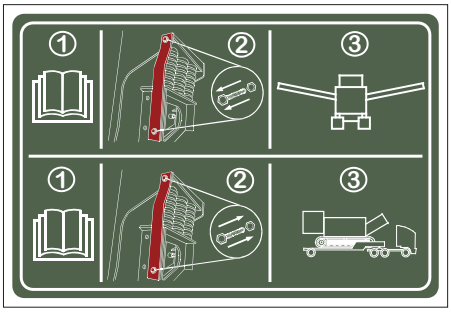	**Important** Separator anti-rock stays must be removed before operating machine
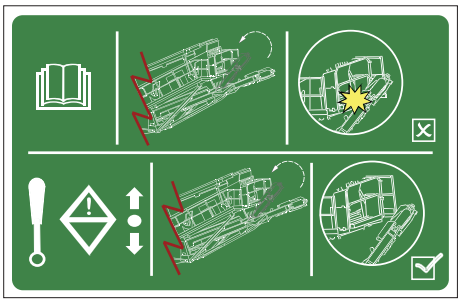	**Important** When raising tail conveyor be careful not to cause impact with maintenance platform.
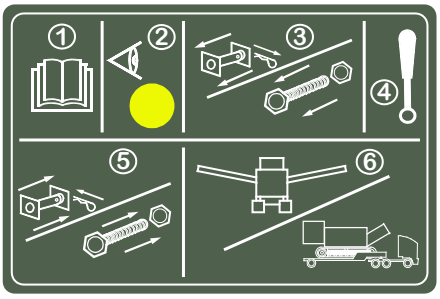	Items marked with a yellow circle must be removed/replaced before folding out/in for working position and transport position

Decal	Explanation
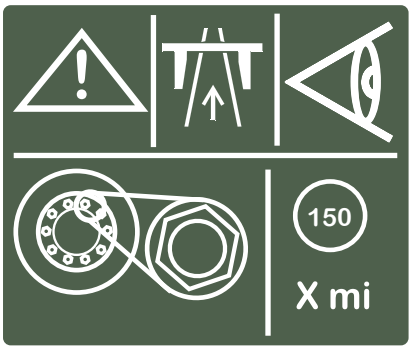	**Warning** On wheel machines when transporting wheel nuts should be checked every 150 miles.
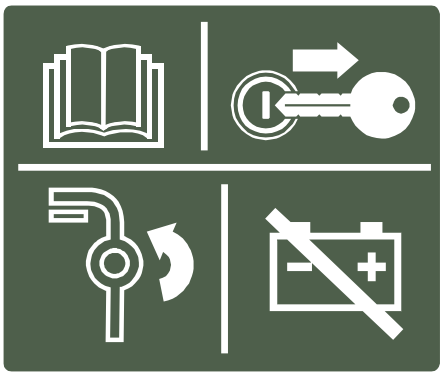	Battery isolator switch Isolate power and lock machine out before maintenance is carried out
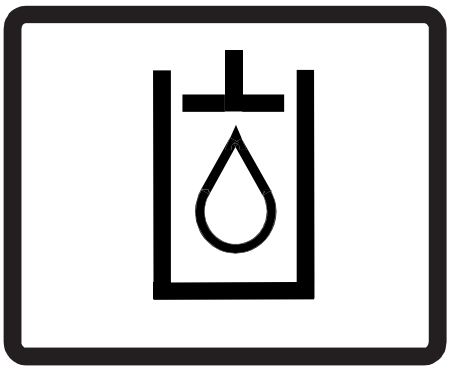	Hydraulic oil
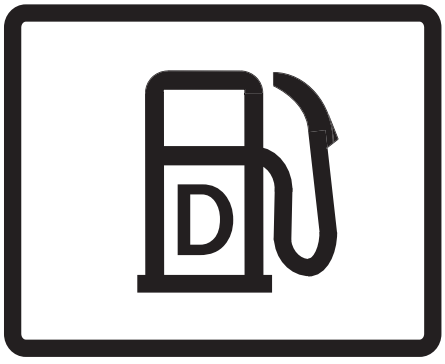	Diesel oil

Decal	Explanation
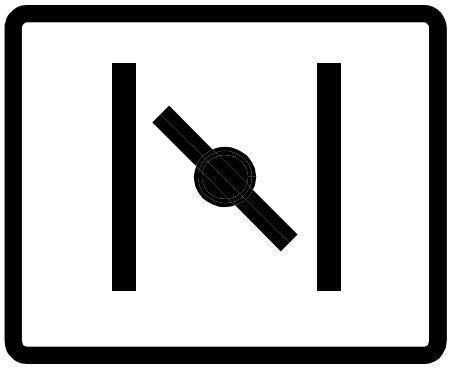	Cold start aid
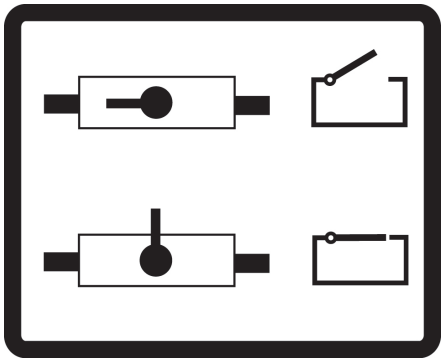	Ball valve open and closed
	Engine oil only
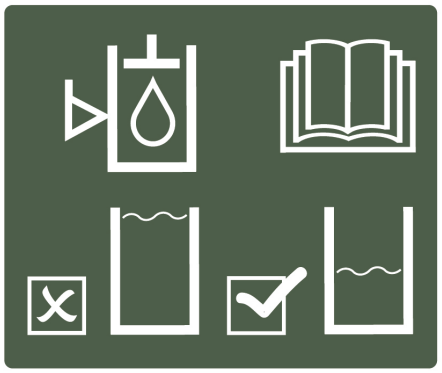	**Important** Do not over fill hydraulic oil tank.

Decal	Explanation
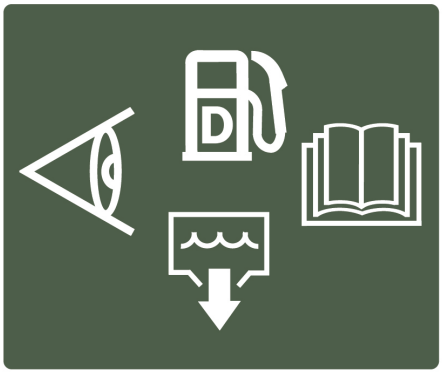	**Important** Check and drain diesel water trap daily.
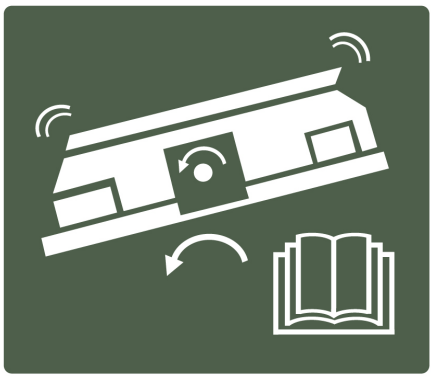	Screenbox speed.
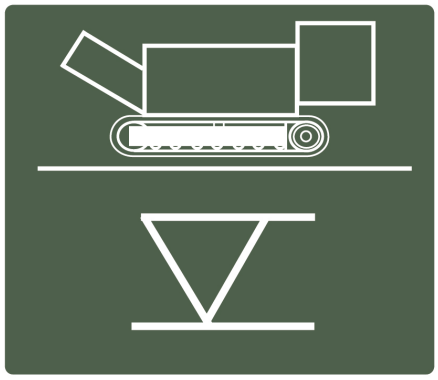	**Important** Machine must be level at all times.
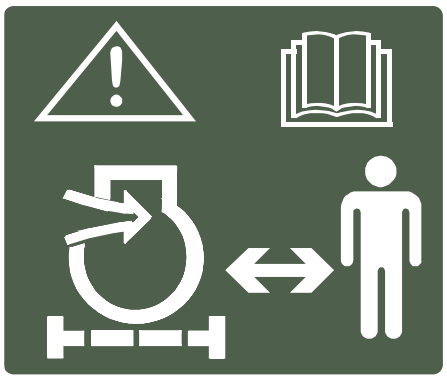	Air intake are must be kept clear at all times.

Decal	Explanation
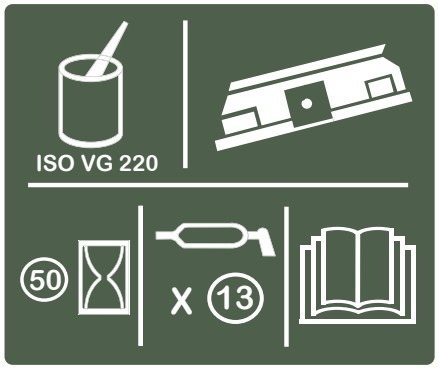	Greasing screenbox 12 grease gun strokes every 50 working hours.
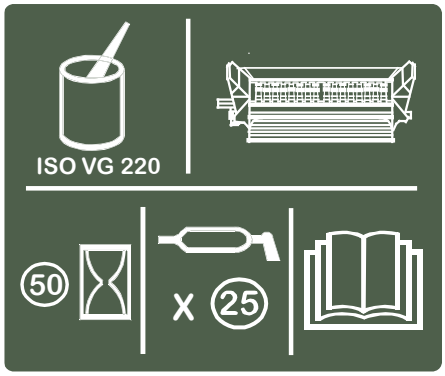	Vibrating grid greasing schedule 25X grease gun pumps every 50 working hours.
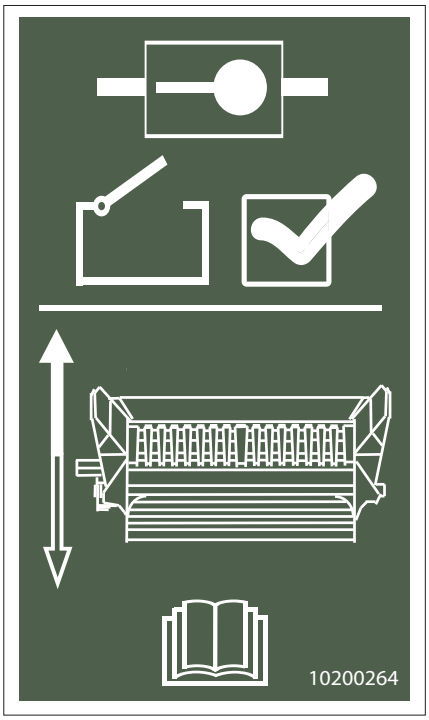	**Important** Ensure vibrating grid ball valve is open. (Machines with vibrating grid only.)

Decal	Explanation
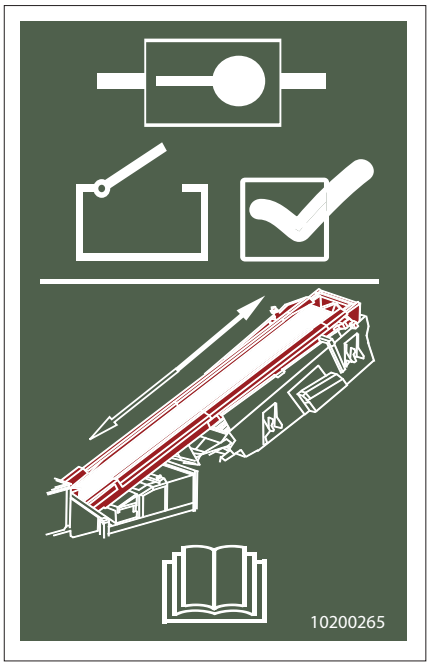	**Important** Ensure main conveyor ball valve is open.
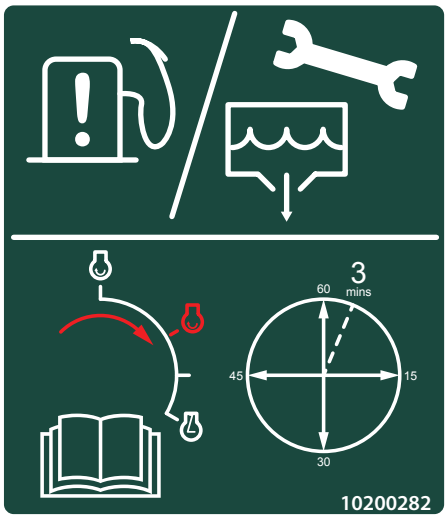	If the fuel supply is interrupted (e.g. fuel level low, water trap maintenance or burst hose) the engine should be primed for 3 minutes before startup by turning the ignition key to the on position as shown.
	Use ultra low sulfur fuel only. (Tier 4 engines)

Decal	Explanation
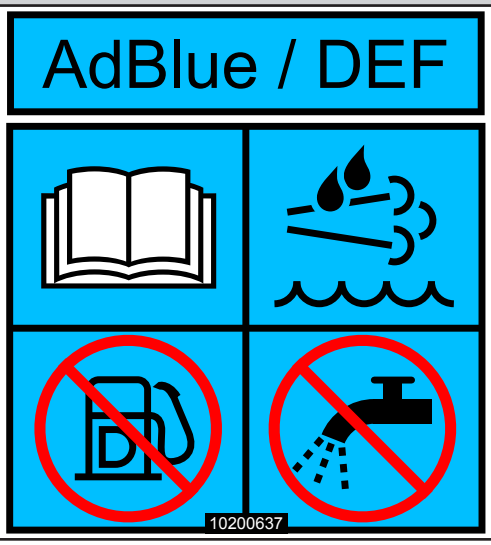	Read and fully understand instructions on refilling urea tank. Refill using correct fluid. Do not use water.

Table of Content

5 Transportation 5-2

5.1 Prior to Transportation 5-2
5.2 Putting the Machine into the Transport Position 5-3
(1) Retracting the Main Conveyor 5-4
(2) Lowering the Tail Conveyor 5-5
(3) Lowering the Screenbox 5-6
(4) Attaching Screen Anti-Rock Stays 5-7
(5) Maintenance Platform Retraction Instructions 5-8
(6) Folding in the Auxiliary Conveyor 5-10
(a) Folding the Extended Auxiliary Conveyor For Transport (Option) 5-14
(7) Close in the Side Conveyors 5-18
(8) Retracting the Tail Conveyor 5-20
5.3 Loading the Machine to the Low Loading Trailer (Track Machine) 5-21
(1) Prior to Haulage 5-21
(2) Ready for Transport 5-22
5.4 Removing Machine from the Low Loading Trailer (Track Machine) 5-23
(1) Radio Control 5-24
(2) Remote Control 5-26
5.5 Transport Tie Down Points 5-27
5.6 Removing Machine from the Prime Mover (Wheel Machine) 5-29
5.7 Attaching/Removing the Machine From the Roll In Bogie (Option) 5-31
(1) Attaching the Roll In Bogie (Option) 5-31
(2) Removing the Roll In Bogie (Option) 5-35

5 Transportation

5.1 Prior to Transportation

⚠ CAUTION

Prior to transportation always check the machine for loose or damaged components. Ensure all loose items are carefully stowed and secured if these are to be transported on the machine.

Check that the travelling dimensions and weight of the machine will be within the regulation limits.

Before transporting the machine, observe the prescribed transport position, admissible speed and itinerary. Only use appropriate means of transport and lifting gear of adequate capacity. Know the overall height to avoid contacting overhead obstructions such as bridges, power lines etc.

The preparations to move equipment by an articulated lorry should be supervised by a minimum of two persons. Ensure persons transporting the machine adhere to all safety signs and procedures.

Before transportation on public roads, ensure the machine has been properly secured with no loose material left in or on the machine. Always observe the valid traffic regulations and, if necessary, ensure beforehand that the machine is in a condition compatible with these regulations.

Extreme caution is required when transporting machinery on site. Soft or uneven ground may cause accidents. On sloping terrain, always adapt your travelling speed to the relevant ground conditions. Never change to a lower gear on a slope. Always change gear before reaching a slope.

The machine is remote controlled and may start without notice. Stay clear of the machine. The machine must be loaded and transported only in accordance with the operating instructions. For manoeuvring the machine, observe the prescribed transport position, admissible speed and itinerary. Use only appropriate means of transport and lifting equipment and where applicable of adequate capacity. The re-commissioning procedure must be strictly in accordance with the operating instructions. Before travelling with the machine, check that the braking and any signalling and lighting systems are fully functional. Before setting the machine in motion always check that the accessories have been safely stowed away.

On wheeled machine:

Ensure wheel nuts are torqued between 500 to 550 ft.lb (69 to 76 kg.m) prior to transport. Recheck the wheel nut torque every 150 miles (200 km).

Connect and check the braking system.

Check your tires for:-

- correct pressure
- cuts or bulges
- nails or spikes
- uneven or excessive wear
- missing valve caps

Check your wheels for:-

- damaged rims
- missing or loose wheel nuts or bolts
- obvious misalignment

Have cuts or punctures repaired by authorised personnel before adding air. Beware that an over-inflated tire can explode and cause serious injury or death.

5.2 Putting the Machine into the Transport Position

Prior to transportation the machine must be put into the transport position.

⚠ DANGER

Use a suitable maintenance platform when working at a height. Do not climb onto working or moving machinery.

Use appropriate lifting equipment of adequate capacity. Never allow anyone to move components without adequate lifting equipment.

⚠ WARNING

Nip Point Hazard

Nip points exist where rams and moving assemblies exist. Stay clear of all moving sub assemblies on the machine.

Entanglement hazard

Ensure all personnel are clear from the machine.

Ensure all machine components are stopped before putting the machine into the transport position.

Wear personal protective equipment.

Prior to transportation always check the machine for loose and/or damaged components.

Fasten all loose parts, replace missing items or make repairs as found necessary to ensure that all components are safely secured during transportation

Ensure that all material has been processed and that no material is left in the machine and that all material has run off the conveyors.

⚠ CAUTION

Ensure that all safety signs are present.

Fall hazard.

Falling material hazard.

Crush hazard.

NOTICE

The machine must be put into the transport position in the correct order.

Do not raise or lower any part of the machine with securing pins in position. Ensure that all pins are removed before starting the machine and raising or lowing machine components.

Use the control levers in a smooth and controlled manner. Do not rush or jerk the controls.

It is mandatory to have a Banksman present when putting the machine in the transport position.

Rinser unit only:

Remove top deck spray bars hoses (if fitted) before moving the main conveyor and screenbox to the transport position.

PROCEDURE

1. Observe all safety warnings.
2. Start the machine, Reference: Chapter 7.
3. Remove top deck spray bars hoses (if fitted).
4. Retract the main conveyor.
5. Prepare tail conveyor before lowering the screenbox.
6. Lower the screenbox.
7. Prepare the maintenance platform for transport.
8. Retract the tail conveyor. Ensure the tail conveyor does not impact the screen box.
9. Close in the auxiliary conveyor.
10. Close in the side conveyors.

(1) Retracting the Main Conveyor

⚠ WARNING

Wear personal protective equipment.

Ensure all personnel are clear from the machine.

NOTICE

Rinser unit only:

Remove top deck spray bar hoses before moving the main conveyor and screenbox to the transport position.

PROCEDURE

1. Observe all safety warnings.
2. Lower lever in auxiliary valve to retract main conveyor fully.

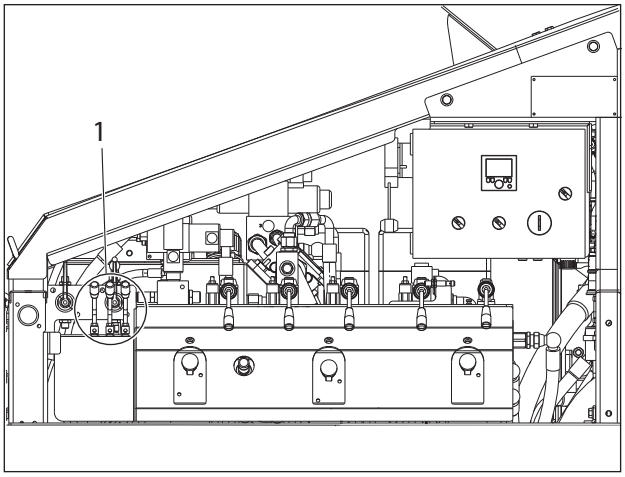

Figure 5.1 - Main Conveyor Lever

(2) Lowering the Tail Conveyor

⚠ WARNING

Wear personal protective equipment.

Ensure all personnel are clear from the machine.

NOTICE

Take care not to nip the conveyor belt between moving parts.

PROCEDURE

1. Observe all safety warnings.
2. Remove retaining pins from the tail conveyor struts.

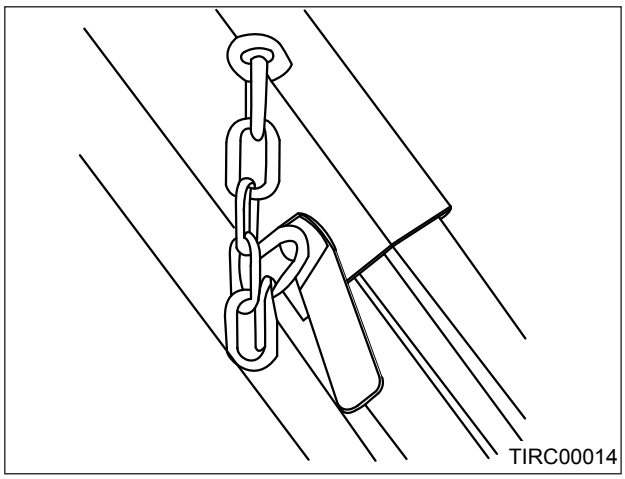

Figure 5.2 - Tail Conveyor Pin

3. Move down the tail conveyor lever to lower the tail conveyor feedboot section.

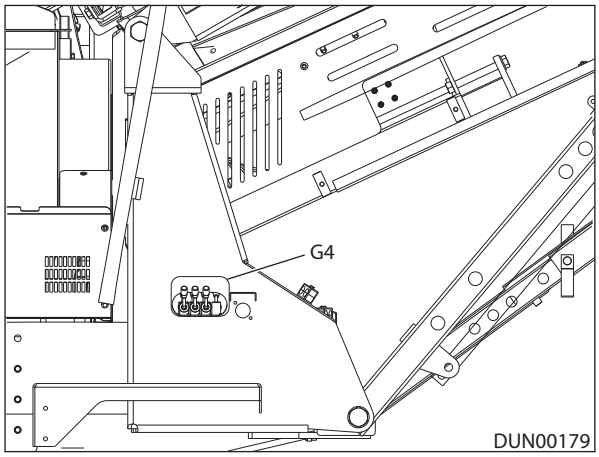

Figure 5.3 - Tail Conveyor Lever

4. Position the tail conveyor for lowering the screen box.

(3) Lowering the Screenbox

⚠ WARNING

Wear personal protective equipment.

Fall hazard when removing pins from screen box support legs.

NOTICE

Rinser unit only important

Remove top deck spray bar hoses before moving main conveyor and screenbox for transport.

PROCEDURE

1. Observe all safety warnings.
2. Remove pins and spring pins, 1 off LHS/RHS, from the screen box support legs.

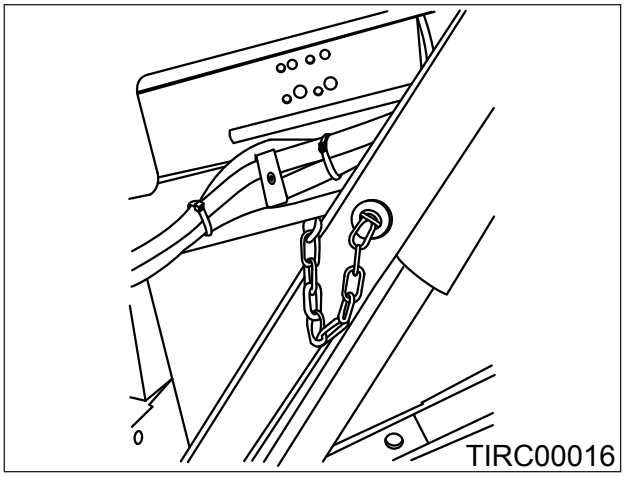

Figure 5.4 - Screenbox Support Leg Pins

3. Slide the box section, down into transport position.
4. Follow the instructions on the control lever decal and move the screenbox lever down, to lower the screen box.

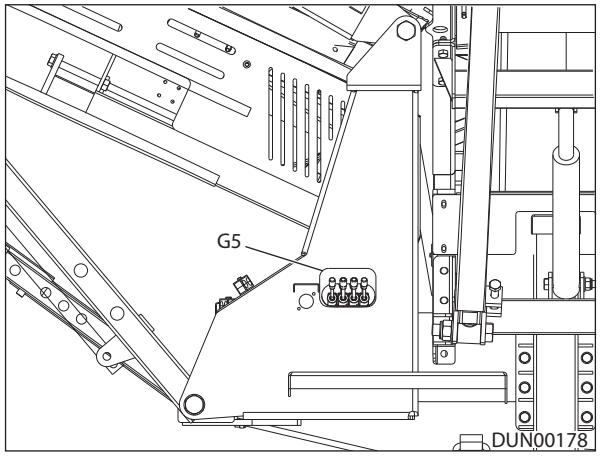

Figure 5.5 - Screenbox Lever

5. Reinsert the screen box support leg pins and spring pins, 1 off LHS/RHS.

(4) Attaching Screen Anti-Rock Stays

⚠ WARNING

Wear personal protective equipment.

Fall hazard.

Switch off, tag out and lock out before working at the machine.

NOTICE

The screen anti-rock stays must be attached correctly to the machine prior to transport.

PROCEDURE

1. Observe all safety warnings.
2. Place the anti-rock stays (Item 8), 1 off RHS and 1 off LHS, onto the screen.
3. Insert bolts to secure the anti-rock stays in place.

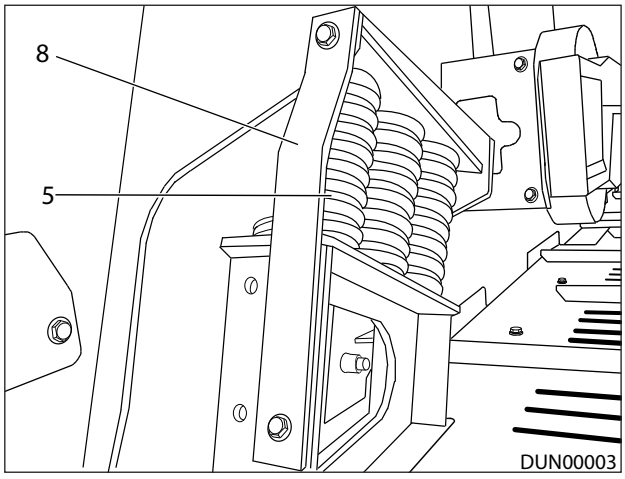

Figure 5.6 - Screen Anti-rock Stays

(5) Maintenance Platform Retraction Instructions

⚠ WARNING

Wear personal protective equipment.

Fall hazard from maintenance platform

Switch off the machine and implement the lockout procedure.

NOTICE

Machine must be on level ground prior mounting.

All control levers must be in the neutral (non-operational) position.

PROCEDURE

1. Observe all safety warnings.
2. Remove chains from (Item 4) position on each side of the maintenance platform
3. Fold up each of the end sections (Item 5) and secure into transport position with cable tie.

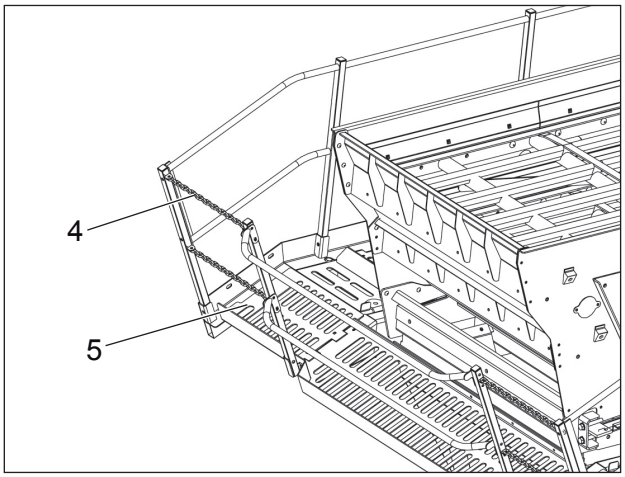

Figure 5.7 - Maintenance Platform Working Position

4. Remove the bolts from the ladder (Item 3) and store, remove ladder from the maintenance platform and store for transport.

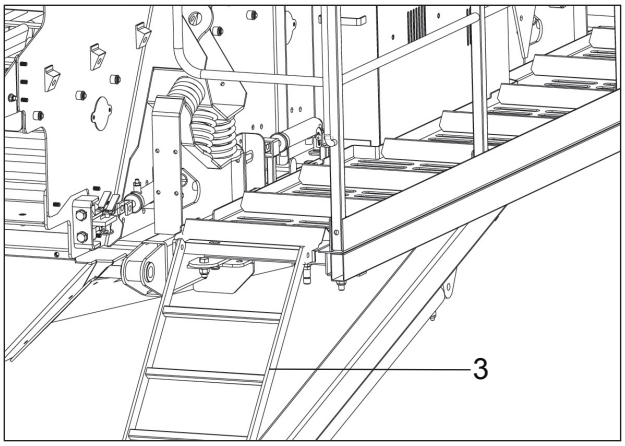

Figure 5.8 - Step Ladder Securing Bolts

5. Fold up maintenance platform section and cable tie into position.
6. Take out four retaining bolts at each corner of screenbox (Item 2).
7. Push maintenance platform inwards on both sides.

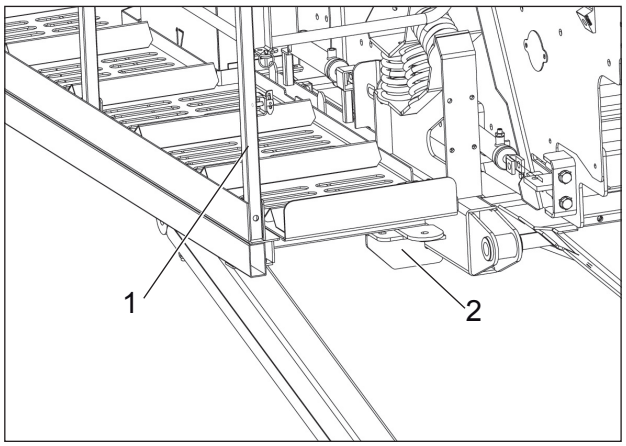

Figure 5.9 - Maintenance platform Retaining Bolts

8. Insert the four retaining bolts at each corner of the screenbox into the transport position.

(6) Folding in the Auxiliary Conveyor

⚠ WARNING

Wear personal protective equipment.

PROCEDURE

1. Observe all safety warnings.
2. Remove the auxiliary conveyor support chain.

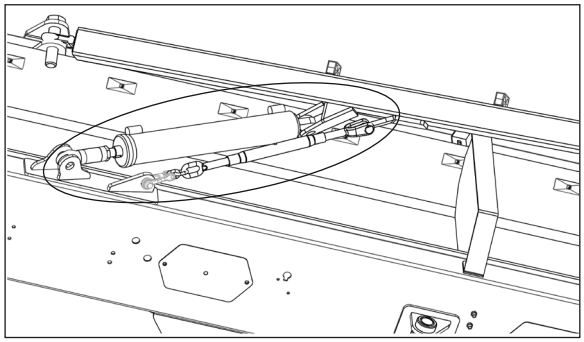

Figure 5.10 - Auxiliary Conveyor Support Chain

3. Remove the telescopic support leg safety pin.

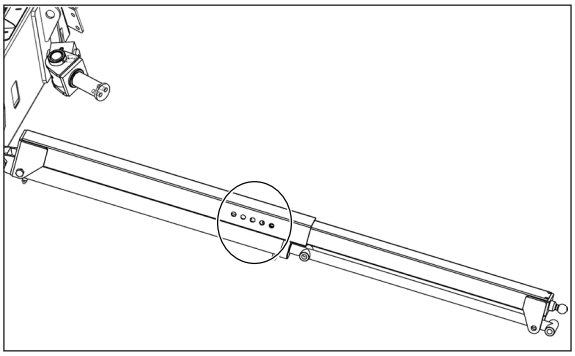

Figure 5.11 - Auxiliary Conveyor Safety Pin

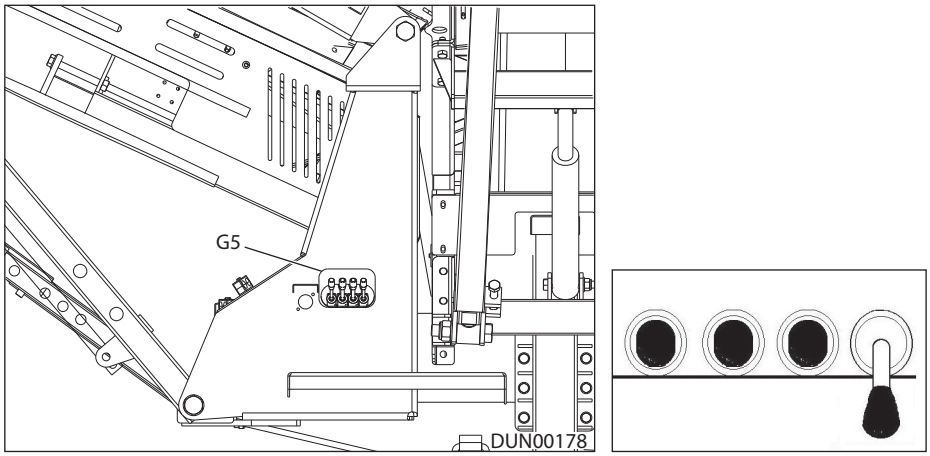

Figure 5.12 - Auxiliary Conveyor Lever

4. Rotate conveyor into position shown by lowering the auxiliary conveyor (lower ram) lever.

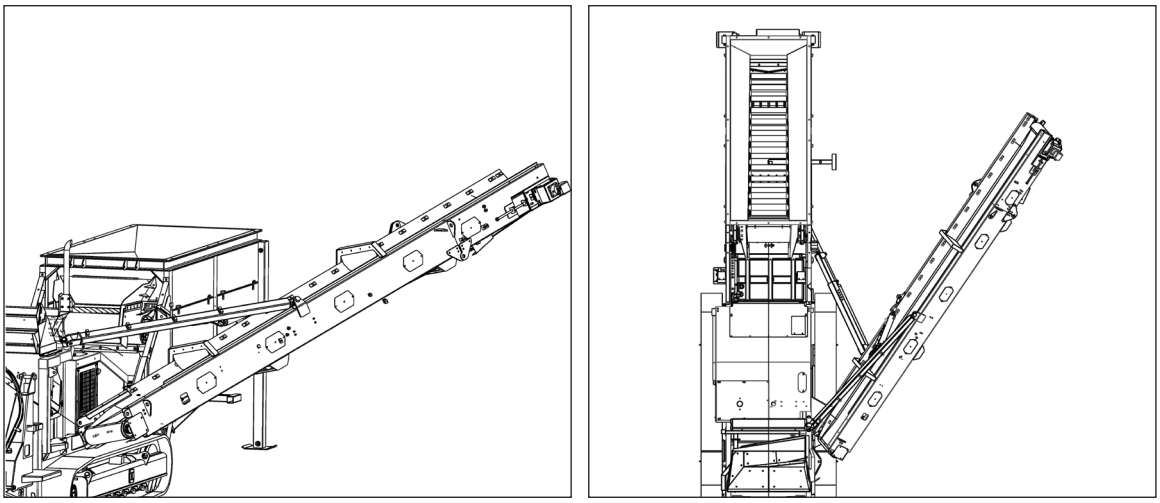

Figure 5.13 - Auxiliary Conveyor

5. Rotate the conveyor into the position shown by lowering the auxiliary conveyor (upper ram) lever.

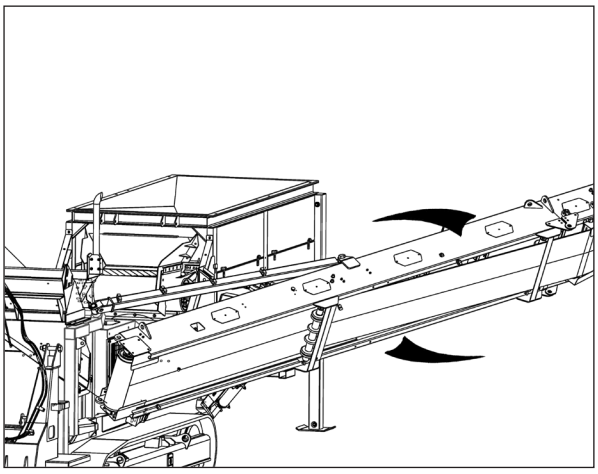

Figure 5.14 - Auxiliary Conveyor Rotated

6. Bring the conveyor towards the machine by lowering the auxiliary conveyor (lower ram) lever. Stop moving once the conveyor rests on the lower transport bracket.
7. Ensure that you have achieved the correct angle.

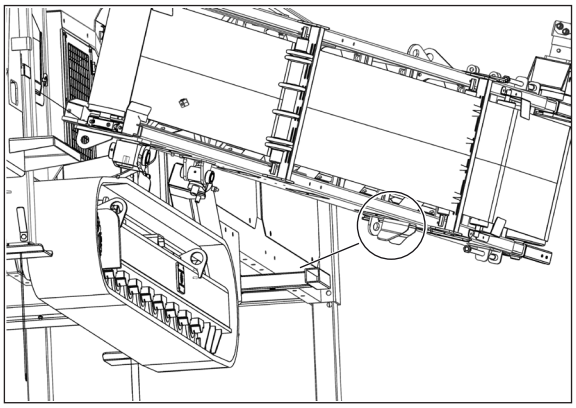

Figure 5.15 - Correct Angle

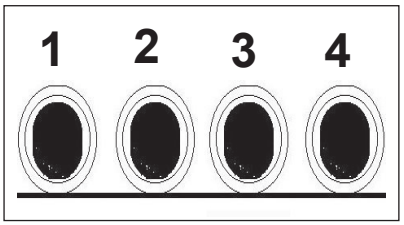

Figure 5.16 - Control Levers

8. If conveyor is closing to low adjust angle by raising lever 3 .

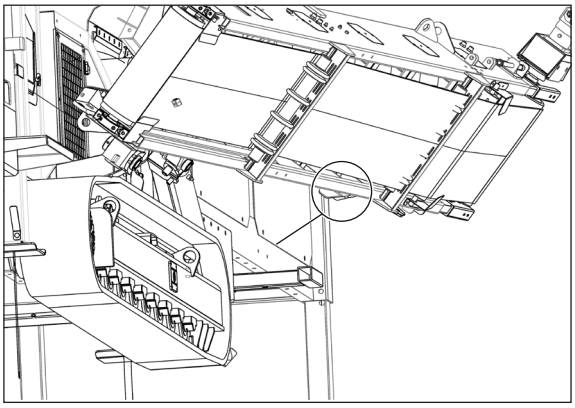

Figure 5.17 - Angle Too Low

9. If conveyor is closing to high adjust angle by lowering lever 3.

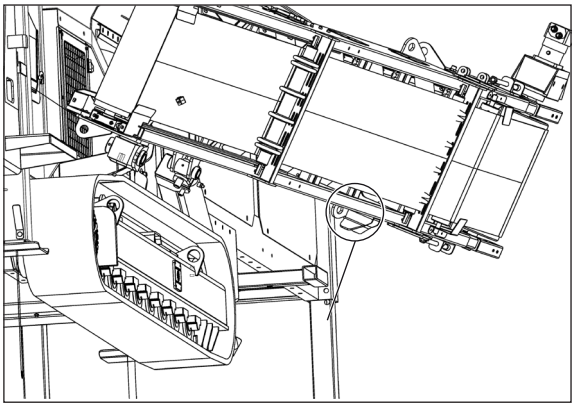

Figure 5.18 - Angle Too High

10. Once the conveyor is located correctly on the lower transport bracket rotate into final transport position by lowering lever 3.
11. When in position attach top transport bracket (Item 1).

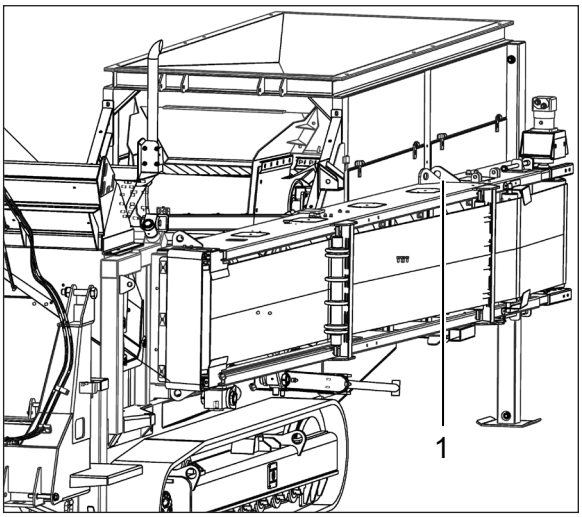

Figure 5.19 - Transport Bracket

(a) Folding the Extended Auxiliary Conveyor For Transport (Option)

⚠ DANGER

Fall Hazard. Do not climb onto working or moving machinery. Use suitable lifting equipment when working at a height. Only use lifting equipment capable of lifting 2,500 kg. NEVER work under suspended loads.

⚠ WARNING

Hazardous nip and crush points. Keep clear of folding equipment. Wear personal protective equipment. Switch off, tag out and lock out before working at the machine.

Ensure all nuts, bolts and wedges are inserted correctly before using the maintenance platform.

NOTICE

Machine must be on level ground prior mounting. All control levers must be in the neutral (non-operational) position.

PROCEDURE

1. Observe all safety warnings.
2. Using suitable lifting equipment support the weight of the conveyor using the lifting points.

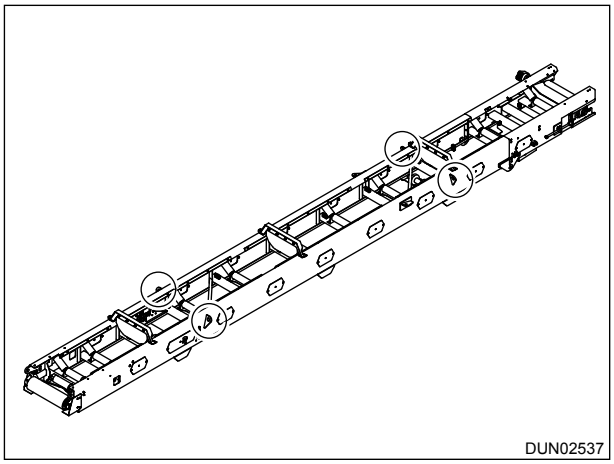

Figure 5.20 - Conveyor Lifting Points

3. Disconnect the pipe drive and return hoses using supplied quick releases.
4. Remove auxiliary conveyor feed boot rubber to pivot beam using three rubber clamp plates and locking nuts.

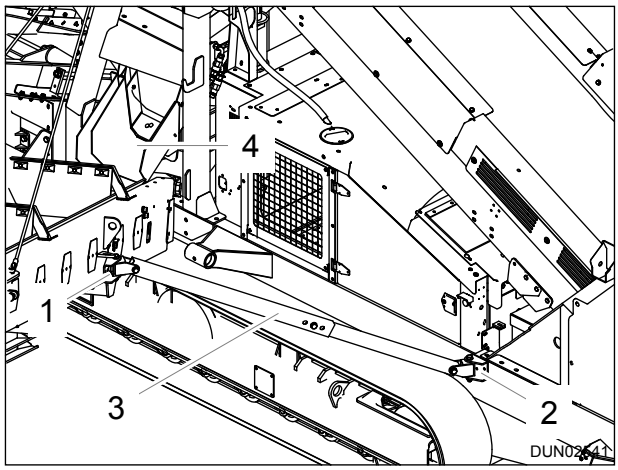

Figure 5.21 - Auxiliary Conveyor in Working Position

5. Remove the chute extension (Item 4) to top deck chute.
6. Remove the feed boot from the conveyor.
7. Remove the upper and lower telescopic stays (Item 3).
8. Remove the radial stays joints from the conveyor (Item 1) and from the chassis of the machine (Item 2), Reference: Figure 5.21.

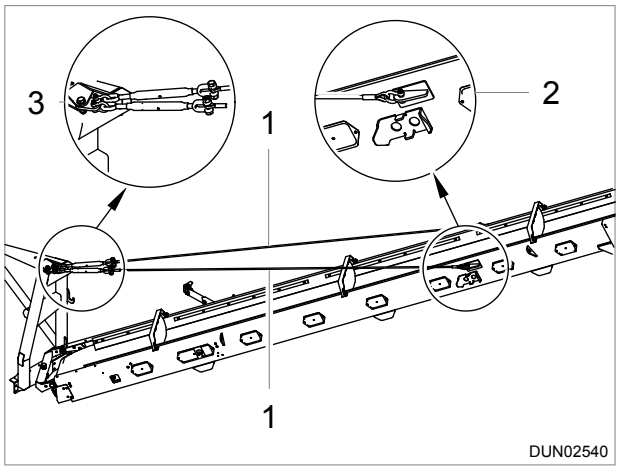

Figure 5.22 - Removing the Wire Ropes

9. While still supporting the weight of the conveyor, detach the wire ropes (Item 1) from the conveyor at position 2, Reference: Figure 5.22.
10. While still supporting the weight of the conveyor, detach the wire ropes (Item 1) from the conveyor at position 3.
11. While still supporting the weight of the conveyor, remove the bolts (Item 2) securing the conveyor to the pivot beam (Item 1), Reference: Figure 5.23.

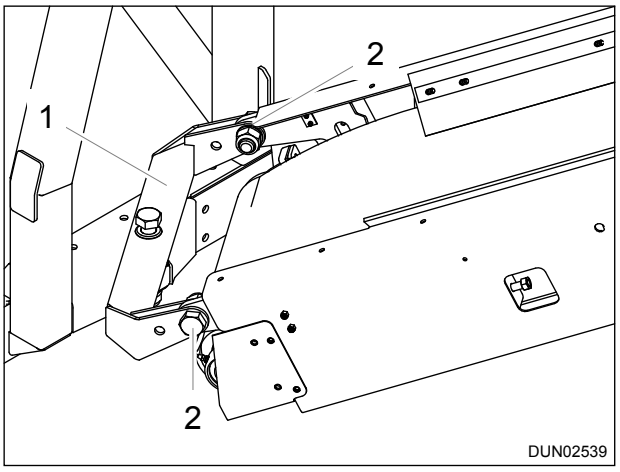

Figure 5.23 - Pivot Beam

12. Using suitable lifting equipment, lift the conveyor vertically clear of machine, and rest conveyor on level ground.

    » *To prevent damaging conveyor, place wooden blocks under the frame.*

13. Remove the pivot beam from the machine.
14. Remove the conveyor anti-rollbacks (Item 2) and conveyor guards from the conveyor.

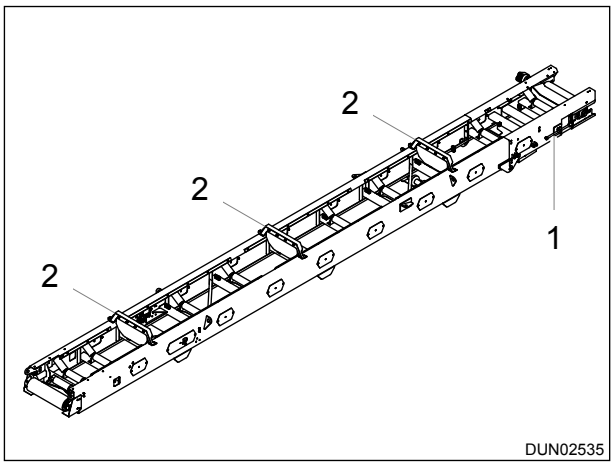

Figure 5.24 - Conveyor Guards

15. With lifting chains still located in brackets supporting the weight of the conveyor, rest the conveyor flat on its side.

    » *To prevent damaging conveyor, place wooden blocks under the frame during this operation.*

16. Secure the transport bracket (Item 4) in the transport position.

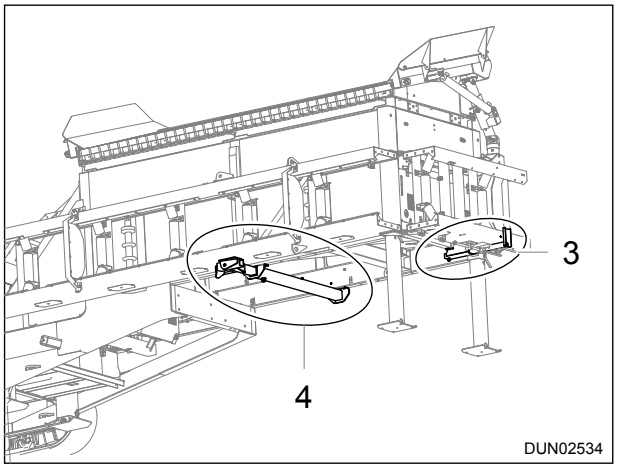

Figure 5.25 - Transport Brackets

17. Using suitable lifting equipment, lift the conveyor and rest the conveyor on the transport bracket (Item 4), Reference: Figure 5.25.

    » Ensure the conveyor rests on the transport hook (Item 4), Reference: Figure 5.26.

18. Attach the transport tie (Item 2), Reference: Figure 5.26.

19. Remove the bolts securing the conveyor head section in working position and fold the head section into the transport position.

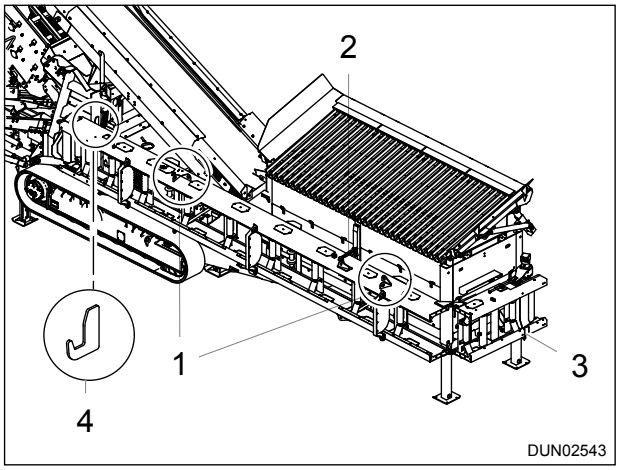

Figure 5.26 - Conveyor in Transport Position

20. Fit the transport bracket (Item 3) at the rear of the machine to secure the head section of the conveyor in transport position.

(7) Close in the Side Conveyors

⚠ WARNING

Wear personal protective equipment.

Ensure all personnel are clear from the machine.

NOTICE

Take care not to nip the conveyor belt between moving parts.

PROCEDURE

1. Observe all safety warnings.
2. Remove the pins holding the side conveyors in the transport position.

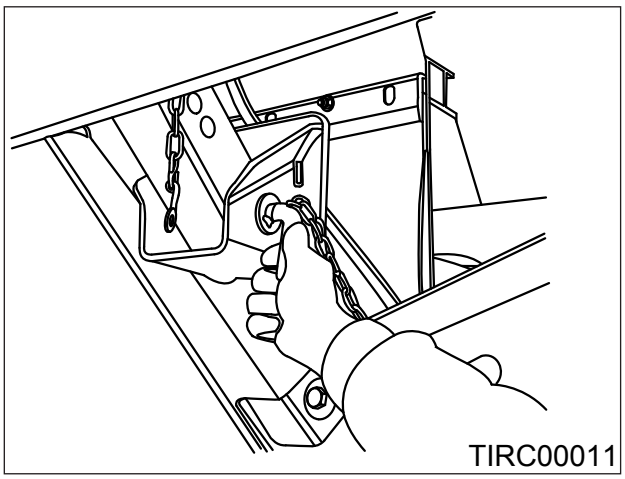

Figure 5.27 - Side Conveyor Pins

3. Move down the right hand side conveyor lever to close in the right hand side conveyor.

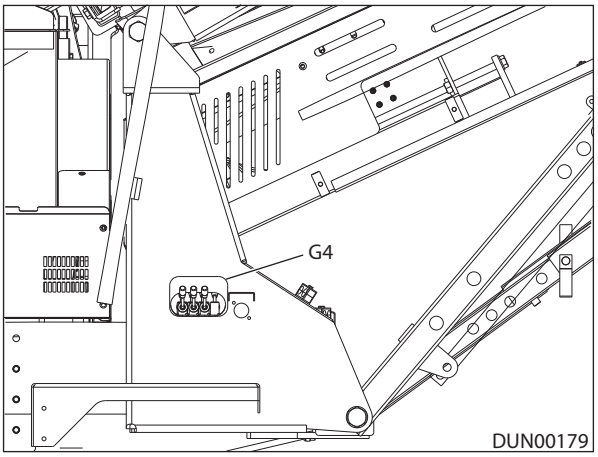

Figure 5.28 - Right Hand Side Conveyor Control Lever

4. Move down the left hand side conveyor lever to close in the left hand side conveyor.

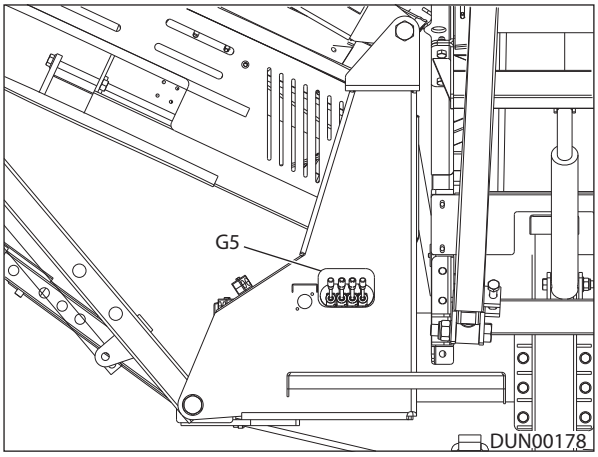

Figure 5.29 - Left Hand Side Conveyor Control Lever

5. Pin the side conveyors into the transport position, using the pin, washer bolts and spring pin.

(8) Retracting the Tail Conveyor

⚠ WARNING

Wear personal protective equipment.

Ensure all personnel are clear from the machine.

NOTICE

Take care not to nip the conveyor belt between moving parts.

Ensure that the tail conveyor does not make contact with maintenance platform whilst folding up.

PROCEDURE

1. Observe all safety warnings.
2. Move down the tail conveyor lever to lower the tail conveyor feedboot section.
3. Move up tail conveyor lever to raise the tail conveyor end section

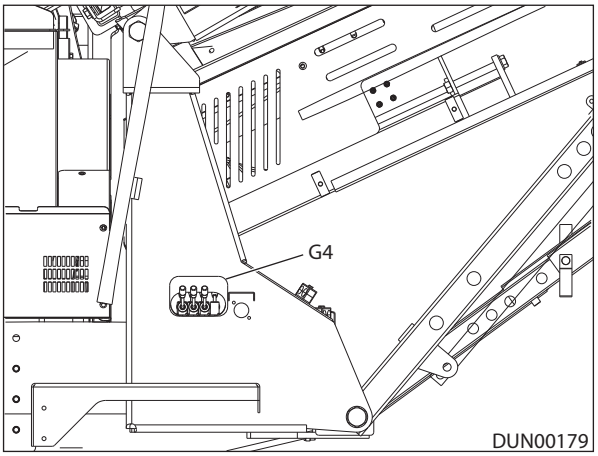

Figure 5.30 - Tail Conveyor Control Levers

4. Bolt transport stays (Item 1) to secure tail conveyor in the transport position.

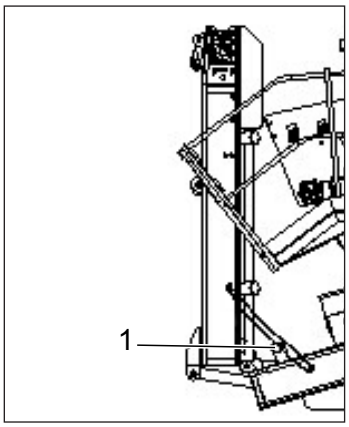

Figure 5.31 - Tail Conveyor Transport Stays

5.3 Loading the Machine to the Low Loading Trailer (Track Machine)

⚠ WARNING

Wear personal protective equipment.

Crush Hazard

NOTICE

Securing the machine and any loose items to the low loader trailer is the responsibility of the haulage contractor.

PROCEDURE

1. Before loading, the plant must be prepared for transportation, refer to putting the machine into the transport position.
2. Check that the travelling dimensions and weight, when loaded, will be within the regulation limits, refer to plant specification and information.
3. Make sure suitable ramps are positioned at the end of the trailer to load the machine.
4. Ensure all loose items are carefully stowed and secured if these are to be transported on the plant.
5. Check that any loose items transported with the machine will not cause a hazard while loading.
6. Ensuring that the engine/motors are running at idle, load the machine slowly onto the trailer, manoeuvring the machine with the tracks, using the umbilical control or the remote radio control, if fitted.
7. Stop the machine.

(1) Prior to Haulage

PROCEDURE

1. Check for loose parts or debris on the machine.
2. Ensure all pins are secured with ‘R’ pins and Split pins.
3. Raise the support legs fully.
4. Ensure persons transporting the machine adhere to all safety signs and procedures.

(2) Ready for Transport

⚠ WARNING

Do not transport this machine without it being properly secured on to the lowloader.

Before transporting this machine you must read and understand the Safety section in this manual.

NOTICE

Before tracking the machine ensure the engine speed is idle.

The machine should now be ready for transport.

Secure machine with Chain shackles to the Lowloader.

Use securing eyes (Item 1) fitted on the machine undercarriage on either side.

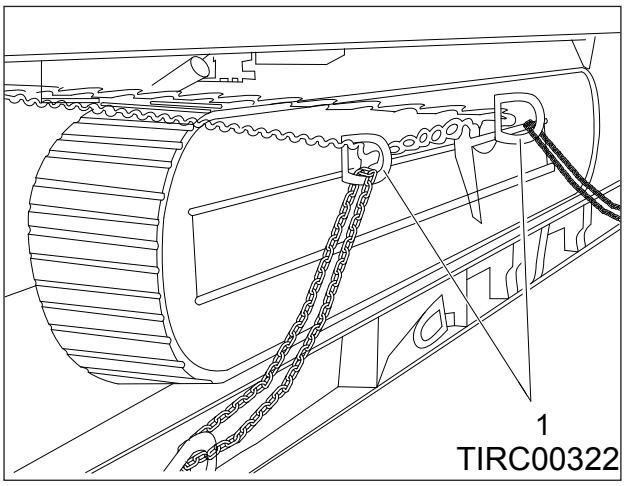

Figure 5.32 - Tracks Secured on Lowloader

5.4 Removing Machine from the Low Loading Trailer (Track Machine)

A tracked machine will normally be secured to a low loader trailer.

⚠ WARNING

Wear personal protective equipment.

Ensure all personnel are clear from the machine.

NOTICE

Removing the fastenings securing the machine and any loose items from a trailer is the responsibility of the haulage contractor.

Refer to Chapter 4, for complete specification on radio/remote control units before attempting the following procedures.

All control levers must be in the neutral (non-operational) position.

The screen and tail conveyor must be raised to allow adequate ground clearance for the tail conveyor when the machine is being loaded or unloaded.

Care must be taken not to raise the screen too far or the conveyor will bend the maintenance platform.

Ensure that tail conveyor does not impact on screen box or maintenance platform when raising.

(1) Radio Control

PROCEDURE

1. Observe all safety warnings.
2. Prepare the low loading trailer, for removing the machine on tracks.
3. Make sure suitable ramps are positioned at the end of the trailer to unload the machine.
4. Remove the pins, spring pins and washers from the LH & RH sides of the screenbox and tail conveyor.

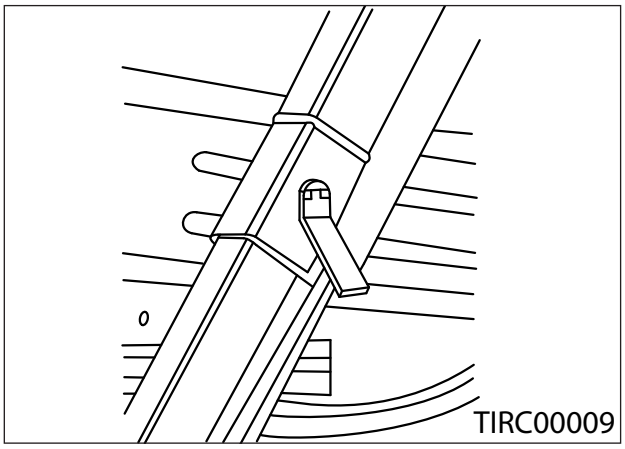

Figure 5.33 - Conveyor Pins

5. Start the machine.
6. Ensure that the engine/motors are running at idle while manoeuvring.
7. Move up, the screenbox lever to raise the screenbox.

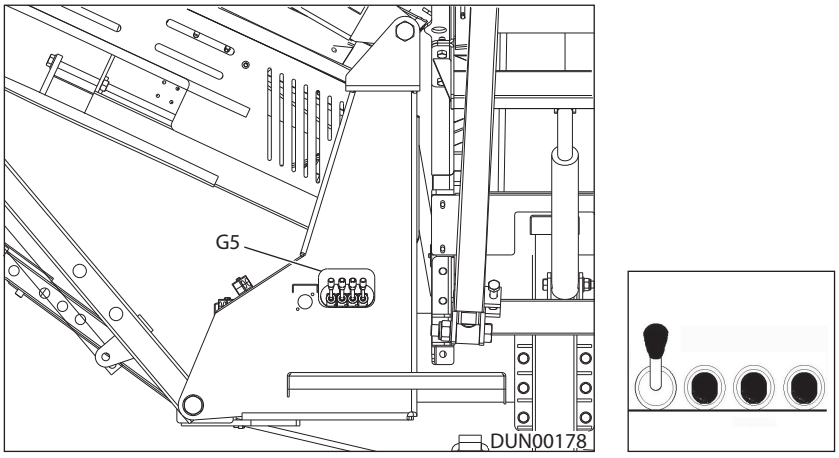

Figure 5.34 - Screenbox Lever

8. Move up, the tail conveyor lever to raise the tail conveyor.

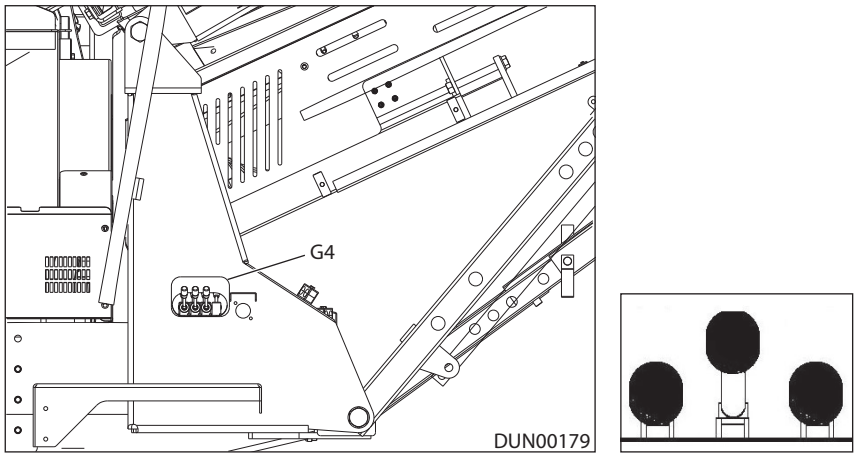

Figure 5.35 - Tail Conveyor Lever

9. The screenbox and tail conveyor are raised so that they clear the ground when loading and unloading the machine from the low loader.
10. Move the track levers down, to activate the tracks.
11. Activate the radio tracking control unit.
12. Operate the track buttons on the radio tracking control unit to move the machine off the low loading trailer.

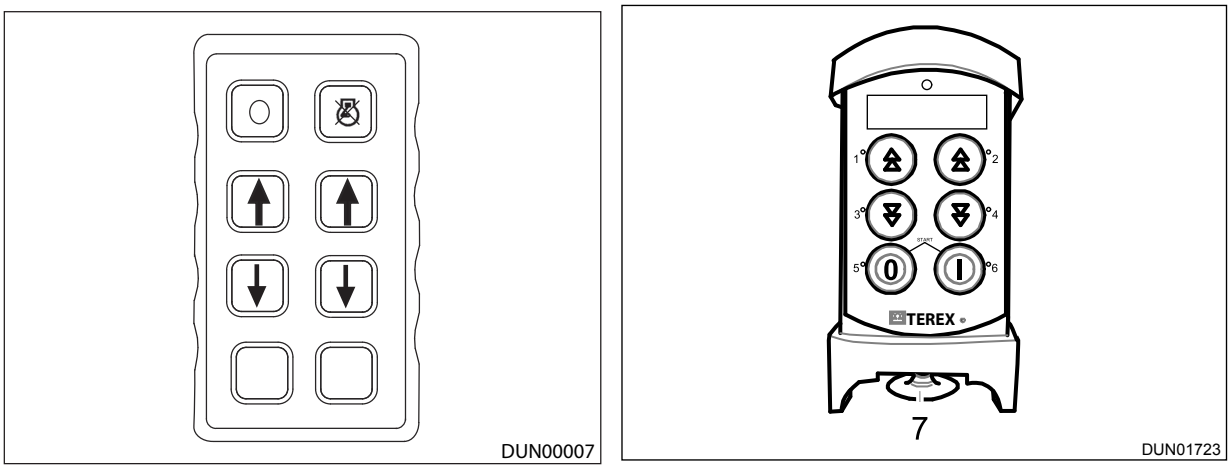

Figure 5.36 - Radio Tracking Control Units

13. Press the forward or backward buttons, on the corresponding handset, to move the machine in the desired direction.
14. Unload the machine slowly off the trailer into a safe position or machine operating position,
15. Move the machine into the required position on the work site.
16. Switch off the machine.

(2) Remote Control

Carry out steps 1 to 9 of the radio control procedure.

PROCEDURE

1. Remove the dummy plug (item 1) and insert the remote control unit plug into it‘s socket at the rear of the machine.

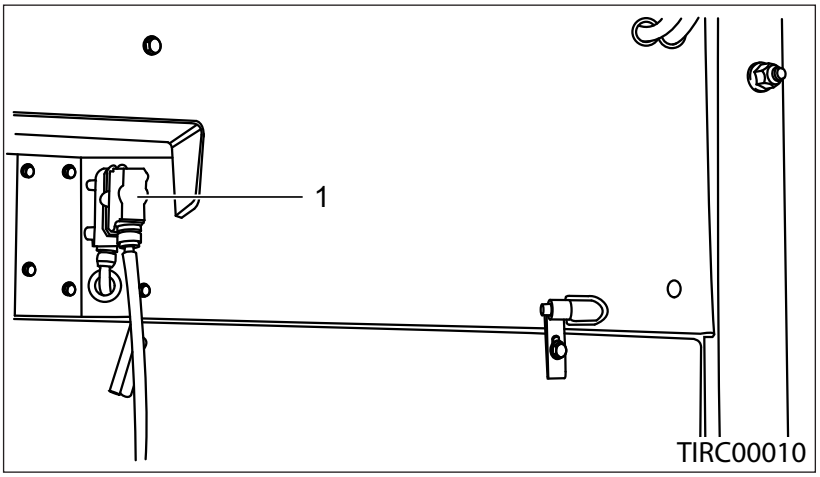

Figure 5.37 - Remote Control Unit Connection

2. Operate the track buttons on the remote control unit to move the machine off the low loading trailer.

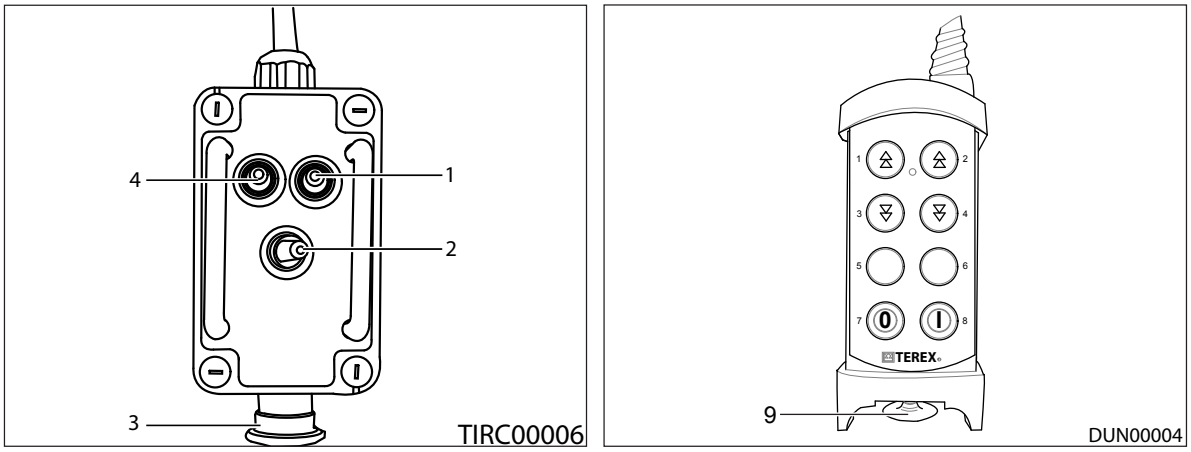

Figure 5.38 - Remote Tracking Control Units

3. Press the forward or backward buttons, on the corresponding handset, to move the machine in the desired direction.
4. Unload the machine slowly off the trailer into a safe position or machine operating position,
5. Move the machine into the required position on the work site.
6. Switch off the machine.

5.5 Transport Tie Down Points

NOTICE

When transporting the machine, it is the responsibility of the haulage contractor to safely secure it to the transporter.

This machine is fitted with transport tie down brackets, the brackets are indicated on the machine by a safety symbol. Under NO circumstances should these be ever used as a lifting point for the machine. The drawing highlights the eight tie down locations provided on the machine. Each location is fitted with a five tons rated D-shackle and highlighted by the Transport Tie Down Points decal.

The locations are exclusively for the purposes of tying down the plant for transport and must not be used for any other purposes.

Note: The tie down locations must never be used to lift the machine.

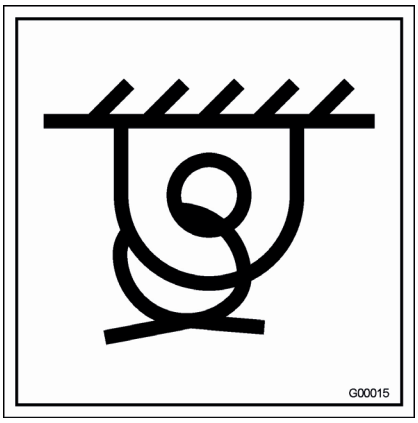

OMA00588

Figure 5.39 - Tie Down Points Symbol

The available tie down points are suitable for transport by road and sea, but not by rail. When transporting by sea, anti-slip mats are required between the machine tracks and the vessel bed.

Note: The loading area and shipping platform must be clean, free from ice, snow, and other slippery materials.

The machine requires all eight tie down points to be secured in the manner detailed in the Transport Tie Down Points drawing.

The drawing highlights the direction and acceptable slinging range for the tying down device. To secure the product, the directions and ranges noted must be strictly observed.

Note: Lashing and lashing accessories must be individually rated to a minimum of five tons.

On the outside of the chassis, there are four shackles located to the front and rear of the plant. These four points must be secured in the direction away from the crawler tracks within the window highlighted in the drawing. These locations manage a considerable portion of the plants longitudinal restraint, also provide some lateral restraint, and must be secured accordingly.

Inside the chassis are a further four shackles to the front and rear of the track subframe. These four points must be secured in the direction diagonally away from the crawler tracks within the window highlighted in the drawing. These locations manage a considerable portion of the plants lateral restraint, also provide some longitudinal restraint, and must be secured accordingly.

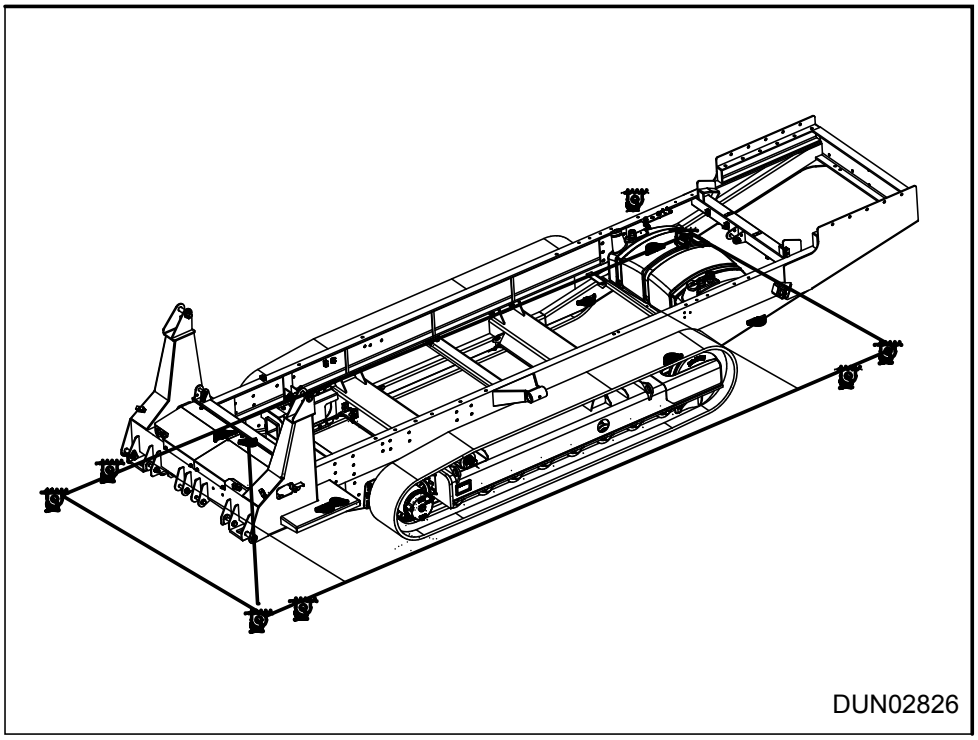

Figure 5.40 - Location of Tie Down Points

5.6 Removing Machine from the Prime Mover (Wheel Machine)

⚠ WARNING

Crush hazard from lowering jacking legs. Keep clear of moving components. Wear personal protective equipment.

NOTICE

All control levers must be in the neutral (non-operational) position.

Slightly activate the jacking leg lever to release the tension from the retaining pins, allowing for easy removal of the pins.

PROCEDURE

1. Observe all safety warnings.
2. Start the machine.
3. Remove the pins and spring pins from the hydraulic jacking legs.

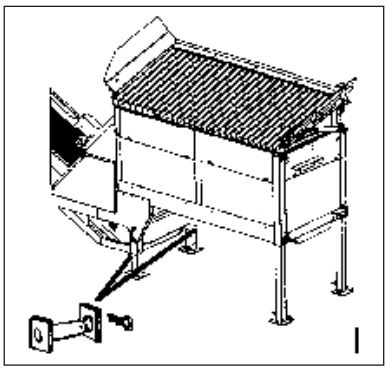

Figure 5.41 - Jacking Legs Pins

4. Move down the lever of the auxiliary control valve to extend the jacking legs and raise the feeder.

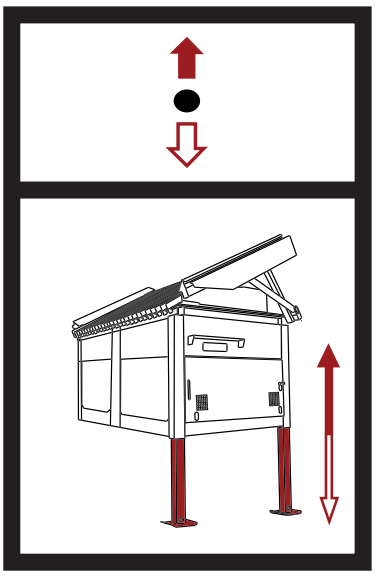

Figure 5.42 - Jacking Legs Operation Decal

5. Remove prime mover.
6. Move up the lever of the auxiliary control valve to retract the jacking legs and lower the feeder.
7. Re-insert pins and spring pins.
8. Switch off the machine.

5.7 Attaching/Removing the Machine From the Roll In Bogie (Option)

(1) Attaching the Roll In Bogie (Option)

⚠ WARNING

Wear personal protective equipment.

Ensure all personnel are clear from the machine

Attaching and removing the roll in bogie must be undertaken on flat, level ground that is capable of supporting the machines weight.

NOTICE

The preparations to move equipment using the roll in bogie should be supervised and undertaken by a minimum of two persons.

PROCEDURE

1. Observe all safety warnings.
2. Attach the fifth wheel plate (Item 1) into the position.

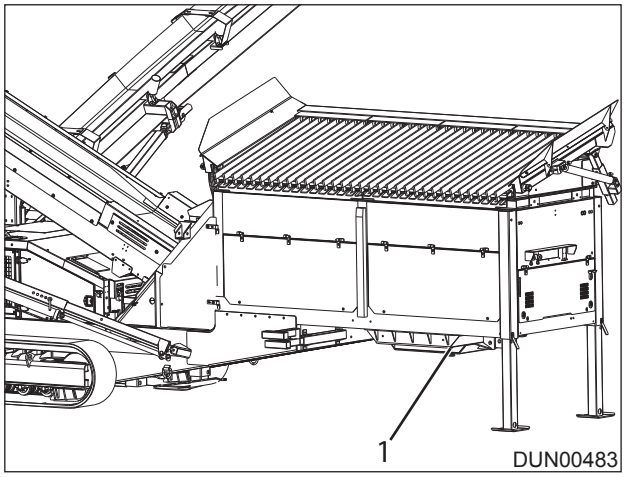

Figure 5.43 - Fifth wheel plate assembly

3. Start the machine.
4. Make sure the screen and tail conveyor are in the raised position.
5. Remove the pins from the jacking legs.

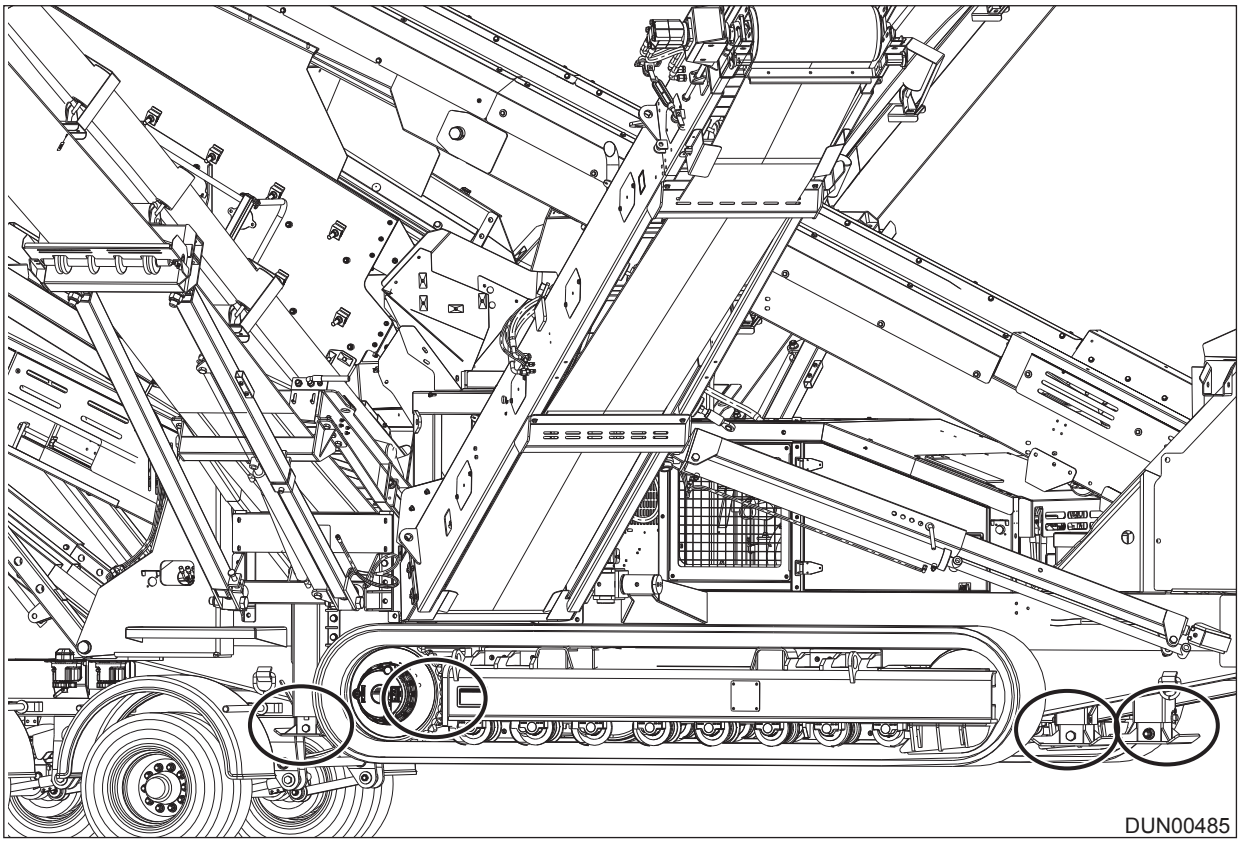

Figure 5.44 - Machine Jacking legs retracted

6. Check that no obstructions are under the jacking legs before commencing. An operator must be present at each side of the machine to ensure the machine raises correctly. Follow the instructions on the control lever decals to raise the jacking legs.

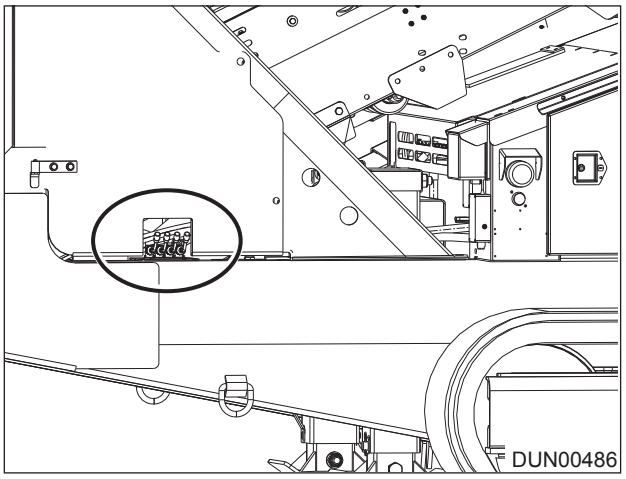

Figure 5.45 - Jacking leg levers

7. Raise the two front jacking legs until the front of the machine is two inches off the ground, allow the machine to stay in this position for two minutes and check fittings around valve blocks and rams for leaks.
8. Retract the front two jacking legs and repeat step 6 for the back two jacking legs. Retract the back two jacking legs when the checks are complete.

9. Extend each of the jacking legs one inch at a time until the jacking legs are fully extended. Keep the machine as level as possible at all times when raising and pin in place, Reference: Figure 5.46.

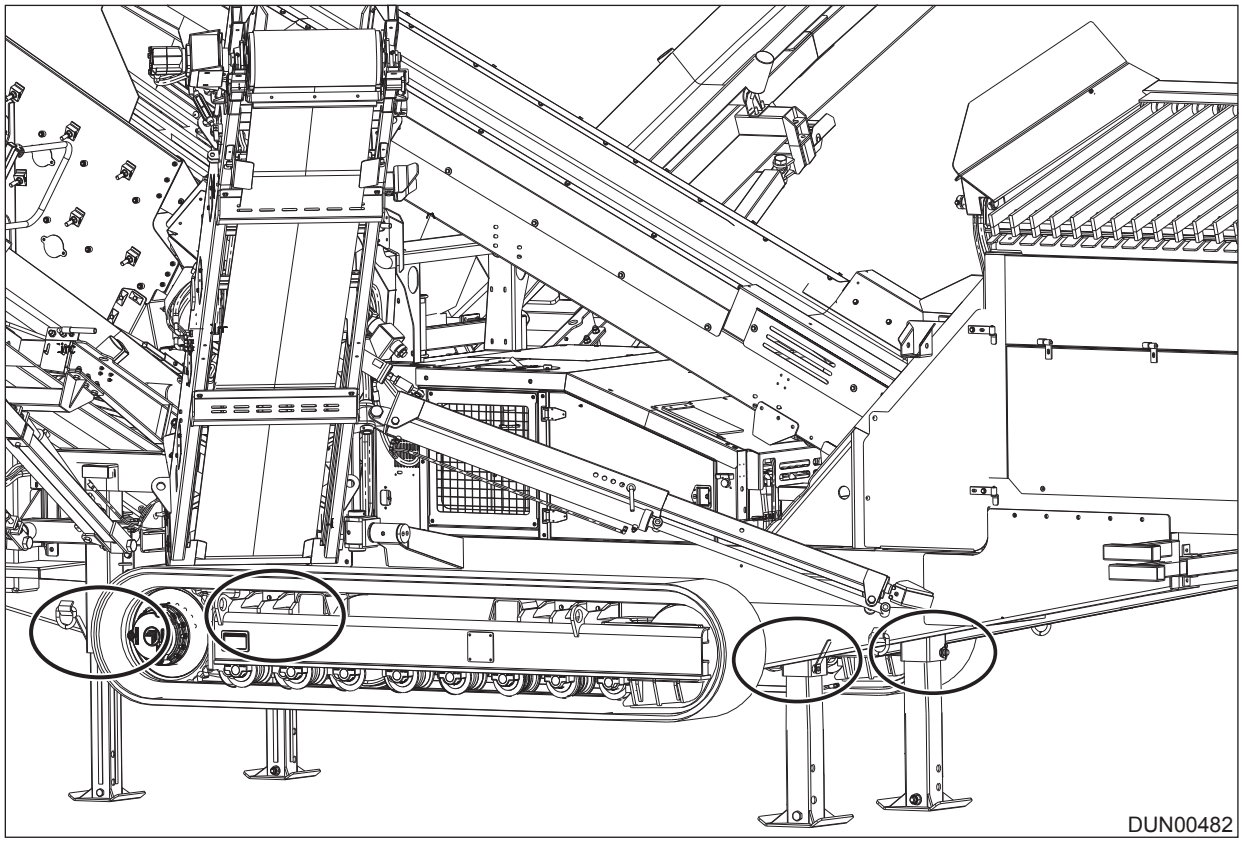

Figure 5.46 - Machine Jacked Up and Pinned in Place

10. Using the tow frame (Item 1) guide the roll in bogie into position.

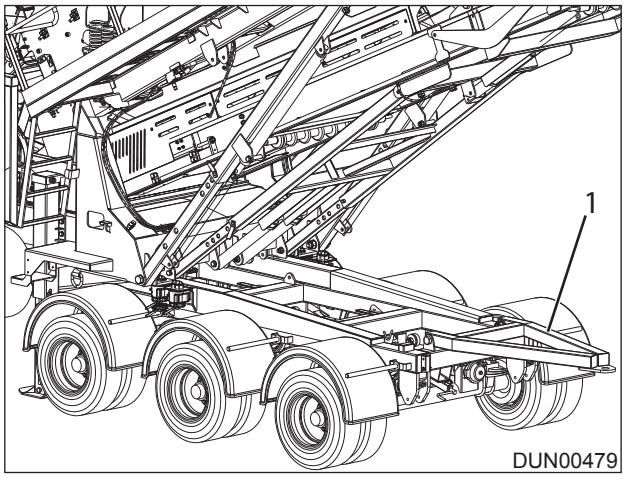

Figure 5.47 - Roll in bogie in position

11. Guide the bogie frame into the chassis assembly.

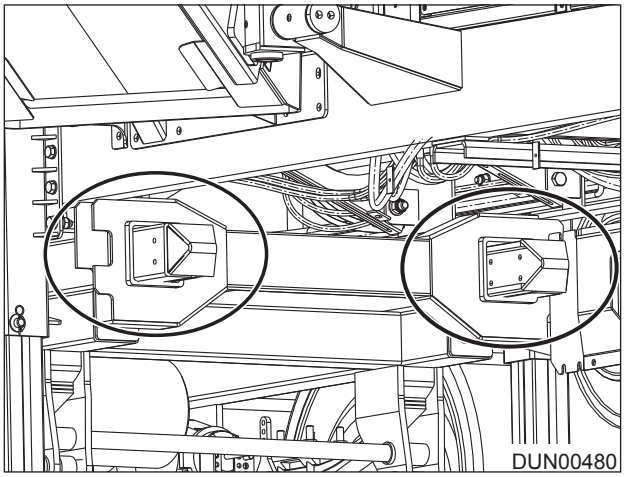

Figure 5.48 - Bogie frame in position

12. Lock the bogie in position using the screwdown twistlocks.

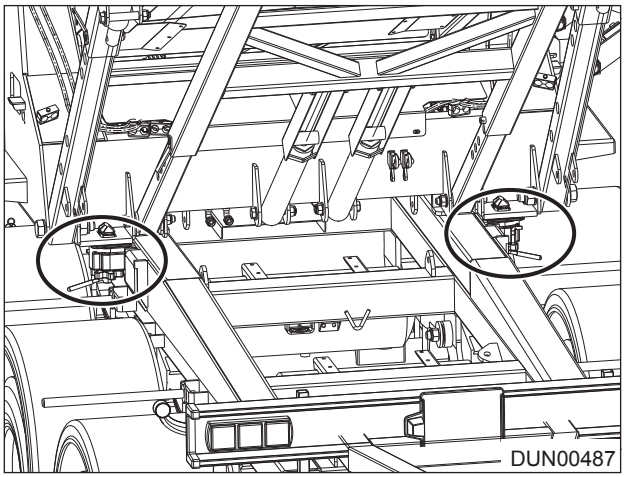

Figure 5.49 - Twistlocks on roll in bogie

13. Fold down the towing frame and attach the lighting board to the back on the bogie.
14. Connect the relevant hoses from the bogie to the machine.
15. Attach the lorry to the fifth wheel plate and connect relevant hoses.
16. Retract the jacking legs fully and pin in place.

(2) Removing the Roll In Bogie (Option)

⚠ WARNING

Wear personal protective equipment.

Ensure all personnel are clear from the machine.

Attaching and removing the roll in bogie must be undertaken on flat, level ground that is capable of supporting the machines weight.

NOTICE

The procedure of removing the roll in bogie should be supervised and undertaken by a minimum of two persons.

PROCEDURE

1. Observe all safety warnings.
2. Start the machine.
3. Remove the pins from the jacking legs in the positions, Reference: Figure 5.50.

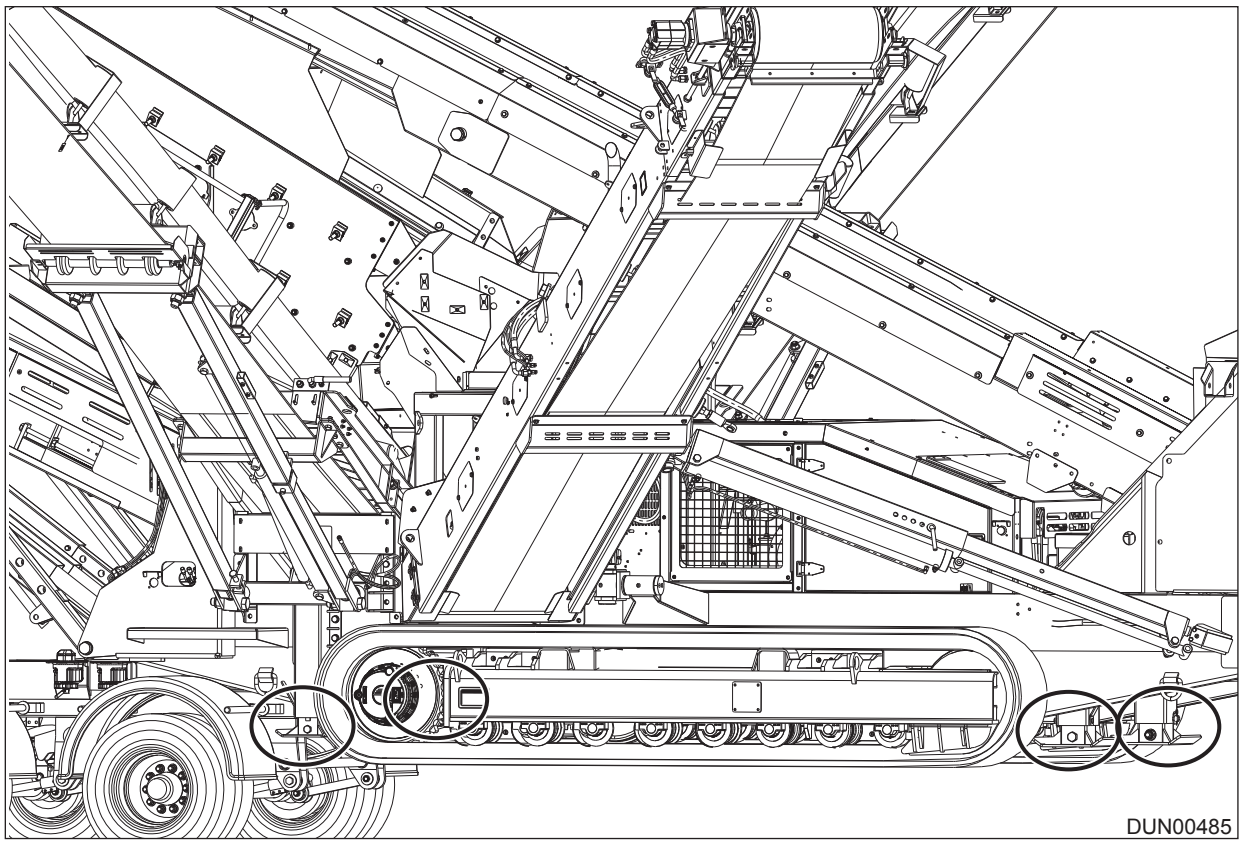

Figure 5.50 - Machine jacking legs

4. Extend the jacking legs using the control levers.

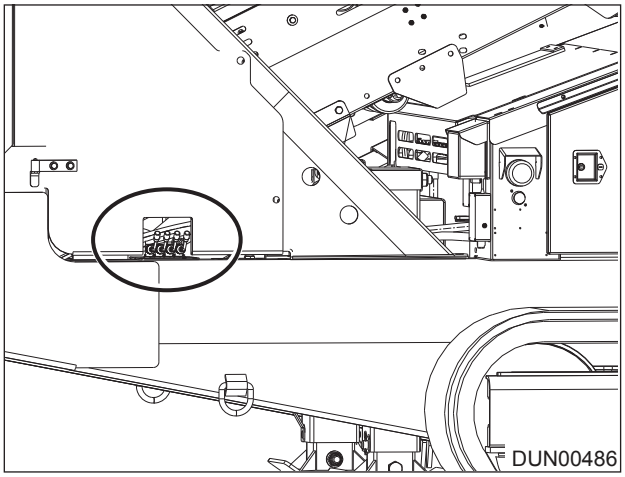

Figure 5.51 - Jacking leg control levers.

5. Check fittings around valve blocks and rams for leaks. Pin in the positions, Reference: Figure 5.52.

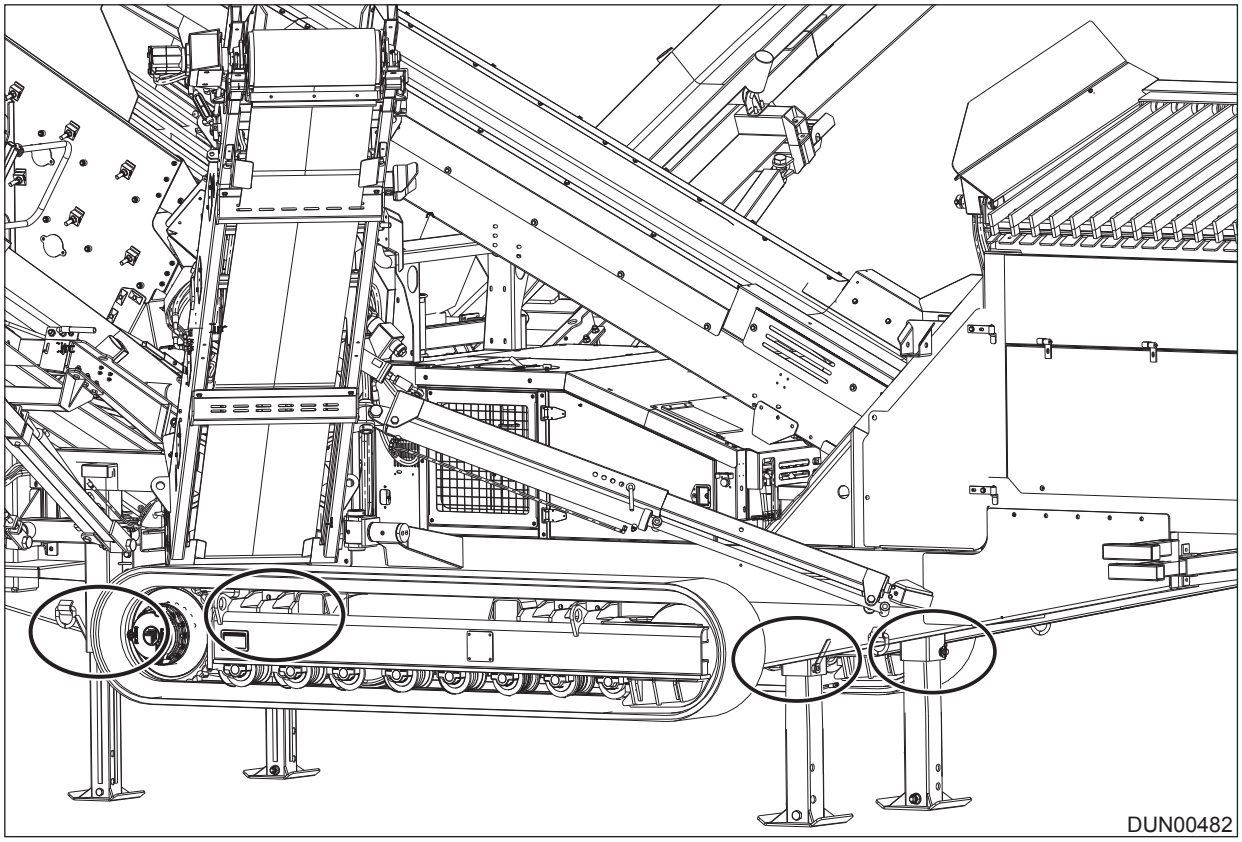

Figure 5.52 - Jacking legs extended

6. The fifth wheel plate should now be clear of the lorry. Remove the relevant hoses and move the lorry clear of the machine.
7. Remove the relevant hoses connecting the bogie to the machine.

8. Remove the lighting board from the back of the bogie and fold out the towing frame (Item 1).

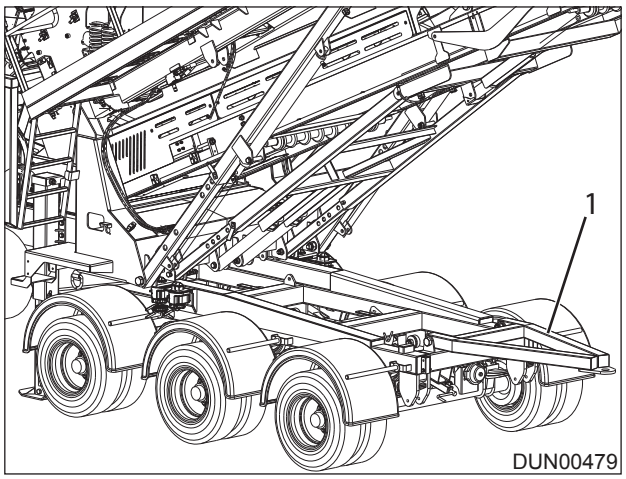

Figure 5.53 - Towing frame folded out.

9. Using the screwdown twistlocks to unlock the bogie.

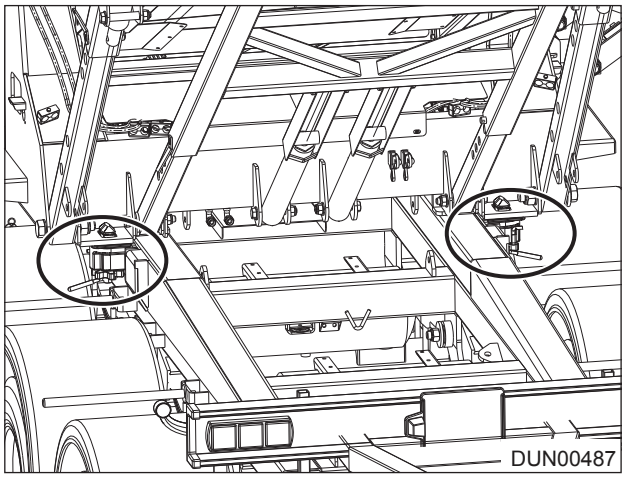

Figure 5.54 - Twistlocks on roll in bogie

10. Tow the bogie clear from the machine.
11. Remove the pins from the jacking legs.

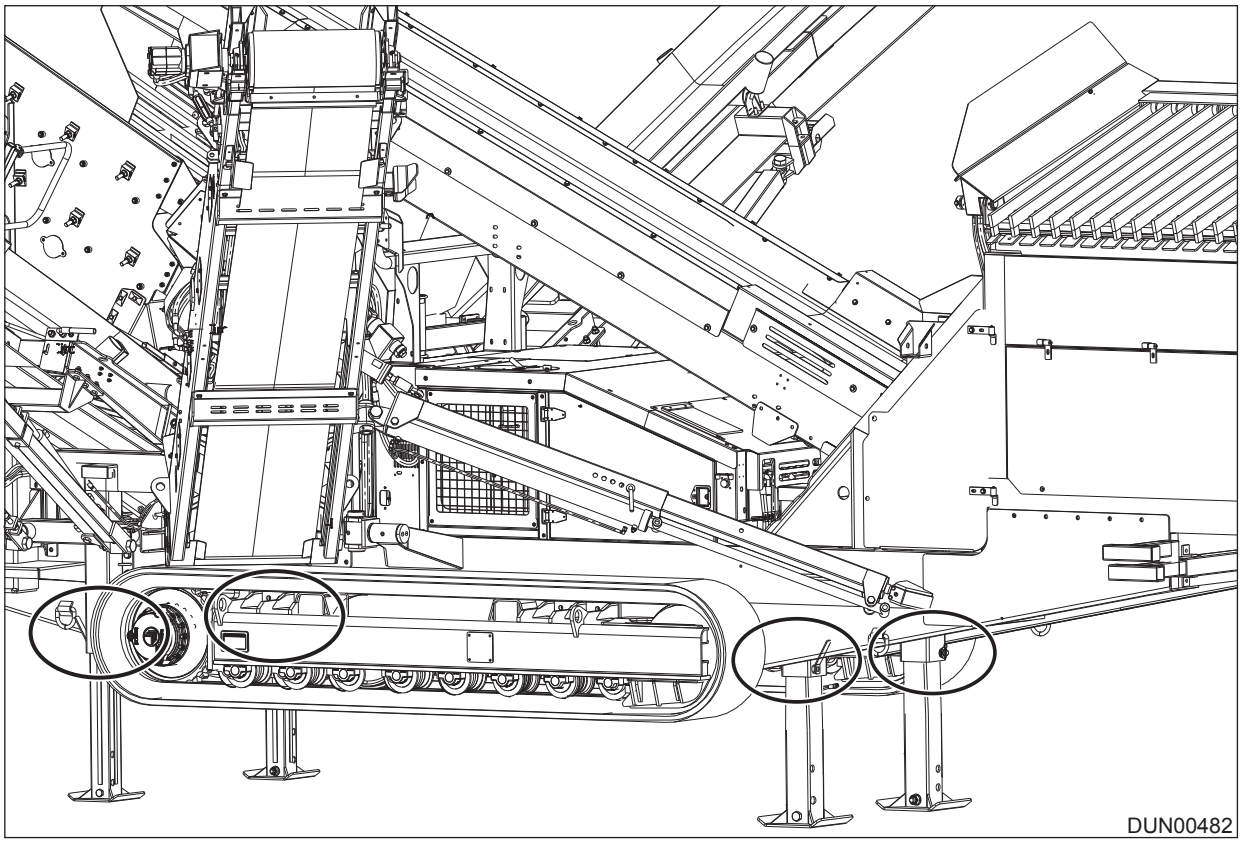

Figure 5.55 - Jacking legs extended

12. Lower the machine back to ground level, inch at a time until the jacking legs are fully retracted. Keep the machine as level as possible at all times when lowering. Insert the pins to secure the legs in place again.
13. Remove the fifth wheel plate and stow away for future use.

Table of Content

6 Initial Setup and Adjustments 6-2

6.1 Initial Inspection.....6-2
6.2 Machine Location Considerations 6-3
6.3 Measures Before Set Up 6-3
6.4 Measures After Long Term Standstill.....6-3
6.5 Putting the Machine into the Working Position.....6-4
(1) Raising the Feeder into the Working Position (Wheel Machine) 6-5
(2) Lowering the Rear Support Legs (Track Machine).....6-7
(3) Opening Out the Side Conveyors.....6-8
(4) Opening Out the Auxiliary Conveyor 6-10
(a) Extended Auxiliary Conveyor Mounting Instructions (Option).....6-14
(5) Attaching the Side Conveyor Paddles 6-19
(6) Lowering the Tail Conveyor (Head Section) 6-20
(7) Raising the Screenbox into Working Position.....6-21
(8) Raising the Tail Conveyor into Working Position 6-22
(9) Positioning the Main Conveyor.....6-23
(10) Adjusting the Spreader Plate.....6-23
(11) Removing Screen Anti-Rock Stays.....6-24
(12) Maintenance platform Setup Instructions 6-25

6 Initial Setup and Adjustments

NOTICE

When the machine is delivered, thoroughly check for any damage that has occurred during transport. Do not set up the unit until the inspection is complete. Complete any delivery and startup forms that were supplied with the equipment. Take note of any damage found, and photos if possible, and have the driver initial your description of any problems.

Ensure all items shipped are present by checking all loose parts, small-parts boxes, and tools against the packing list. Check in and around the machine for any loose items that have been shipped inside the machine.

Terex recommends that the assembly and installation work of the machine is carried out by the Terex customer service department. The manufacturer/supplier is not liable for damage caused by improper assembly or installation.

The environment in which the machine operates contains inherent health and safety risks, which the operator must take steps to avoid.

Dangers from overhead conveyor discharges, overspill material, vehicle movements, and other site-related hazards must be anticipated.

Avoid these risks by carrying out risk assessments before the machine is put into operation. Ensure that appropriate exclusion zone measures are put in place and site personnel safety awareness training has been undertaken.

6.1 Initial Inspection

When the machine is delivered, thoroughly check for any damage that might have occurred during transport. Do not set up the unit until the inspection is complete. Complete any delivery and start-up forms that were supplied with the equipment. Take note of any damage found, and photos if possible, and have the driver initial your description of any problem(s).

Check all loose parts, small-parts boxes, and tools against the packing list to ensure all items shipped are present. Check in and around the machine for any items that may have been shipped inside the machine

6.2 Machine Location Considerations

Prior to setting up the machine, consideration should be given to a suitable layout to prevent oversize material or metal from entering the machine. In order to prevent damage of the screen unit no material above the size recommended should be fed into the machine.

Position the machine in a safe, level, operating position making sure both tracks are in full contact with the ground to minimise movement of the machine. Regularly check the machine is level and stable.

Pay attention to access from the loading area and to where material is to be deposited.

Ensure the area under the tail drum of the conveyor is free of large stones etc. which may cause damage to the belt.

For dusty conditions some account should be taken of the prevailing wind direction to minimize the possibility of dust entering the air intake.

When setting up the machine, ensure that enough space is available around the machine to enable easy set up, servicing and repair work.

Machinery arranged before and after this machine will have to be placed on the site accordingly.

6.3 Measures Before Set Up

We recommend that the assembly/ installation work of the machine be carried out by the Terex customer service department. The manufacturer/supplier will not be liable for damage caused by improper assembly/ installation.

PROCEDURE

1. Ensure all guards are fully secured in correct/closed position.
2. Remove all loose items from the machine by untying the securing ropes.
3. Put control valve levers in neutral (non-operational) position.
4. The machine must be placed on solid ground capable of carrying the machine‘s weight.
5. Before detaching the machine from the prime mover, it is important that the chosen site is level. Level the work site foundation.
6. Level the machine with a precision spirit level.
7. Do not position the machine above ground level, e.g. on blocks etc.

6.4 Measures After Long Term Standstill

NOTICE

Before putting the machine into operation, perform the daily (or 10 hour) maintenance schedule.

For track machines, check tracks before transporting or moving the machine.

6.5 Putting the Machine into the Working Position

Refer to Chapter 4 for descriptions of operational decals.

⚠ WARNING

Nip Point Hazard

Nip points exist where rams and moving assemblies exist. Stay clear of all moving sub assemblies on the machine.

Entanglement hazard. Ensure all personnel are clear from the machine.

Wear Personal Protective Equipment.

⚠ CAUTION

Ensure that all safety signs are present.

Fall hazard.

Falling material hazard.

Crush hazard.

NOTICE

Before folding out conveyors, ensure that there is adequate space for the conveyors to fold out and for material stockpiles. The machine must be unfolded and setup in the correct sequence to prevent damage.

Do not raise or lower any part of the machine with securing pins in position. Ensure that all pins are removed before starting the machine and raising or lowing machine components.

Use the control levers in a smooth and controlled manner. Do not rush or jerk the controls.

It is mandatory to have a Banksman present for any activities where an operators view is obstructed.

(1) Raising the Feeder into the Working Position (Wheel Machine)

⚠ CAUTION

Crush hazard from lowering jacking legs. Stand clear of support legs when withdrawing the main support pins. The inner telescopic member of the jacking leg is heavy and may cause serious injury if allowed to fall after pin withdrawal. Ensure all personnel are clear from the machine.

Wear personal protective equipment.

NOTICE

All control levers must be in the neutral (non-operational) position. Before starting the engine the anti rock-stays must be removed.

Slightly activate the jack leg lever to release the tension from the retaining pins, allowing for easy removal of the pins.

PROCEDURE

1. Observe all safety warnings.
2. Start the machine.
3. Remove the pins and spring pins and manually lower support legs from towing position to ground level. Lower one support leg at a time.

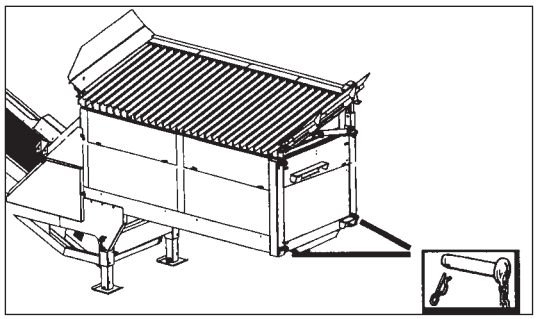

Figure 6.1 - Jacking Leg Pins

4. Remove the pins and spring pins from the hydraulic jacking legs.

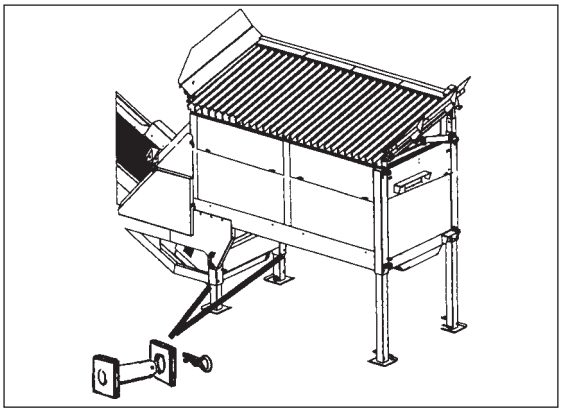

Figure 6.2 - Hydraulic Jacking Leg Pins

5. Move up the jacking leg control lever to extend the jacking legs and raise the feeder.
6. Move down the jacking leg control lever to retract the jacking legs and lower the feeder.

7. When the feeder is at it‘s correct height adjust slightly to align the holes in the two support legs and two jacking legs.
8. Re-insert pins and spring pins into all jacking legs.

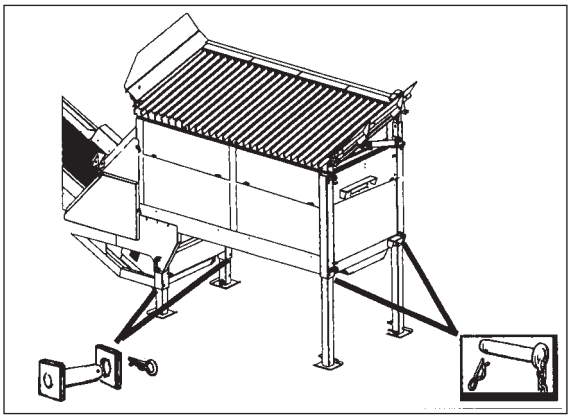

Figure 6.3 - Jacking Leg Pins

9. Bolt the hopper support legs, cross-tie into position.

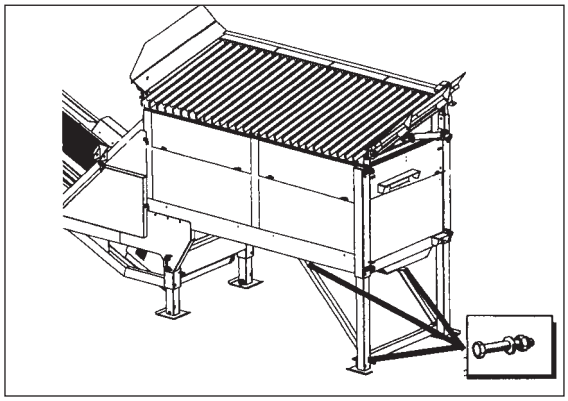

Figure 6.4 - Feed Hopper Support Legs Cross-tie

10. Slightly move down the feeder control lever to retract the jacking legs. The weight of the feeder end of the machine is now supported by the support leg pins.
11. Move feeder control lever into neutral position.

(2) Lowering the Rear Support Legs (Track Machine)

⚠ CAUTION

Crush hazard from lowering jacking legs. Stand clear of support legs when withdrawing the main support pins. The inner telescopic member of the jacking leg is heavy and may cause serious injury if allowed to fall after pin withdrawal. Ensure all personnel are clear from the machine.

Wear personal protective equipment.

PROCEDURE

1. Observe all safety warnings.
2. Start the machine.
3. Remove pins and spring pins from the support legs.
4. Move the jacking leg lever down, to lower the jacking legs, (track machine only).
5. Reinsert the pins and spring pins into the support legs.

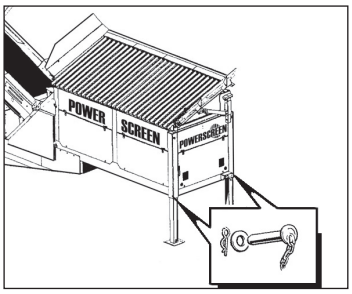

Figure 6.5 - Rear Support Leg Pins

(3) Opening Out the Side Conveyors

⚠ WARNING

Ensure all personnel are clear from the machine. Wear personal protective equipment.

NOTICE

Take care not to nip the conveyor belt between moving parts.

PROCEDURE

1. Observe all safety warnings.
2. Remove the transport pins 1 off LHS/RHS from each of the side conveyors.

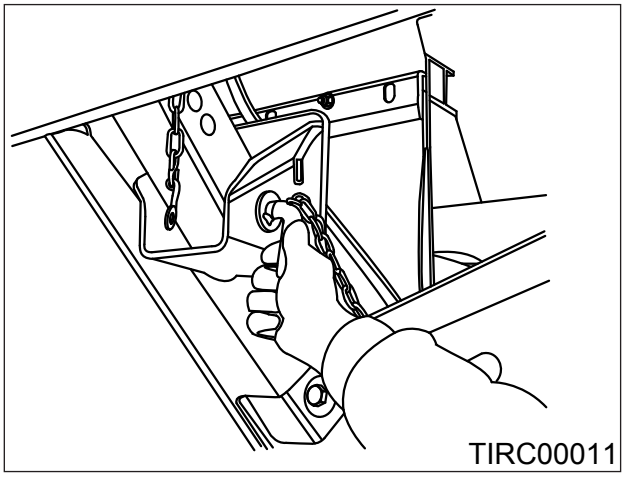

Figure 6.6 - Side Conveyor Pins

3. Remove all tying from each of the side conveyors.
4. Start the machine.
5. Move up left hand side conveyor lever to open out the left hand side conveyor, fully into working position.

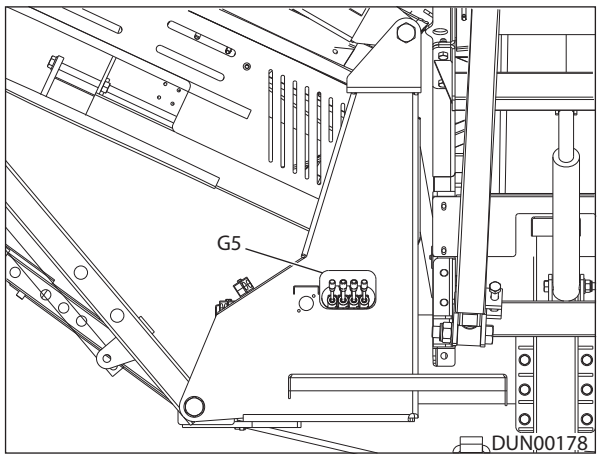

Figure 6.7 - Left Hand Side Control Bank

6. Move up right hand side conveyor lever to open out the right hand side conveyor, fully into working position.

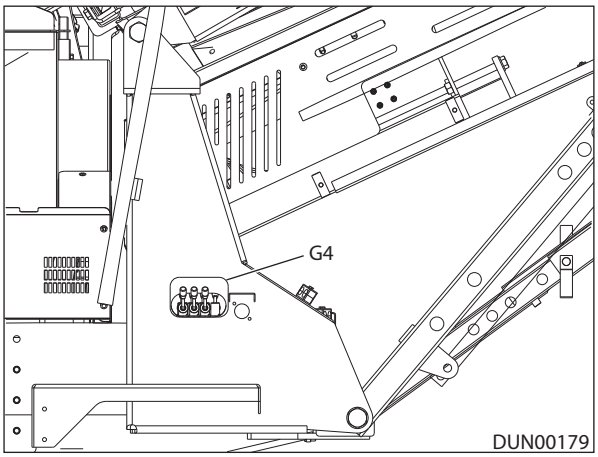

Figure 6.8 - Right Hand Side Control Bank

7. Slide the box section (Item 1) up to the top hole and reinsert the pin, spring pin and washer (Item 2) 1 off LHS/RHS.

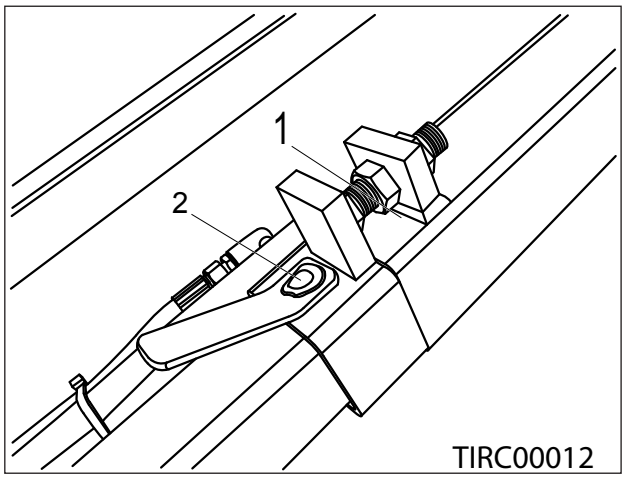

Figure 6.9 - Side Conveyor Box Section and Pins

(4) Opening Out the Auxiliary Conveyor

⚠ WARNING

Ensure all personnel are clear from the machine. Wear personal protective equipment.

NOTICE

Take care not to rotate the conveyor too much or it will hit the support post causing possible machine damage.

PROCEDURE

1. Observe all safety warnings
2. Remove the transport stay (Item 1) from the auxiliary conveyor, Reference: Figure 6.10.

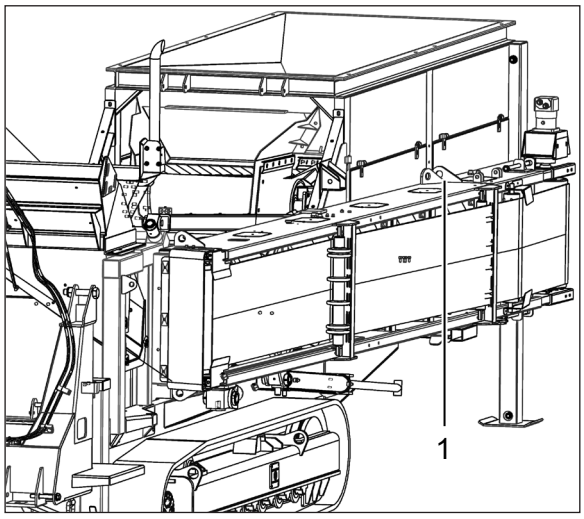

Figure 6.10 - Auxiliary Conveyor Transport Stays

3. Start the machine.
4. Activate the auxiliary conveyor (upper ram) lever into raised position.

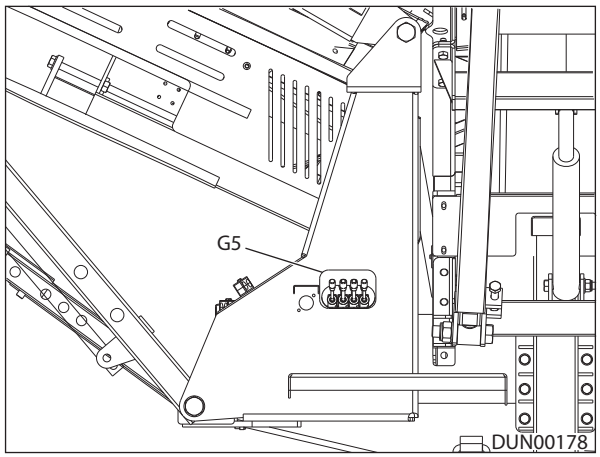

Figure 6.11 - Left Hand Side Control Bank

5. Rotate the conveyor until rotated into the position shown in Figure 6.12. Stop when the conveyor starts to lift away from the lower transport bracket (Item 1).

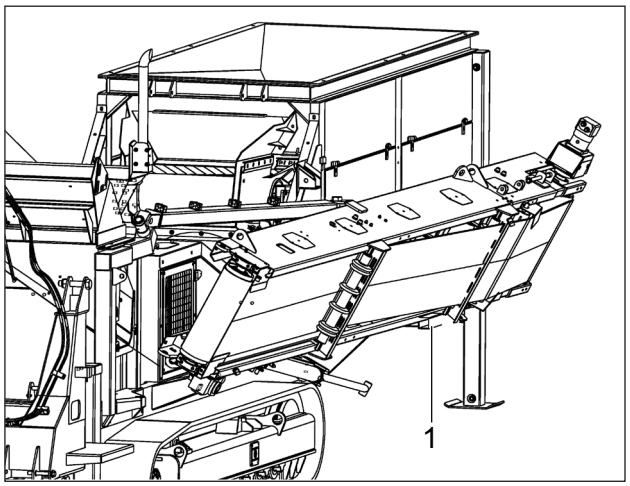

Figure 6.12 - Auxiliary Conveyor Upper Side Rotated Out

6. Fold out the conveyor to approximately 30 degrees by activating the auxiliary conveyor (lower ram) lever into the raised position. Stop when the conveyor reaches the position shown in Figure 6.13. Do not rotate conveyor too much or it will hit the support post cause machine damage, Reference: Figure 6.14.

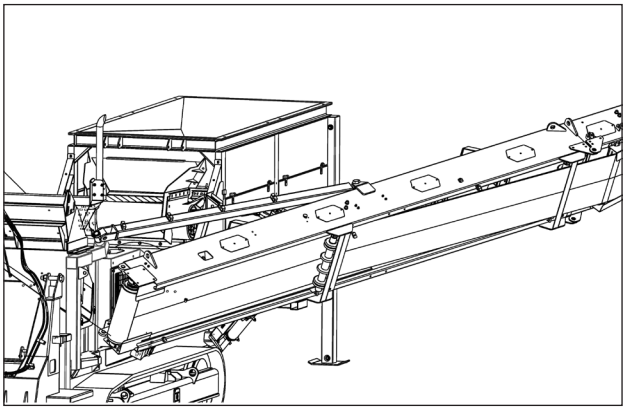

Figure 6.13 - Auxiliary Conveyor Folded out to Approximately 30 Degrees

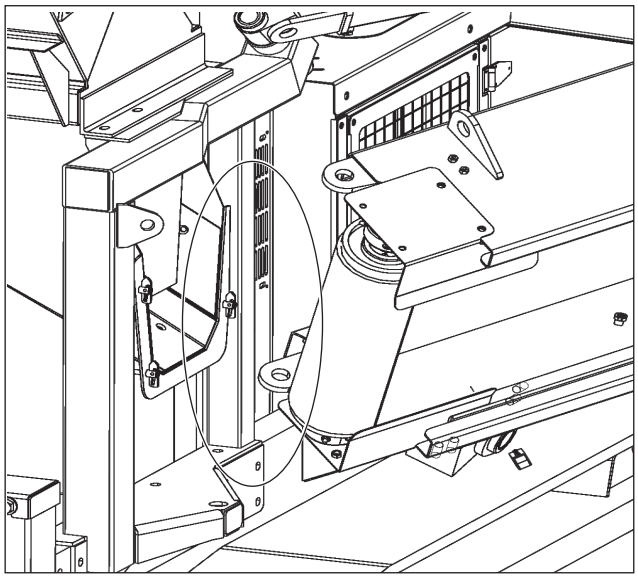

Figure 6.14 - Rotating Auxiliary Conveyor Close to Support Post

7. Rotate the conveyor to the position shown in Figure 6.15 by activating the auxiliary conveyor (upper ram) lever into the raised position.

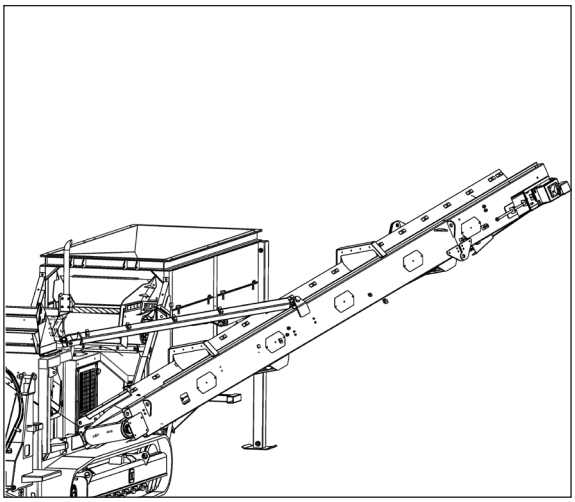

Figure 6.15 - Auxiliary Conveyor Rotated

8. Rotate the conveyor into working position by activating the auxiliary conveyor (lower ram) into the raised position, Reference: Figure 6.16.

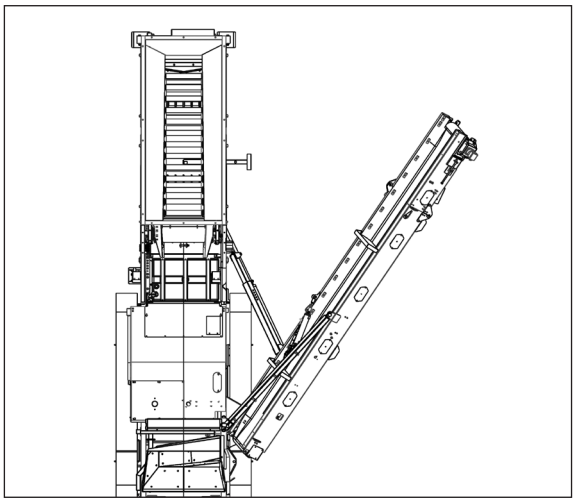

Figure 6.16 - Auxiliary Conveyor Working Position

9. When the auxiliary conveyor is in the required position fit the safety pin to the telescopic support leg, Reference: Figure 6.17.

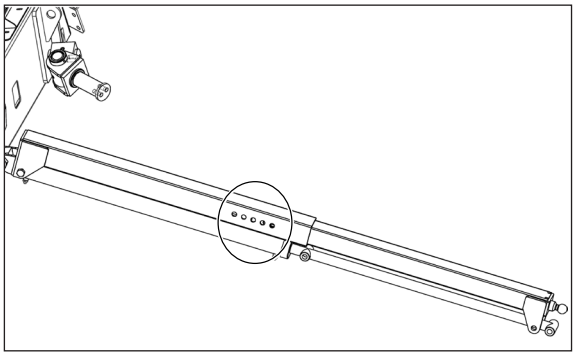

Figure 6.17 - Auxiliary Conveyor Safety Pin

10. Fit the support chain to the auxiliary conveyor, Reference: Figure 6.18.

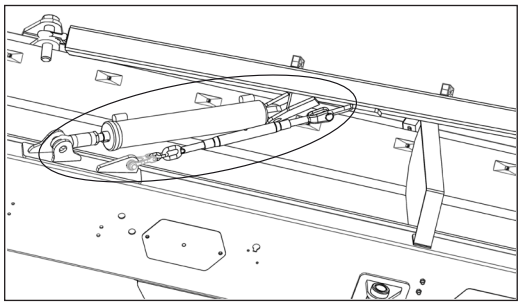

Figure 6.18 - Auxiliary Conveyor Support Chain

(a) Extended Auxiliary Conveyor Mounting Instructions (Option)

⚠ DANGER

Fall Hazard. Do not climb onto working or moving machinery. Use suitable lifting equipment when working at a height. Only use lifting equipment capable of lifting 2,500 kg. NEVER work under suspended loads.

⚠ WARNING

Hazardous nip and crush points. Keep clear of folding equipment. Wear personal protective equipment. Switch off, tag out and lock out before working at the machine.

Ensure all nuts, bolts and wedges are inserted correctly before using the maintenance platform.

NOTICE

Machine must be on level ground prior mounting. All control levers must be in the neutral (non-operational) position.

PROCEDURE

1. Observe all safety warnings.
2. Using suitable lifting equipment support the weight of the conveyor using the lifting points (Item 1).

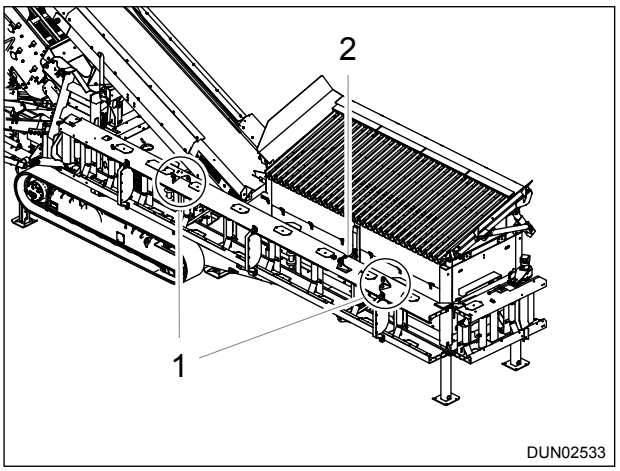

Figure 6.19 - Lifting Points

3. Remove the transport bracket (Item 3) at the rear of the machine, Reference: Figure 6.20.

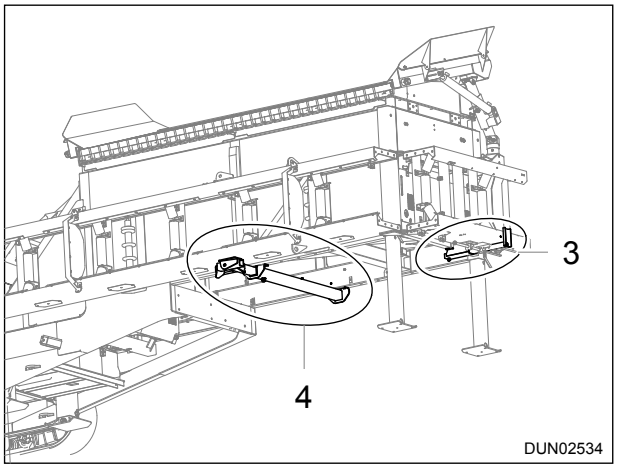

Figure 6.20 - Transport Brackets

4. Unfold the head section (Item 1) of the conveyor into the working position and secure, Reference: Figure 6.21.

   » *The transport bracket (Item 3) can now be secured in the working position, under the feeder.*

5. Fit the skirting on the conveyor.

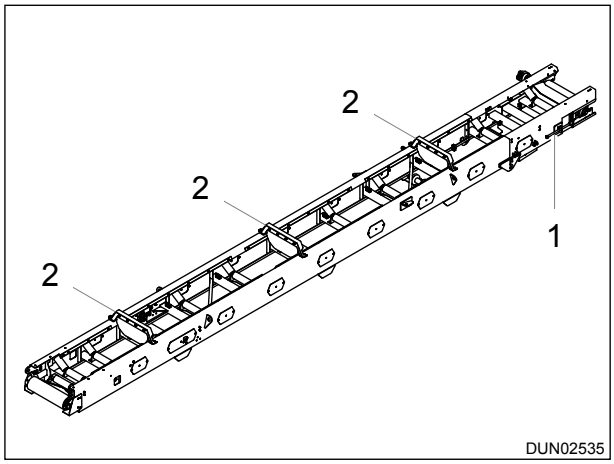

Figure 6.21 - Conveyor Guards

6. Remove transport tie (Item 2).
7. Using suitable lifting equipment, lift the conveyor vertically clear of machine, and rest conveyor on its side, on level ground.

   » *To prevent damaging conveyor, place wooden blocks under the frame.*

8. Secure the transport bracket (Item 4) in the working position, under the feeder.
9. With lifting chains still located in brackets supporting the weight of the conveyor, rest the conveyor flat on its underside.

   » *To prevent damaging conveyor, place wooden blocks under the frame during this operation.*

10. Fit the conveyor anti-rollbacks (Item 2) and conveyor guards, Reference: Figure 6.21.
11. Secure the pivot beam (Item 1) to the machine.

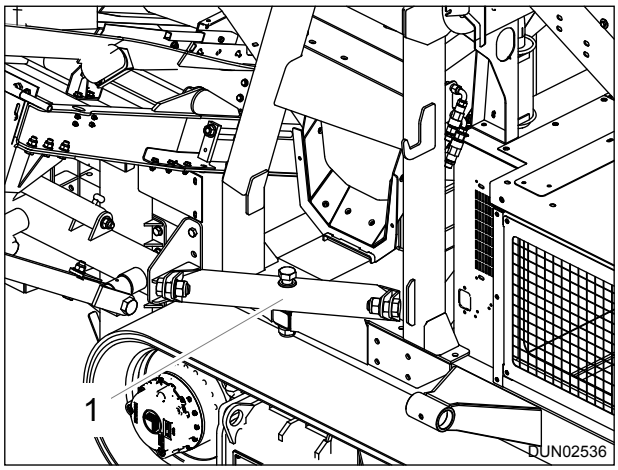

Figure 6.22 - Pivot Beam

12. With the conveyor resting on level ground, use two of the supplied D-shackles (Item 2) to fix each wire rope (Item 3) to the conveyor hanging brackets (Item 1), Reference: Figure 6.23.

    » The wire ropes must be attached to the machine before the conveyor can be lifted into position.

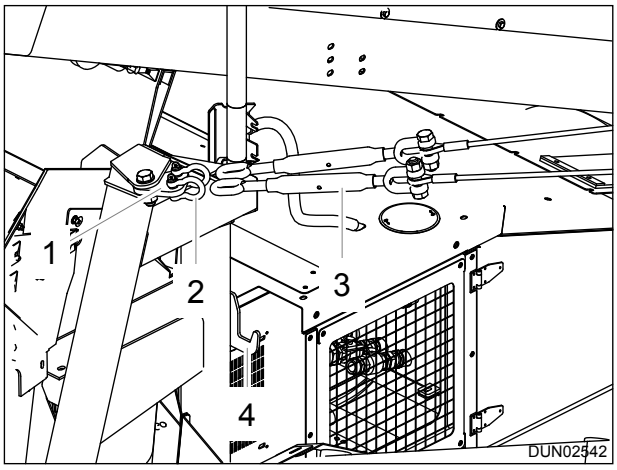

Figure 6.23 - D-Shackles, Wire Rope and Conveyor Hanging Brackets

13. Relocate lifting chains to the four lifting eyes on the conveyor and sling to 22 degrees. Lift conveyor towards pivot beam on machine.

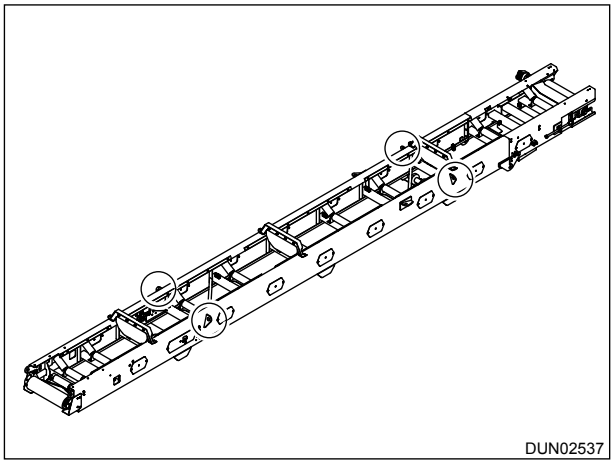

Figure 6.24 - Conveyor Lifting Points

14. Line up holes on pivot beam (Item 1) with holes on the conveyor (Item 2). Fix and secure with bolts.

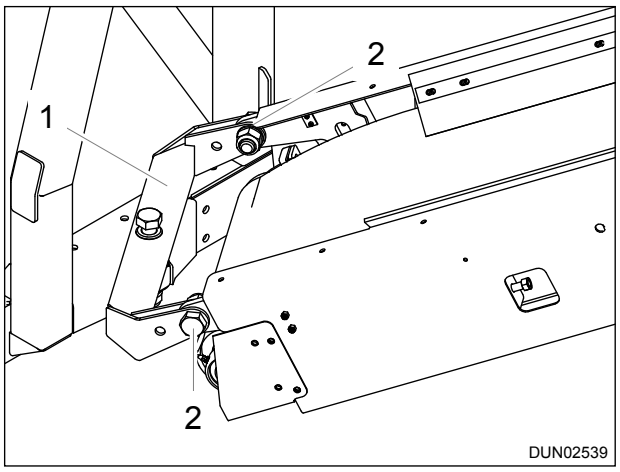

Figure 6.25 - Pivot Beam Lined up with Holes in Conveyor

15. While still supporting the weight of the conveyor, attach the wire ropes (Item 1) to the conveyor at position 2, Reference: Figure 6.26.

    » *The wire rope must be secured to the machine at position 3 before the conveyor is lifted into position.*

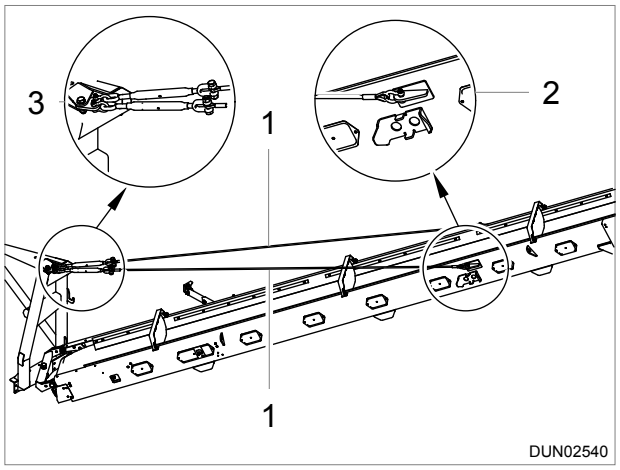

Figure 6.26 - Attaching the Wire Ropes

16. Attach the radial stays joints to the conveyor (Item 1) and to the chassis of the machine (Item 2), Reference: Figure 6.27.
17. Attach the upper and lower telescopic stays (Item 3) and secure in working position with bolts.

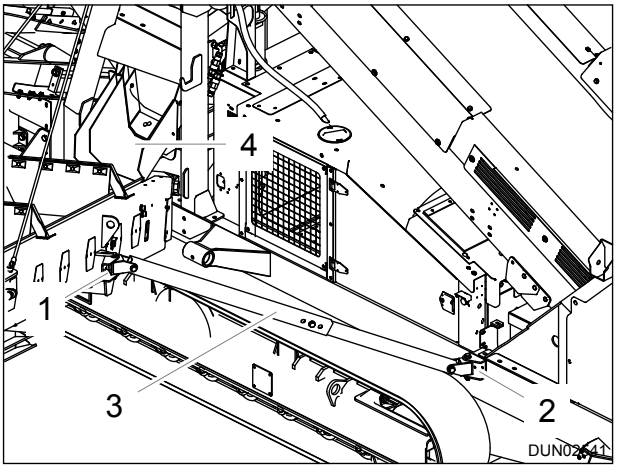

Figure 6.27 - Auxiliary Conveyor in Working Position

18. Fit the conveyor feed boot to the conveyor.
19. Fix the chute extension (Item 4) to top deck chute with bolts.
20. Bolt auxiliary conveyor feed boot rubber to pivot beam using three rubber clamp plates and locking nuts.
21. Pipe drive and return hoses using supplied quick releases.

(5) Attaching the Side Conveyor Paddles

⚠ WARNING

Entanglement Hazard.

Wear personal protective equipment.

PROCEDURE

1. Observe all safety warnings.
2. Retrieve the paddles (Item 2) 2 off LHS/RHS.
3. Attach the paddles to the side conveyors, 2 off LHS/RHS.
4. Tighten into place using the supplied bolts and clamp (Item 1).

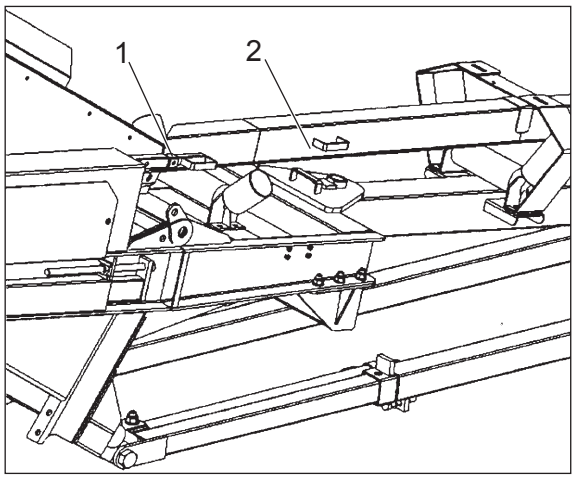

Figure 6.28 - Side Conveyor Paddles

(6) Lowering the Tail Conveyor (Head Section)

⚠ WARNING

Wear personal protective equipment.

NOTICE

Take care not to nip the conveyor belt between moving parts.

PROCEDURE

1. Observe all safety warnings.
2. Remove transport stays from the tail conveyor (Item 1).

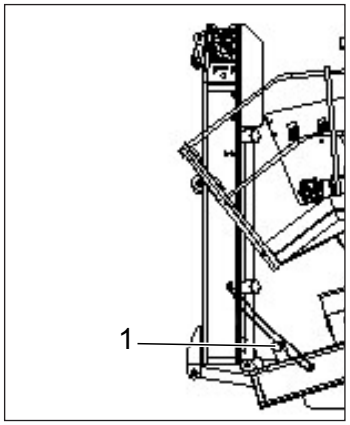

Figure 6.29 - Tail Conveyor Transport Stays

3. Move down the tail conveyor lever to lower the tail conveyor head section.
4. Position tail conveyor head section as shown.

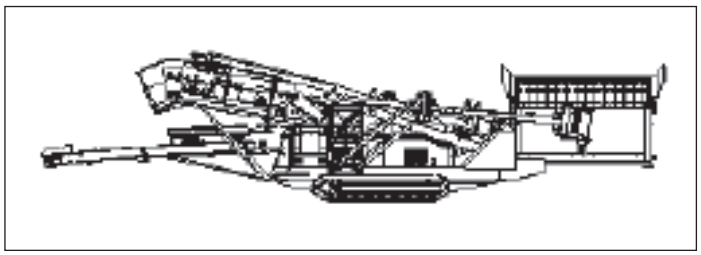

Figure 6.30 - Tail Conveyor Head Section Lowered

(7) Raising the Screenbox into Working Position

⚠ WARNING

Wear personal protective equipment.

Crushing hazard.

NOTICE

Use the control levers in as smooth and controlled manner. Do not rush or jerk the controls. This will damage the machine.

Make sure the fines conveyor is unfolded before the screenbox is raised into working position.

PROCEDURE

1. Observe all safety warnings.
2. Remove pins and spring pins (1 off LHS/RHS) from the screen box support legs.

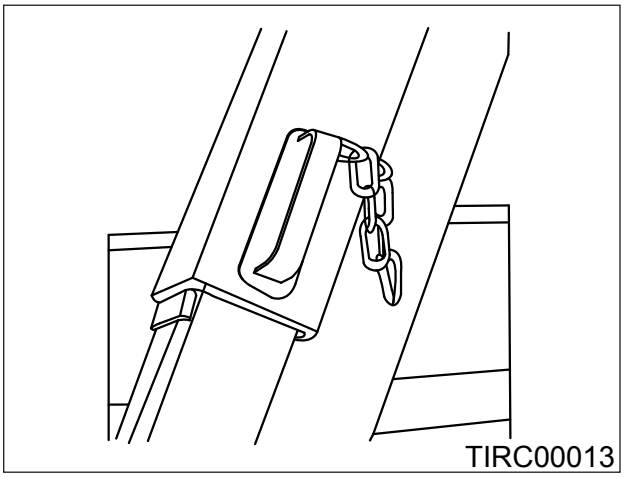

Figure 6.31 - Screenbox Support Leg Pins

3. Move screenbox lever to raise the screen box to the required working position.

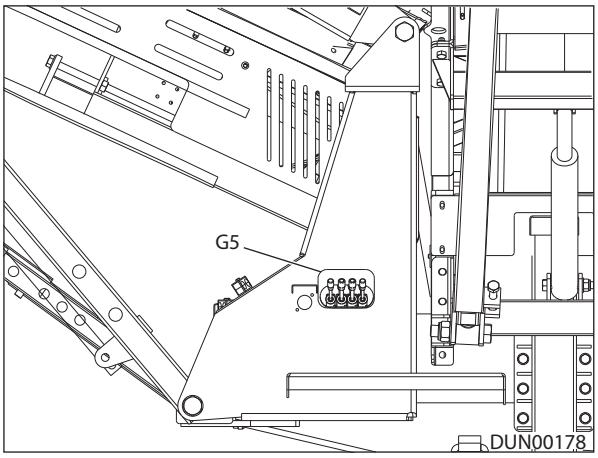

Figure 6.32 - Left Hand Side Control Bank

4. Reinsert the screen box support leg pins and spring pins (1 off LHS/RHS).

(8) Raising the Tail Conveyor into Working Position

⚠ WARNING

Wear personal protective equipment.

NOTICE

Take care not to nip the conveyor belt between moving parts.

PROCEDURE

1. Observe all safety warnings.
2. Remove retaining pin from the tail conveyor struts.

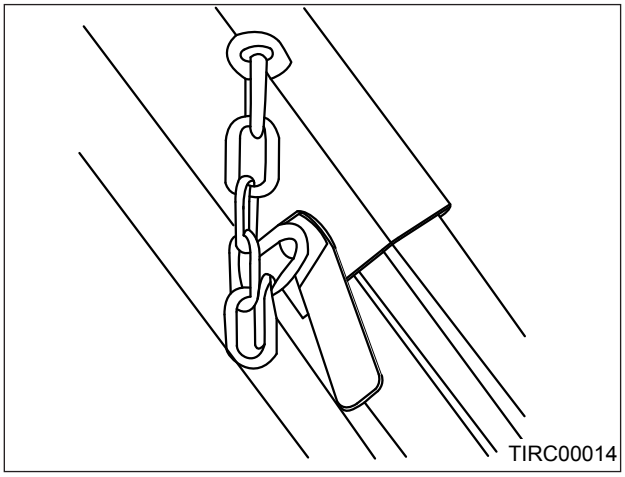

Figure 6.33 - Tail Conveyor Pin

3. Move up the tail conveyor lever to raise the tail conveyor.

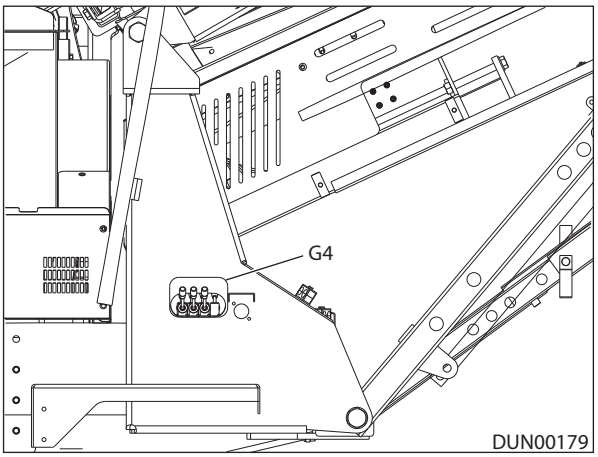

Figure 6.34 - Tail Conveyor Control Lever

4. Place retaining pin into the tail conveyor struts.

(9) Positioning the Main Conveyor

⚠ WARNING

Wear personal protective equipment.

NOTICE

Position the main conveyor so the screening material will deflect off the deflector plate and use the full screening area of the screenbox.

PROCEDURE

1. Observe all safety warnings.
2. Raise the lever in the auxiliary control bank to extend the main conveyor.
3. Lower the lever in the auxiliary control bank to retract the main conveyor.

(10) Adjusting the Spreader Plate

⚠ WARNING

Wear personal protective equipment.

NOTICE

All control levers must be in the neutral (non-operational) position.

PROCEDURE

1. Observe all safety warnings.
2. Remove bolt (Item 1) 1 off LHS/RHS.
3. Adjust the spreader plate, forward or back, one hole (Item 2) at a time, LHS/RHS.
4. Replace and tighten bolt (Item 1) 1 off LH/RH.

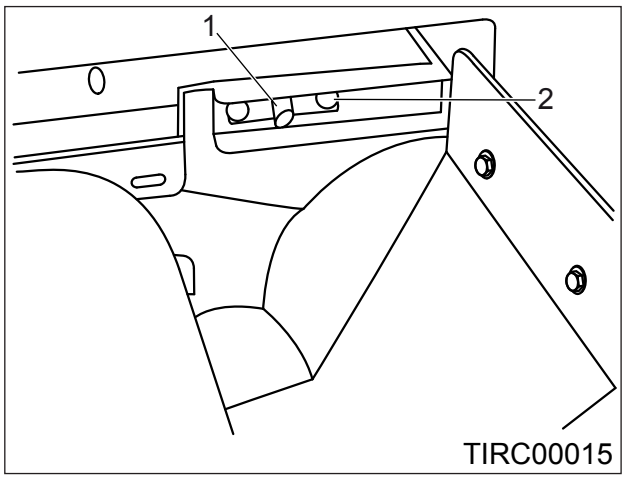

Figure 6.35 - Spreader Plate Adjustment

(11) Removing Screen Anti-Rock Stays

⚠ WARNING

Wear personal protective equipment.

Fall hazard.

Switch off, tag out and lock out before working at the machine.

PROCEDURE

1. Observe all safety warnings.
2. Remove bolts and anti-rock stays (Item 8) 1 off RHS and 1 off LHS.

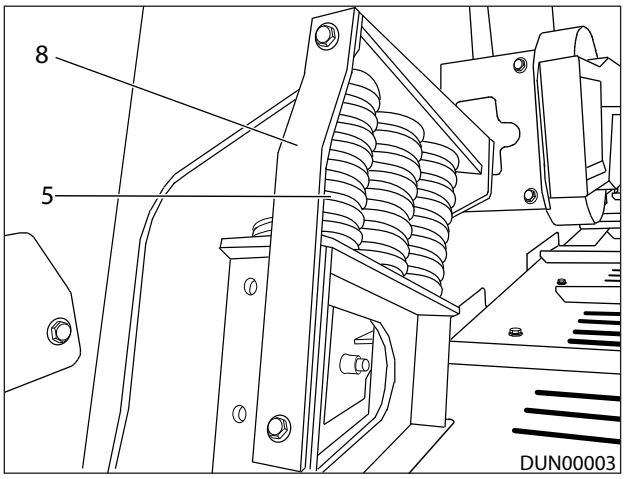

Figure 6.36 - Screen Anti-rock Stays

3. Place the bolts and anti-rock stays in the toolbox, to have them available for re-use when the machine is towed on the highway.

(12) Maintenance platform Setup Instructions

⚠ DANGER

Fall Hazard. Do not climb onto working or moving machinery. Use suitable lifting equipment when working at a height.

⚠ WARNING

Hazardous nip and crush points. Keep clear of folding equipment. Wear personal protective equipment. Switch off, tag out and lock out before working at the machine.

Ensure all nuts, bolts and wedges are inserted correctly before using the maintenance platform.

NOTICE

Machine must be on level ground prior mounting. All control levers must be in the neutral (non-operational) position.

PROCEDURE

1. Observe all safety warnings.
2. Unbolt the four retaining bolts (Item 2) from each corner of the screenbox.
3. While standing on the step at the end of the main chassis, pull each side of the maintenance platform out to full extension. Replace the retaining bolts (Item 2).

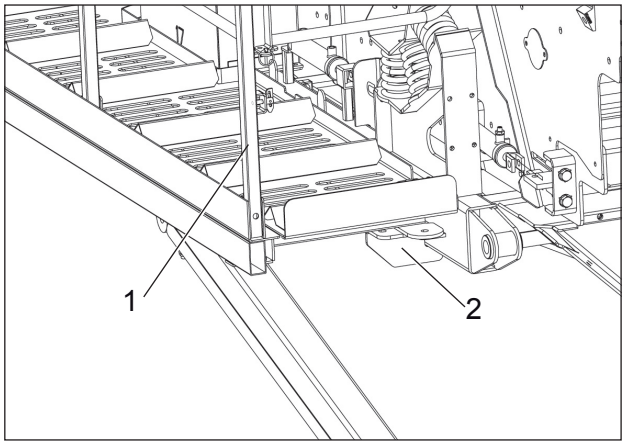

Figure 6.37 - Maintenance platform Retaining Bolts

4. Release quick release hitch (Item 1) and fold down maintenance platform section.

5. Attach the ladder (Item 3) to the maintenance platform with the supplied bolts, one per side.

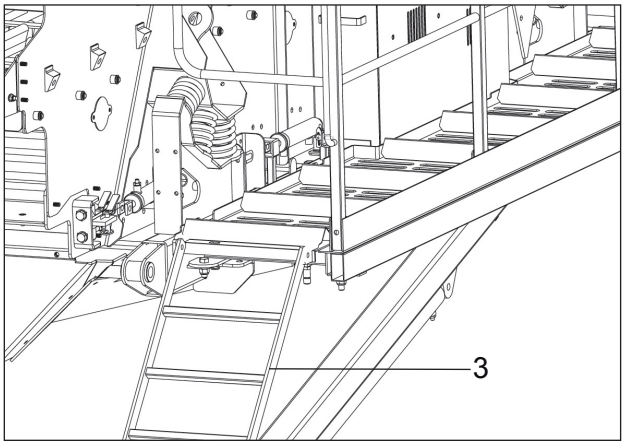

Figure 6.38 - Step Ladder Securing Bolts

6. Fold down each of the end sections (Item 5) and bolt into position.
7. Attach chains (Item 4) into position on each side of the maintenance platform.

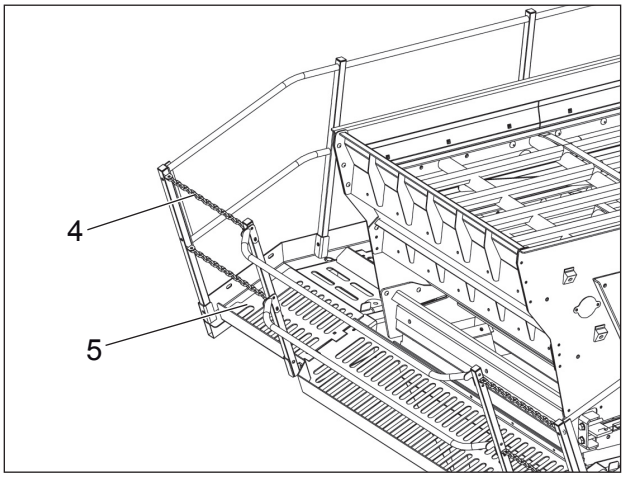

Figure 6.39 - Maintenance platform Working Position

Table of Content

7 Standard Operating Procedures 7-3

7.1 Pre Operating Checks 7-3
7.2 Initial Startup 7-4
7.3 Standard Tier 3 and Tier 3 Constant Speed Engines 7-5
(1) Starting The Engine 7-5
(a) Starter Panel Indicators (C4.4) 7-7
(b) C4.4 Monitoring System 7-8
7.4 MCU 300 Machine Operation (Tier 4 Engine) 7-9
(1) Starting the Engine 7-9
(a) No Faults on the Display Screen 7-9
(b) Active Fault on the Display screen 7-13
(c) Fault Indicator Lamps 7-18
(d) Tier 4 Fuel Save Mode 7-20
7.5 Tier 4 Dual Power Machine Operation 7-22
(1) Diesel Mode Operation 7-22
(2) Electric Mode Operation 7-23
7.6 Tier 3 Dual Power Machine Operation 7-26
(1) MCU 200 Control Panel 7-26
(a) Display 7-27
(b) Mode 7-27
(c) Viewing Measured Data 7-27
(d) View and Edit Setpoints 7-27
(e) Changing the Display Contrast 7-28
(f) Changing Display Language 7-28
(g) Viewing Active Alarms 7-28
(h) ECU Alarm List 7-28
(i) Chart Guide to Menus and Pushbutton Operation 7-29
(j) Start – Stop Sequence 7-30
(k) History File 7-31
(2) Electric Mode Operation 7-32
(a) Pre-run Check 7-32
(b) Normal Start Procedure 7-33
(3) Diesel Mode Operation 7-34
7.7 Diesel Machine Operation 7-35
(1) Starting the Engine 7-35
(2) Tracking 7-36
(a) Radio Control 7-36
(b) Tracking Using the Hand-Held Remote Control Unit 7-37
(3) Controlling the Tipping/Vibrating Grid 7-38
(a) Setting the Grid Program 7-38
(b) Operating the Grid Manually 7-39
(c) Operating the Grid Using the Remote Control 7-39
(d) Programming a New Tipping/Vibrating Grid Remote Control 7-40
(e) Programming the Receiver 7-41

(f) Changing the Grid Remote Control Batteries 7-42
(4) Starting the Engine 7-43
7.8 Standard Operation 7-44
(1) Putting into Operation 7-44
(2) Screening 7-46
7.9 Radio Controlled Tipping/Vibrating Grid 7-47
(1) Manual Operation of the Tipping/Vibrating Grid 7-47
(2) Radio Operation of the Tipping/Vibrating Grid 7-48
(a) Using a Pre-Stored Programmed Sequence 7-48
(b) Using the Up/Down Sequence Override Buttons 7-49
(c) Setting a New Programmed Sequence 7-49
(d) Programming a New Transmitter to an Existing Receiver 7-50
7.10 Operating the Reject Grid 7-52
(1) Raising the Reject Grid 7-52
(2) Lowering the Reject Grid 7-52
7.11 Operating the Shredder 7-53
(1) Raising the Shredder 7-53
(2) Lowering the Shredder 7-53
7.12 Manoeuvring 7-54
(1) Undercarriage 7-54
(2) Tracking the Machine 7-55
(3) Machine Tracking Directions 7-56
(4) Tracking 7-57
(a) Manual Tracking with the Umbilical Handset 7-57
(b) Radio Tracking with the Teleradio Remote Control 7-58
(c) Fast Tracking 7-59
(d) Fast Tracking - Constant Speed Engine 7-59
7.13 Machine Shutdown 7-60
(1) Stopping the Machine 7-60
(2) Tier 4 Final Machine Shutdown 7-61
(3) Tier 3 Constant Speed Shutdown 7-63
(4) Tier 3 Diesel Machine Shutdown 7-63
(5) Tier 3 Dual Power machine shutdown 7-64
(a) Diesel Mode 7-64
(b) Electrical Mains Power Mode: 7-64
(6) Electric Hydraulic Machine Shutdown 7-65

7 Standard Operating Procedures

7.1 Pre Operating Checks

⚠ DANGER

DO not stand on the maintenance platform whilst the screen and feeder are operating.

⚠ WARNING

Wear personal protective equipment.

Fall hazard.

Switch off, tag out and lock out the machine before carrying out pre-operating checks.

NOTICE

AVOID frequent starting and stopping of the machine unnecessarily as it WILL cause damage to the machine.

In the event the machine malfunctions for any reason, stop the machine and lock out immediately. Report the malfunction to the competent authority in charge. DO NOT continue to operate the machine UNTIL the malfunction is corrected.

PROCEDURE

1. Ensure the machine is placed on solid level ground capable of carrying the machine‘s weight. Regularly check the stability of the plant. The chassis should not bounce during operation.
2. Ensure there is adequate space around the machine for operation, material stockpiles, maintenance and vehicular movement.
3. Ensure all guards are fully secured in correct/closed position.
4. Check that all safety equipment, alarms and interlocks are operative.
5. Remove all loose items from the belt by untying the securing ropes.
6. Ensure all control valve levers are in the neutral (non-operational) position.
7. Check the engine oil level and the fuel level and replenish if necessary.
8. Check the hydraulic oil level and replenish if necessary.
9. Ensure the material being feed into the feeder or screen unit is below the size limitations recommended by the manufacturer. Do not allow build up of material at feed points.
10. DO NOT allow the engine RPM to run at a speed not suited for the application. Check the wear parts to ensure speed is suitable for the application and feed rate not excessive.

    » Engine RPM cannot be changed on a Tier III Constant Speed machine.
11. Check setup of the screen unit and adjust as necessary to the required settings.
12. Observe all safety instructions and ensure the correct protective clothing and equipment are used by operators.
13. Check the oil cooler fan and radiator for any build up of dust/dirt. Check regularly that the oil cooler fan is running correctly and that dust/dirt has not built up in the fan and radiator unit (overheating can occur if dust/dirt is allowed to build up). Blow out dust/dirt if necessary.

7.2 Initial Startup

NOTICE

Checks on the machine are crucial during the first week of operation. These checks must be carried out before operating the machine.

Ensure that there is mesh in the screenbox in all decks when the machine is operational. Should only one of the decks be needed, then an oversize mesh should be fitted to retain the structure of the screenbox, as well as to minimise wear.

Ensure that there is mesh in the bottom deck of 2 Deck vibrating grid option when the machine is operational. Should only one of the decks be needed, then an oversize mesh should be fitted to retain the structure of the screenbox, as well as to minimise wear

This section should be read and understood prior to starting the machine. If there are any doubts, consult your local Terex dealer or Terex Technical Support department.

PROCEDURE

1. Refer to the engine manufacturer's manual for initial start up of the engine.
2. Run the machine empty for a short period of time and check for abnormal noises, vibration or excessive heat from the shaft bearings.
3. Each day during the initial days of operation check the tension of the conveyor belts.
4. Frequently check the overall stability of the machine, re-position if necessary.
5. Check the machine is level, re-position if necessary.
6. Frequently check the hydraulic oil level in the tank.
7. Frequently check all oil levels.
8. Ensure that the tension of the screen mesh(es) is satisfactory.
9. Frequently check the flow of material over the screen mesh(es) to confirm satisfactory separation is taking place.
10. Make sure that the screen mesh apertures are free of 'pegged' material and that they remain in good condition.
11. Check the vibrating unit bearing temperatures using a contact thermometer on the end covers; record the temperature for future reference and fault diagnosis. (Expected temperature range: 70 – 80 ºC.)
12. Ensure that all components of the machine are operating before any material is introduced to the machine.

7.3 Standard Tier 3 and Tier 3 Constant Speed Engines

(1) Starting The Engine

⚠ WARNING

Read and understand the operations manual before starting the machine.

NOTICE

Do not start the engine if the indicated lights are not illuminated. If any red warning lights are shown on the display screen do not start the engine until the fault has been fixed.

Preheating is normally necessary when ambient temperature is below zero degrees celsius (32 degrees Fahrenheit).

If the tracking umbilical is not connected to the machine, a dummy plug must be inserted into to the connection so that the machine can be operated.

The dummy plug should be stored in the dummy plug holder when tracking the machine.

The engine must be started to provide hydraulic power to all functions.

PROCEDURE

1. Check the engine oil level and the fuel level and replenish if necessary.
2. Place throttle (Item 7) at idle.
   - » *On machines fitted with a C4.4 97KW Tier III Constant Speed engine, there is no engine speed switch, therefore this first step does not apply.*
3. Turn the ignition key (Item 8) to position (Item 2, Reference: Figure 7.2), the “on” position
   - » *The oil pressure light will illuminate for 5 seconds after key on and then go out*
   - » *The following warning lights on the control panel will illuminate.*
   - A red light (Item 1) alternator.
   - A red light (Item 2) oil pressure lamp
   - A green light (Item 3) should illuminate indicating the machine can be run.
   - A green light (Item 4) should illuminate indicating fuel on.
   - Lights (Items 5 and 6,) will light for 2 seconds, then extinguish.

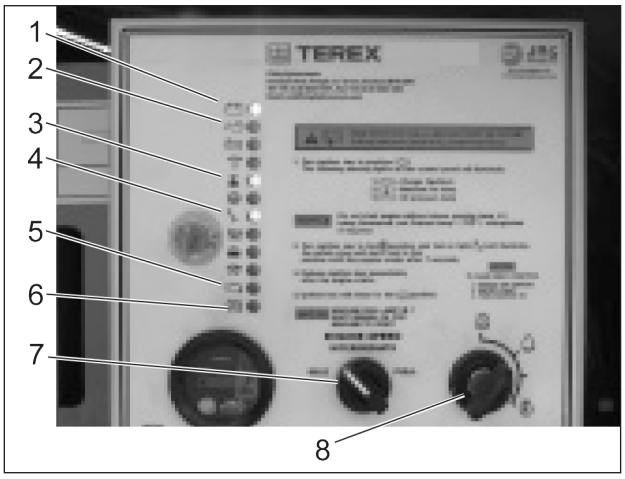

Figure 7.1 - Starter Control Panel & Throttle

4. Now turn the key to position (Item 2, Reference: Figure 7.2). Hold this position until the engine will crank and start after the warning beeper has sounded for approximately 7 seconds.

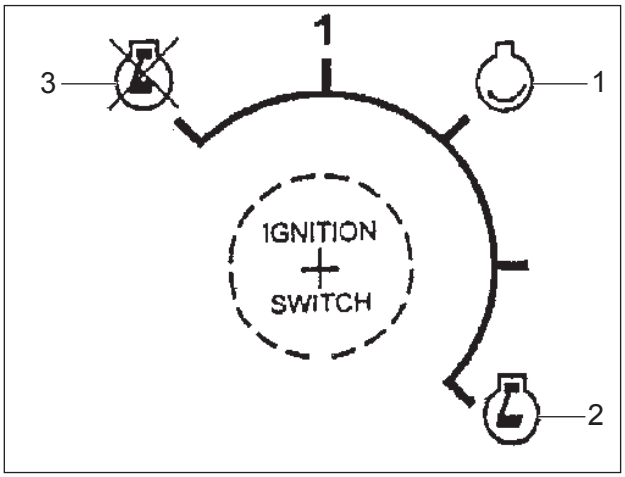

Figure 7.2 - Key Positions

5. All the lights should extinguish after start-up (with the exception of the machine run and fuel on lamps). If the other lights remain illuminated or illuminate during operation, there is a fault relevant to that indicator. Return ignition key to (Item 1, Reference: Figure 7.2) immediately after the engine starts.

6. When stopping the engine, ensure all control levers are in neutral. Reduce engine speed gradually by adjusting the throttle lever. Then turn the key to position (Item 3, Reference: Figure 7.2) and the engine will stop.

   » On machines fitted with a C4.4 97KW Tier III Constant Speed engine, there is no engine speed switch. Run the machine empty with no load for 3 to 5 minutes before turning the engine off.

(a) Starter Panel Indicators (C4.4)

⚠ DANGER

All electrical work must be carried out by a qualified electrician.

Each light on the starter box (Item A-K) will illuminate when the following occur.

Item	Indicator Light	Description
Item A	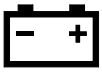	Alternator Failure
Item B		Low Oil Pressure
Item C		Low Coolant Level
Item D		Fuel Contamination
Item E		Machine Run Lamp
Item F		Air Filter Element Restricted
Item G		Fuel On Lamp
Item H		Low Hydraulic Oil Level
Item I		Emergency Stop Engaged
Item J		Preheat On
Item K		Warning Lamp
Item L		Shutdown Lamp

The Monitoring Lamps (Items K & L) monitor the Engine. The following table outlines the various lamp combinations and their meaning. For complete details of the Monitoring system, refer to the Engine Operation and Maintenance manual supplied with your machine.

(b) C4.4 Monitoring System

	Warning Lamp
	Shutdown Lamp

Warning Lamp	Shutdown Lamp	Lamp Status	Description of Lamp Status	Engine Status
On	On	Lamp Check	When the engine start switch is turned to the 'ON" position both lamps will illuminate for 2 seconds only.	The engine has not been started.
Off	Off	No Faults	There are no active diagnostic faults.	The engine is running normally
On	Off	Active Diagnostic Fault	An active diagnostic fault has been detected.	The engine is running normally
On	Flashing	Active Diagnostic Fault	A serious active diagnostic fault has been detected and an engine derate has been invoked.	The engine is running but has been derated.
Flashing	Off	Warning	One or more of the engine protection values has been exceeded.	The engine is running normally
Flashing	Flashing	Derate and warning	One or more of the engine protection values has been exceeded.	The engine is running but has been derated.
On	On	Engine Shutdown	One or more of the engine protection values has been exceeded or a serious active diagnostic fault has been detected.	The engine is shutdown or shutdown is imminent.

7.4 MCU 300 Machine Operation (Tier 4 Engine)

(1) Starting the Engine

NOTICE

Do not start the engine if any red warning lights or fault symbols are shown on the display screen. A fault symbol indicates that there is a fault relevant to that indicator which must be fixed before starting the engine.

(a) No Faults on the Display Screen

PROCEDURE

1. Switch the engine speed switch (Item 3) to low, Reference: Figure 7.3.

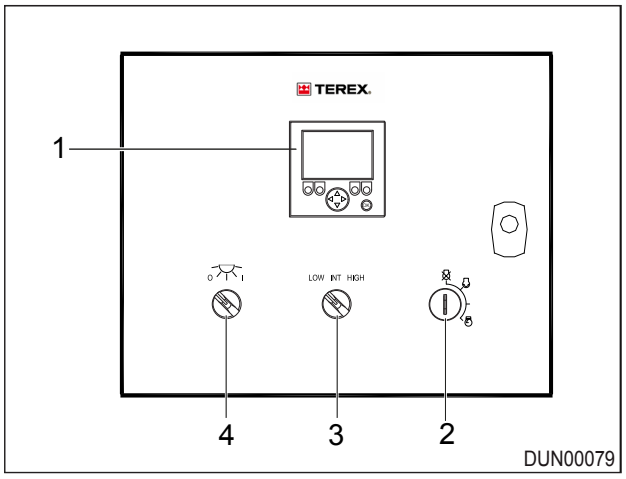

Figure 7.3 - Control Panel

2. Turn the ignition key on the control panel to the “ON” position, Figure 7.4 (Item 2).

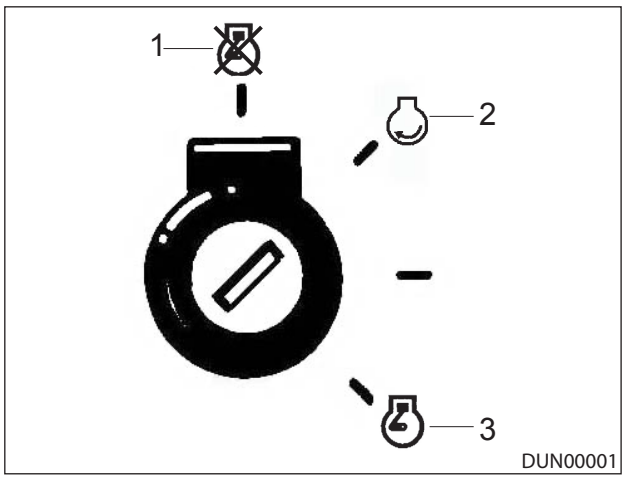

Figure 7.4 - Ignition Key Positions

Ignition Key Positions:

- Position 1: Off Position
- Position 2: On Position
- Position 3: Crank Position

3. The home screen will be displayed on the control panel display screen, Reference: Figure 7.5.

Figure 7.5 - Home Screen (No Faults)

» *The indicator lamps in the centre of the screen will illuminate and extinguish after a few seconds if there are no faults present. If the indicator lamps do not extinguish. The e-stop healthy and fuel on symbols only should light up green. Do not start the engine if any other lights are illuminated red or if there are any other faults shown on the display screen.*

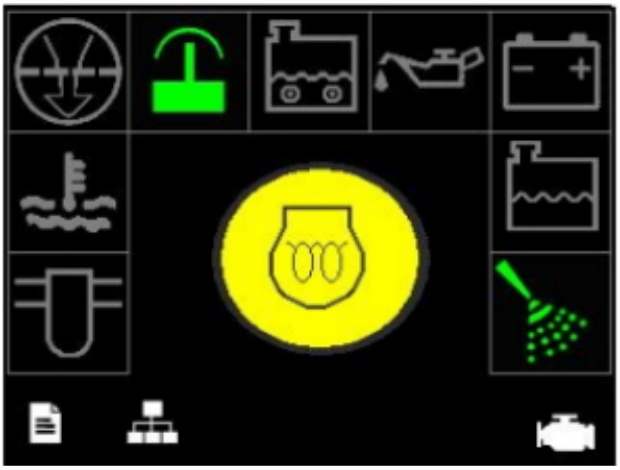

Figure 7.6 - Home Screen (Wait to Start)

» *On Tier 4 machines the wait to start lamp is illuminated briefly on the home screen, Reference: Figure 7.6. The engine can be started after this lamp goes out.*

4. Turn the key to the crank position, Reference: Figure 7.4 (Item 3).

» *The engine will crank and start after the warning siren has sounded for approximately 7 seconds.*

5. To view engine information, press the button under the engine symbol (Item 4), Reference: Figure 7.7.

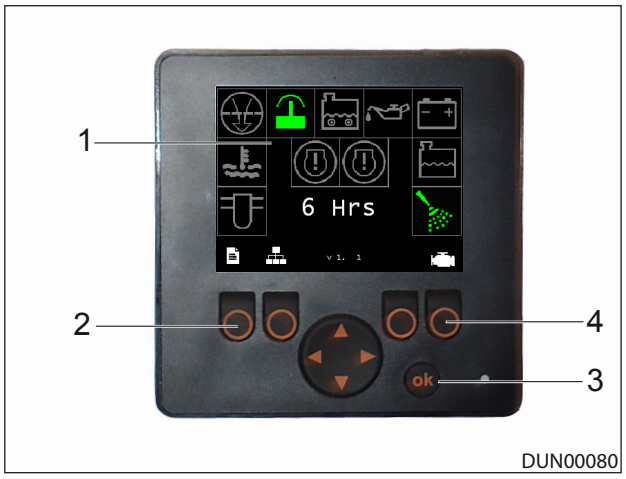

Figure 7.7 - Control Panel Display

» *The engine information screen is displayed, Reference: Figure 7.8. For a description of each of the symbols, Reference Table 7.1.*

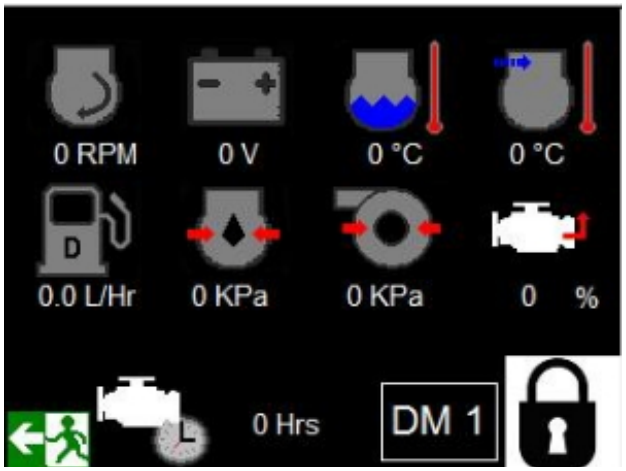

Figure 7.8 - Engine Information Screen

Table 7.1 - Engine Information Screen Symbols

Symbol	Description
	Engine Speed
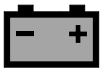	Battery Voltage
	Engine Coolant Temperature
	Engine Intake Temperature
	Fuel rate
	Engine Oil Pressures
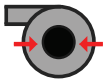	Engine Boost (or turbo) Pressure
	Percentage Engine Load
	Engine run hours

When a DM 1 code is present the DM 1 symbol will flash red. Pressing the button will take you to the Active Fault page

6. To return to the main menu home screen any time press the button under the exit symbol (Item 2), Reference: Figure 7.7.

(b) Active Fault on the Display screen

A fault symbol will be illuminated red on the home screen when a fault occurs. The symbols shown will depend on the fault.

NOTICE

Do not start the engine if any red warning lights or fault symbols are shown on the display screen. The fault symbol indicates that there is a fault relevant to that indicator which must be fixed before starting the engine.

PROCEDURE

1. Switch the engine speed switch (Item 3) to low, Reference: Figure 7.3.
2. Turn the ignition key to the “ON” position, (Position 2).

   » *The main menu is displayed on the control panel screen. A fault symbol around the outer edge of the home screen is highlighted red and a yellow safety warning symbol is displayed in the bottom left hand corner of the screen indicating that there is a fault, Reference: Figure 7.9.*

Figure 7.9 - Home Screen (Active Fault)

3. Press the button under the warning symbol (Item 2) to view the alarm history.

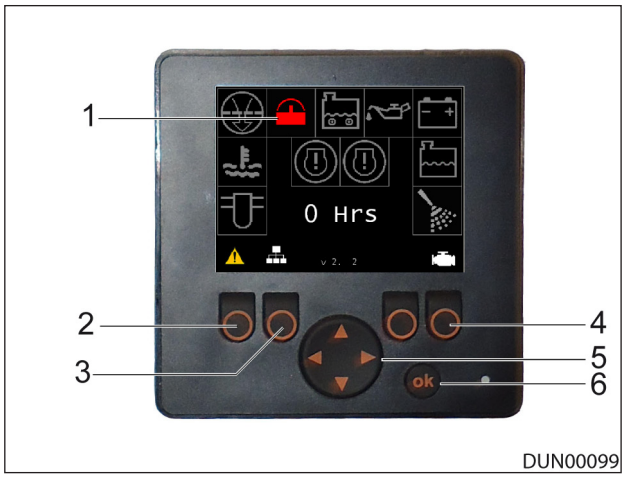

Figure 7.10 - Main Menu Active Fault

» *A screen showing the alarm symbol and corresponding fault code is displayed, Reference: Figure 7.11. The engine run hours at which the fault occurred is also displayed. Active alarms will have the yellow warning symbol displayed beside the fault symbol. If a fault symbol is shown without the yellow warning symbol, this indicates that the alarm has occurred but it is now inactive.*

Figure 7.11 - Active Fault Screen

4. The last 12 faults are stored in the control panel. Press the right direction button (Item 5) on the panel to scroll through the active faults, Reference: Figure 7.10.
5. To return to the main menu home screen any time press the button under the exit symbol (Item 2), Reference: Figure 7.10.
6. Determine the cause of the fault(s) and ensure that the problem(s) has been fixed before continuing. Refer to Troubleshooting for fault code descriptions. If the engine fault screen is shown (Figure 7.12) there is a problem with the engine. Refer to the table in Troubleshooting for a list of the engine fault codes. Refer to the engine manufacturer's manual or your local dealer for more information.

Figure 7.12 - Engine Fault Screen

7. Press the button (Item 2) on the control panel to return to the home screen, Reference: Figure 7.10.

» *The home screen will be displayed with the fault symbol shown orange indicating that the fault is cleared, Reference: Figure 7.13.*

Figure 7.13 - Home Screen (Fault Cleared)

8. If there is a communication loss fault (FC010), the communication loss fault icon will be displayed in the centre of the home screen , Reference: Figure 7.14.

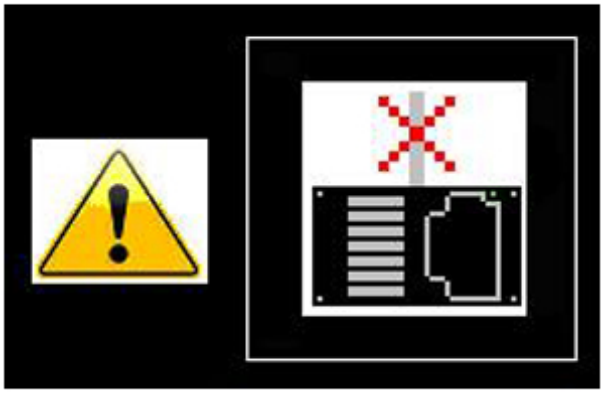

Figure 7.14 - Communication Fault

9. Press the button 3 (Reference: Figure 7.10) on the panel to view the machine inputs and outputs, Reference: Figure 7.15.

   » *The controller status screen showing the input and output connections will be displayed, Reference: Figure 7.15. If there is a communications fault, all of the icons will be shown in grey.*

Figure 7.15 - Controller Status Screen

10. If any of the inputs or outputs are illuminated green, there is healthy communication between the PLC and the display screen. If any of the inputs are grey, the input to the controller is not active. If any of the outputs are grey, the output to the controller is not active. Ensure that all connections are correct.

    » *Refer to tables below for descriptions of each of the inputs and outputs shown on the controller status screen.*

Table 7.2 - Inputs

Item	Description
I0	ESTOP HEALTHY
I1	TRACK REQUEST
I2	LOW SPEED
I3	INTERSPEED
I4	HIGH SPEED
I5	CONV1 START REQ
I6	CONV2 START REQ
I7	JACK LEG SENSORS
I8	AIR FILTER RESTRICTION
I9	START ENGINE
I10	MACHINE STOP
I11	HYD OIL LEVEL

Table 7.3 - Outputs

Item	Description
O0	ENGINE CRANK
O1	FUEL SYSTEM
O2	HYD OIL FAN
O3	SIREN/BEACON
O4	TRACKS ENABLE
O5	SPARE
O6	SPARE
O7	SPARE
O8	SPARE
O9	SPARE

Table 7.4 - Expansion Node Inputs

Item	Description
I1	FOLDING SENSOR 1
I3	FOLDING SENSOR 2
I5	FOLDING SENSOR 3
I7	SPARE

Table 7.5 - Expansion Node Outputs

Item	Description
O2	FOLD1 SOL
O4	FOLD2 SOL
O6	FOLD3 SOL
O8	SPARE

11. Press the button (Item 2) on the control panel to return to the home screen, Reference: Figure 7.10.
12. Turn the ignition key to the crank position (Position 3).

    » *The engine will crank and start after the warning beeper has sounded for approximately 7 seconds.*

(c) Fault Indicator Lamps

The fault indicator lamps in the centre of the home screen will flash when powering up the ECU on switch on but will switch off again if there are no faults.

If either or both of the indicator lamps are illuminated or flashing while the engine is running, there is a fault with the engine system which must be dealt with immediately, Reference: Figure 7.16 and Figure 7.17. Refer to the below table to determine the fault indicated by the lamps.

NOTICE

All faults must be identified and resolved as soon as possible.

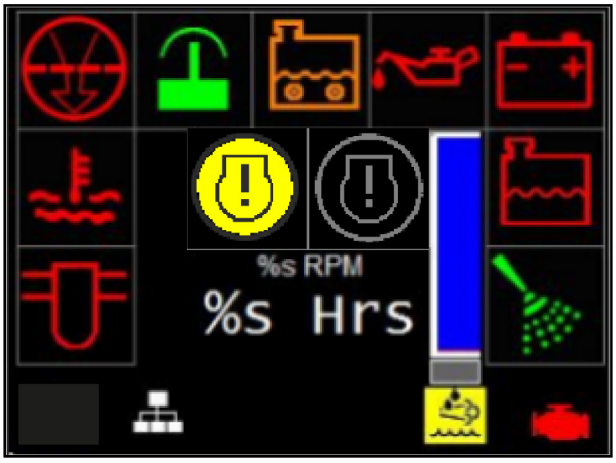

Figure 7.16 - Warning Lamp (Alert Lamp)

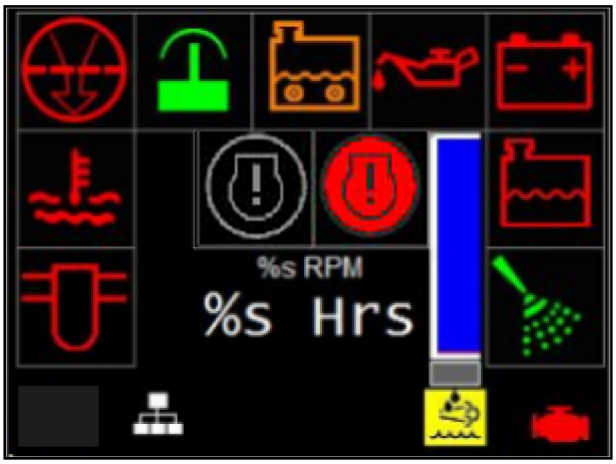

Figure 7.17 - Shutdown Lamp (Action Lamp)

Table 7.6 - Indicator Lamps Logic

Warning Lamp	Shutdown Lamp	Lamp State	Description	Engine State
On	On	Bulb Check	When the ignition is turned on the EMS shall illuminate each bulb for 2 seconds and extinguish them afterwards.	Key on but engine has yet to be cranked.
Off	Off	No faults present	With both lamps off whilst engine is running then there are no currently active warnings diagnostic's or events.	Engine is running with no detected faults.
On	Off	Active diagnostic	Should the warning lamp illuminate during engine running this indicates that an Active diagnostic (Electrical fault) is present.	Engine is running normally but has one or more faults with the engine management system.
On	Flash	Derate (invoked by active diagnostic)	Should the warning lamp illuminate and the shutdown lamp flash during engine running this indicates that an Active diagnostic (Electrical fault) is present. The diagnostic is sufficiently serious to invoke engine derate.	Engine is running but has one or more Active diagnostic events that have initiated engine derate.
Flash	Off	Warning (warning only)	Should the warning lamp flash during engine running this indicates that one or more of the engine protection strategy warning values have been exceeded but not to a level that will invoke Derate or Shutdown.	Engine is running normally but has one or more monitored engine parameters outside of the acceptable range.
Flash	Flash	Derate (warning and derate)	Should both the Warning lamp and Shutdown lamp flash during engine running this indicates that one, or more, of the engine protection strategy values have been exceeded beyond the level required to invoke engine Derate.	Engine is running but one or more of the monitored engine parameters has gone beyond that of warning only and has now exceeded those set for engine derate.
On	On	Engine shutdown	Should both the Warning lamp and Shutdown lamp illuminate during engine running this indicates that either: 1. One or more of the engine protection strategy shutdown values has been exceeded. 2. A serious Active diagnostic has been detected. Shortly after (time duration to be agreed) engine will shutdown.	Engine is either shutdown or shutdown is imminent, one or more monitored engine parameters have gone beyond that of warning or derate and have now exceeded those set for engine shutdown. Or a serious Active diagnostic has been detected

(d) Tier 4 Fuel Save Mode

NOTICE

The Fuel Save Mode can be enabled or disabled from the MCU 300 control panel, as well as the shutdown and idle times.

PROCEDURE

1. Observe all safety warnings.
2. Start the engine.

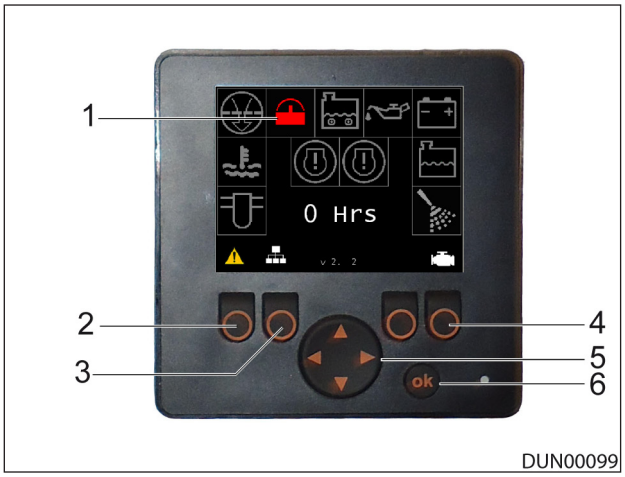

Figure 7.18 - Control Panel

Figure 7.19 - Home Screen (No Faults)

3. To view engine information, press the button under the engine symbol (Item 4) on the control panel.

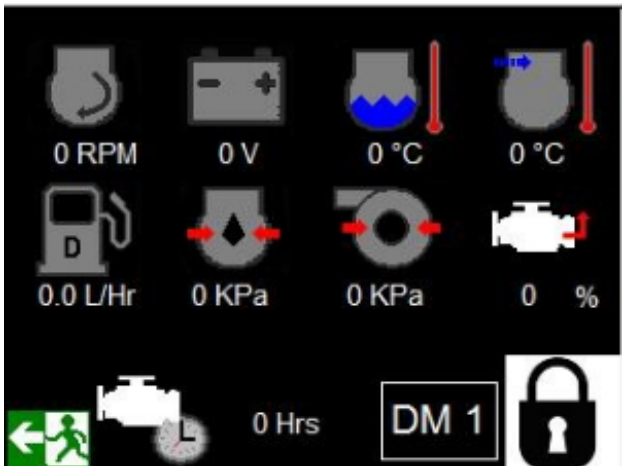

Figure 7.20 - Engine Information Screen

4. To view fuel save information screen, press the right arrow key (Item 5) on the control panel.

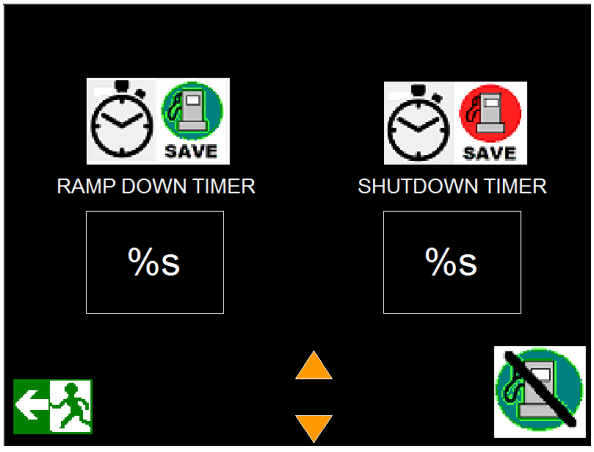

Figure 7.21 - Fuel Save Information Screen

5. Press button 4 on the control panel to enable/disable fuel save mode.
6. Use the left and right arrows to select the ramp down or shutdown timer.
7. Use the up and down arrows to set the time.

   » *The time has a range from 5 to 60 minutes.*

7.5 Tier 4 Dual Power Machine Operation

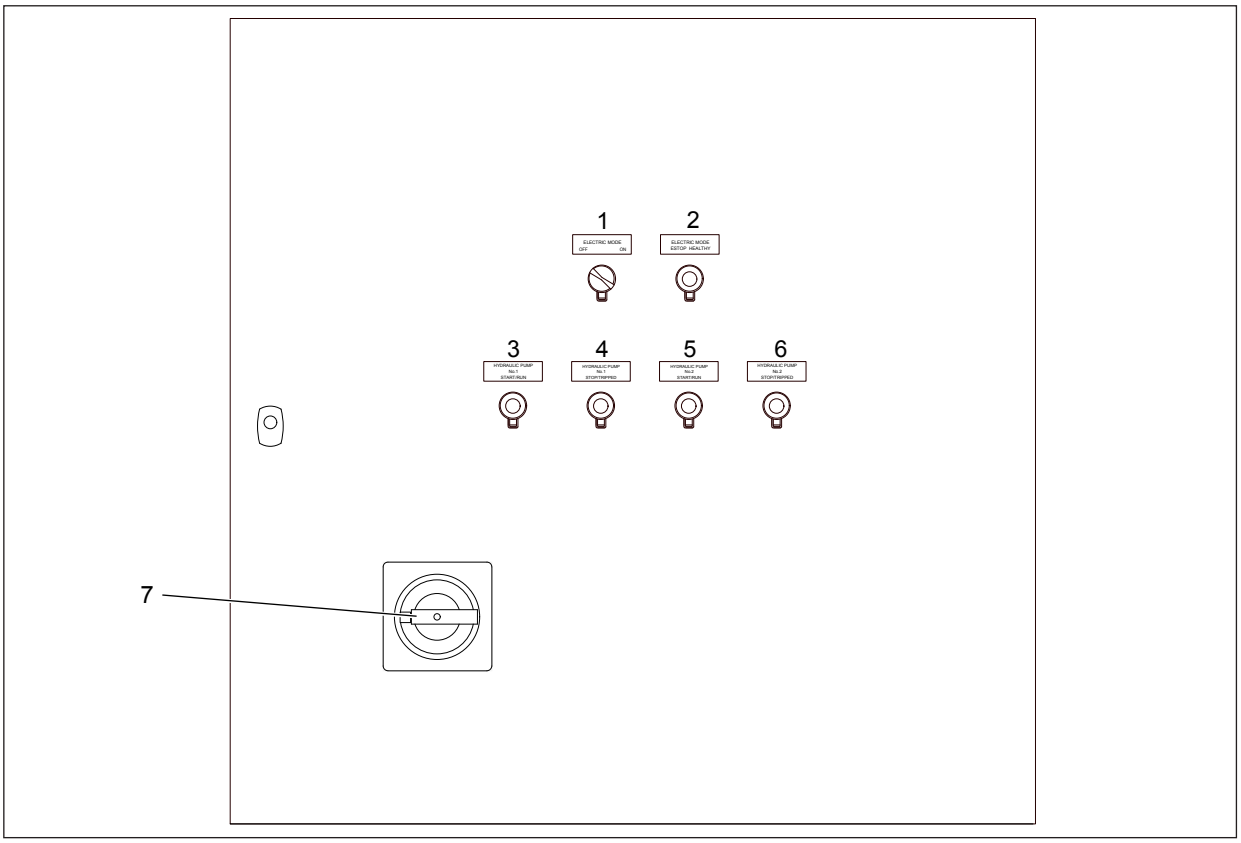

Figure 7.22 - Tier 4 Dual Power Control Panel

Refer to Chapter 4 for identification of control panel components.

(1) Diesel Mode Operation

PROCEDURE

1. Ensure the Electric mode switch (Item 1) is OFF.
2. Switch the isolator switch (Item 7) on the control panel to on.
3. To operate the machine in diesel mode refer to Section MCU 300 Machine Operation.

(2) Electric Mode Operation

In Electric Mode the Operator can run the machine in either MANUAL (Test) Mode or AUTO Mode

PROCEDURE

1. To allow the machine to operate in Electric mode, ensure the electric mode switch (Item 1) is ON.
2. Switch the isolator switch (Item 7) on the control panel to on.

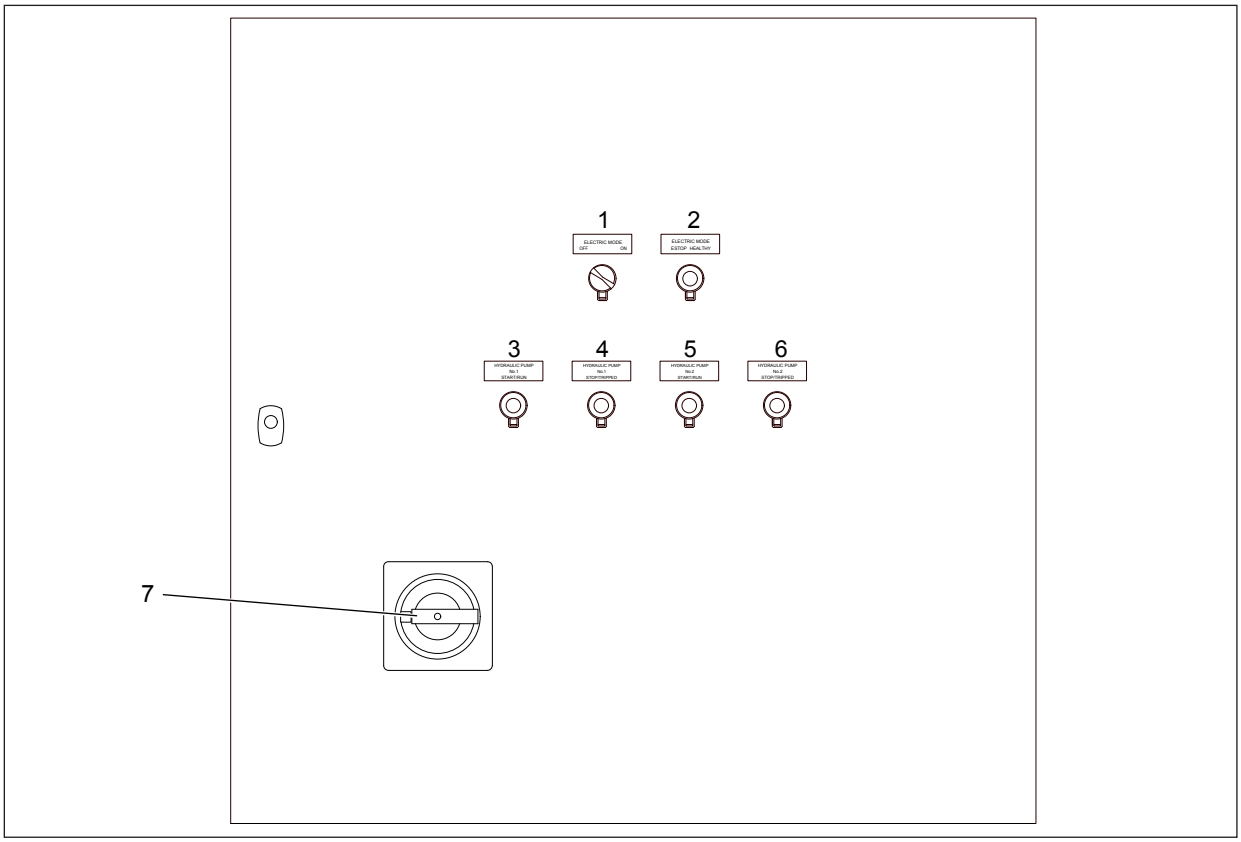

Figure 7.23 - Tier 4 Dual Power Control Panel

3. Turn the ignition key on the control panel to the “ON” position (Item 2).

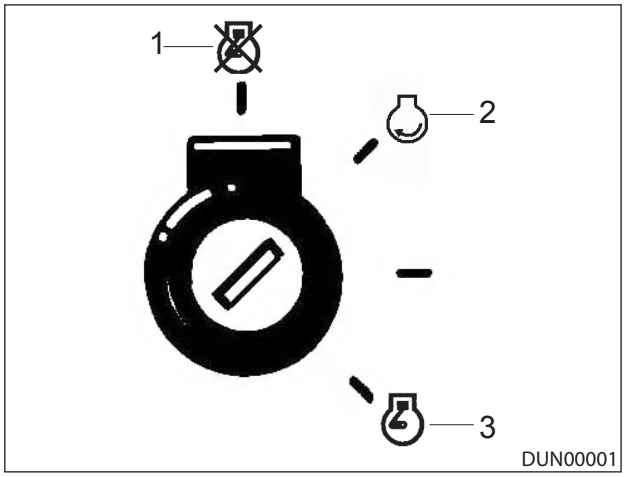

Figure 7.24 - Ignition Key Positions

» *If all Emergency Stops on machine are OK then "Electric Mode Estop Healthy" Lamp (Item 2) should illuminate*.

» *The electric mode home screen will be displayed on the control panel, Reference: Figure 7.25.*

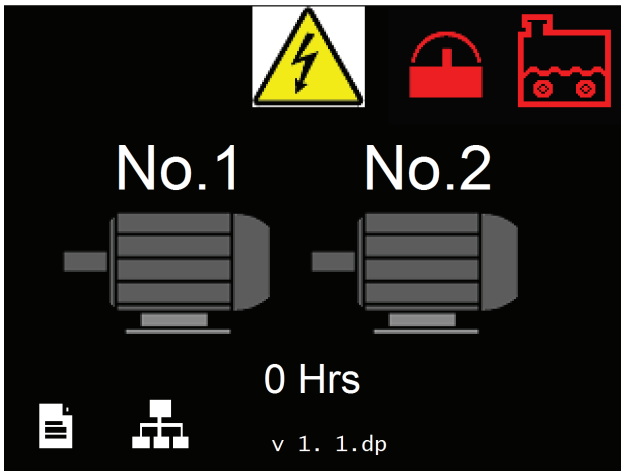

Figure 7.25 - Electric Mode Home Screen

4. Turn the ignition key to the crank position (Item 3).

» *Motor No.1 starts to flash green, when fully running will change to steady green*.

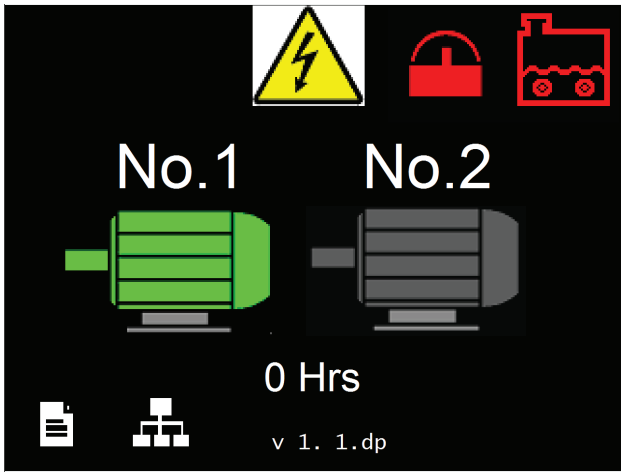

Figure 7.26 - Motor 1 Running

» *Then motor No.2 starts to flash green, when fully running will change to steady green.*

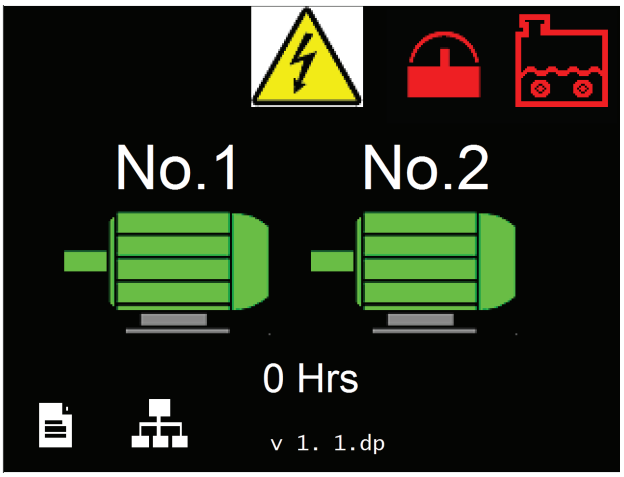

Figure 7.27 - Motor 1 and 2 Running

5. If a motor goes to Fault condition the motor symbol will change to red.

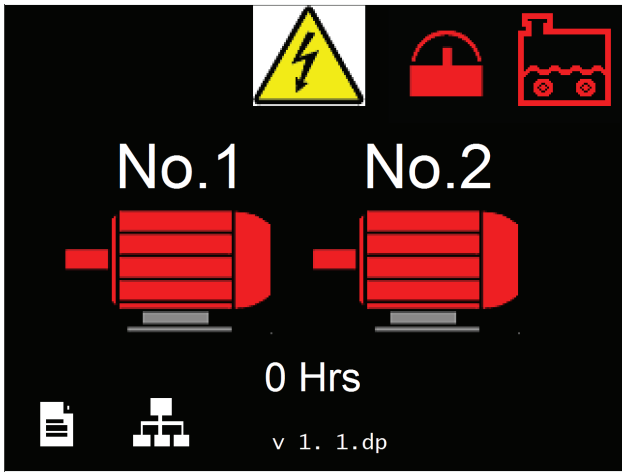

Figure 7.28 - Motor 1 and 2 Fault

6. Switch off the machine and ensure the problem is fixed before restarting.

7.6 Tier 3 Dual Power Machine Operation

(1) MCU 200 Control Panel

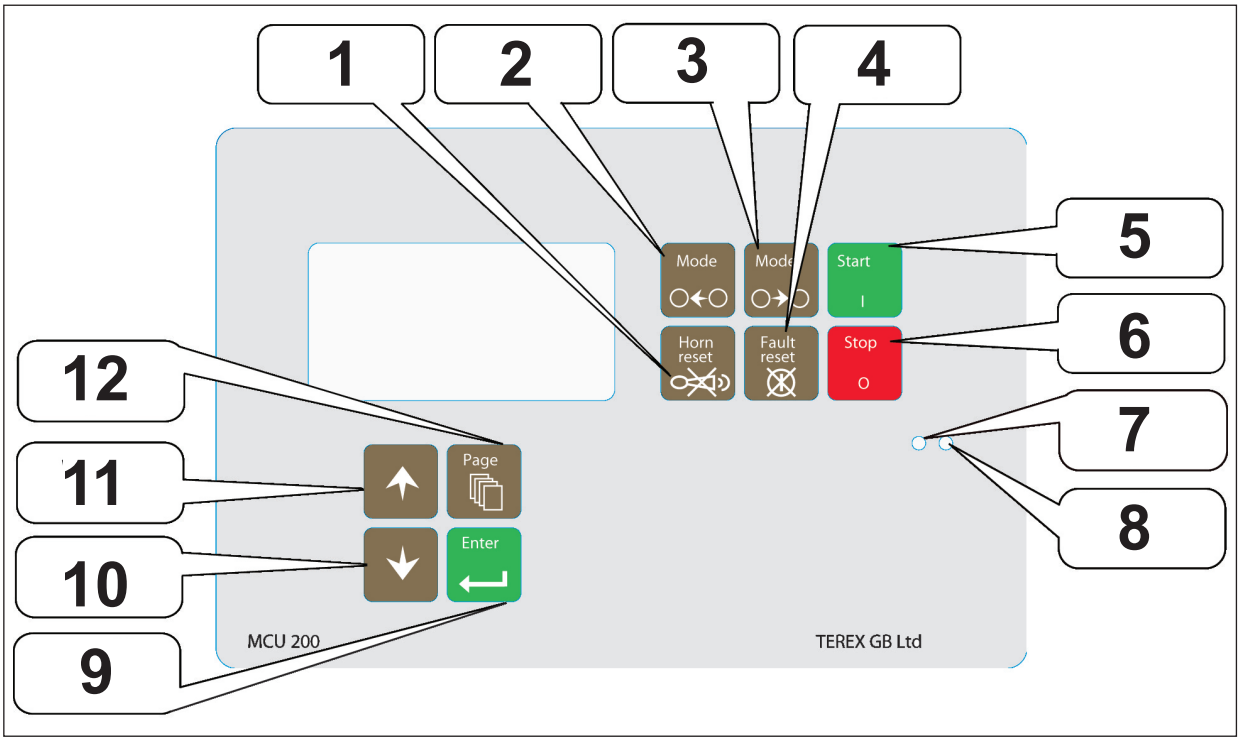

Figure 7.29 - MCU 200 Operator Interface

Table 7.7 - MCU 200 Function Key and Display LED Description

Number	Description
1	Unused
2	Mode Select - Backward Cyclic Selection of OFF-MAN-AUT
3	Mode Select - Forward Cyclic Selection of OFF-MAN-AUT
4	Fault Reset – Acknowledges Faults and Alarms
5	Start – Begins Start Sequence
6	Stop – Stops Engine
7	Green LED – Engine Running
8	Red LED – Fault Present
9	Enter – Confirm Setpoint value
10	Down select Button – Setpoint adjust / Screen Select etc
11	Up select Button – Setpoint adjust / Screen Select etc
12	Page – Cyclic Selection of Display Mode

(a) Display

There are three Display Menus available:

1 Measurement

2 Adjustment

3 History

PROCEDURE

1. Scroll between the three Display Menus using the PAGE button.

(b) Mode

There are three Engine Modes available:

OFF

MAN (Manual)

AUT (Auto)

You must enter minimum Level 2 Password to change modes. MCU 200 must be in MAN mode to function.

PROCEDURE

1. Use the MODE buttons to select between the three modes.

(c) Viewing Measured Data

PROCEDURE

1. Press the PAGE button repeatedly until the Measurement Display is active.
2. Then use the UP and DOWN buttons to select the screen with the requested data.
3. Press ENTER to enter that page.

(d) View and Edit Setpoints

Setpoints marked with '*' are password protected.

PROCEDURE

1. Press the PAGE button repeatedly until the Adjustment Display is active.
2. Use the UP and DOWN buttons to select the requested Setpoint Group.
3. Press ENTER to confirm.
4. Use the UP and DOWN buttons to select the requested Setpoint.
5. Press ENTER to edit.
6. Use the UP and DOWN buttons to modify the requested Setpoint. Pressing and holding the UP or DOWN keys will cause the value to ramp up or ramp down.
7. Press ENTER to confirm or PAGE to escape without saving change.

(e) Changing the Display Contrast

PROCEDURE

1. Press ENTER and UP or DOWN at the same time to change the display contrast.

(f) Changing Display Language

PROCEDURE

1. Hold ENTER and then press PAGE to go to Software Version Screen.
2. Press PAGE to enter Language Selection Screen.
3. Use the UP / DOWN buttons to select required language.
4. Press ENTER to confirm language selection.

(g) Viewing Active Alarms

The Active Alarm Screen is the last screen in the Measurement Menu.

The Active Alarm List will be displayed each time a new alarm is activated.

Alarms have four states as shown below:

Description	
*Wm Water temp	Active not accepted alarm
Wm water temp	Active accepted alarm
*Wm Water temp	Inactive not accepted alarm
	Inactive accepted alarm

PROCEDURE

1. Select Measurement Menu.
2. Press UP to view Active Alarms.
3. Press FAULT RESET to accept all alarms.

   » Non-active alarms will clear from the screen.

(h) ECU Alarm List

There is a second Alarm List that deals with only those alarms sent over CanBus via J1939 protocol from electronic engine ECUs.

This Alarm List is one screen above the Main Active Alarm List.

If an ECU alarm is received, it will be indicated by an exclamation mark (!) on the Main Screen and by ECU FAULT on the standard alarm list.

(i) Chart Guide to Menus and Pushbutton Operation

The figure below shows the navigation procedure through the various screens in the MCU 200.

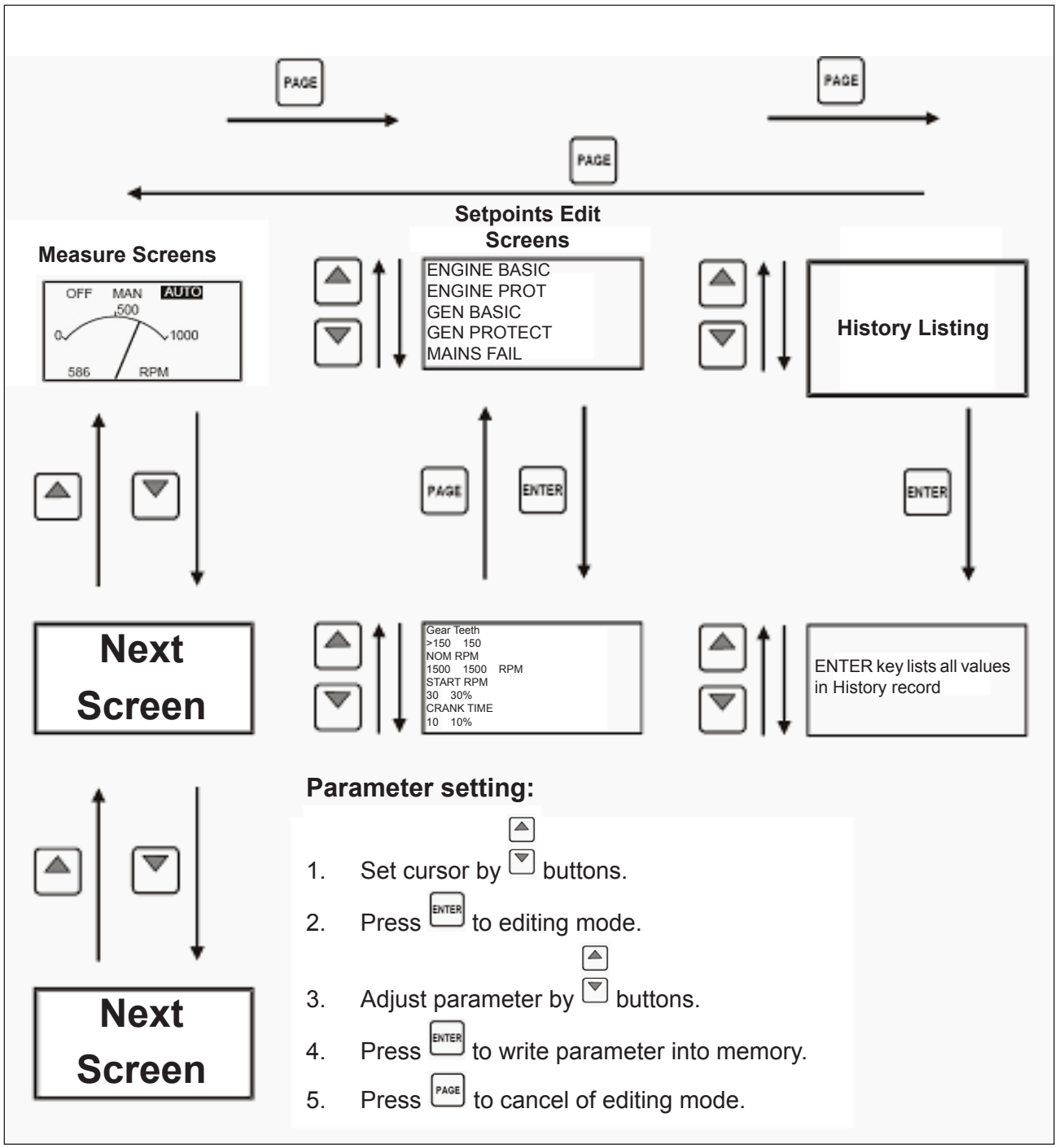

Figure 7.30 - Chart Guide to Menus and Pushbutton Operation

(j) Start – Stop Sequence

The order in which the MCU controller starts and stops the engine is given below to enable operators to have a better understanding of the control logic which will aid in any service issues.

The Start-up routine can be interrupted at any time by pressing the STOP button.

PROCEDURE

1. Ensure System is in Ready State as indicated on the Home Page.
2. Press Start button or turn Keyswitch to Crank position.
   - » *Siren & Beacon will switch ON. Fuel Solenoid will switch ON. After 10 seconds, Siren and Beacon will switch OFF.*
   - » *Starter Solenoid will switch ON. Starter Solenoid will stay on for the duration of the MaxCrankTime as set in the setpoints menu or until the engine RPM is greater than the Start RPM as set in the setpoints menu.*
   - » *Once the RPM is greater than the Start RPM, the control system will enter the Running State.*
   - » *If the engine RPM does not exceed the Start RPM within the MaxCrankTime, the system will pause for three seconds then repeat the process.*
   - » *This Start process will repeat three times after which if the Running state is not achieved the system will shutdown and a Start Fail fault will be displayed.*
3. To restart the sequence, press Fault Reset button and then the Start Button (or Ignition Switch to crank position).
4. To stop the engine at any time, press the Stop button.
   - » *If a Stop Delay time is enabled this will begin to count down and be displayed on the Home page. Once this time has elapsed the Fuel Solenoid will disengage and the engine will stop.*
5. If the Stop button is pressed a second time during the Stop Delay, the engine will stop immediately.
6. If no Stop Delay has been enabled, pressing the Stop button once will disengage the Fuel Solenoid and stop the engine.

(k) History File

The MCU 200 stores a record of each important event into a history file. The file holds 117 events. Once this count is reached, the older events are overwritten.

Historical Event Structure

Abbreviation	Historical Value
Num	Number of Historical Event
Reason	Event Specification
Date	Date of Historical Event in format DD/MM/YY
Time	Time of Historical Event in format HH:MM:SS
RPM	Engine Speed
Ubat	Battery Voltage
OilP	Oil Pressure (if used)
EngT	Engine Temperature (If used)
FLvl	Fuel Level (If used)
AIM1	Unused
AIM2	Unused
AIM3	Unused
AIM4	Unused
BIN	State of Binary inputs (1=Closed, 0=Open)
BIM	State of Additional Binary Inputs (1=Closed, 0=Open)
BOUT	State of Binary Outputs (1=Closed, 0=Open)
BOM	State of Additional Binary Outputs (1=Closed, 0=Open)
FC	ECU Alarm Failure Code
FMI	ECU Alarm Failure Mode Identifier

Viewing History

PROCEDURE

1. Press the PAGE button repeatedly to access the History Page.
2. Press UP or DOWN to select required Historical Entry.
3. Press ENTER to scroll to the Right and view various measured data at that Log Time.
4. Use the PAGE button to get back to the Measurement Screen.

(2) Electric Mode Operation

NOTICE

To operate in electric mode, first make sure that a suitably sized supply cable is connected safely to the dual power control panel isolator input side.

Ensure that this cable is suitably protected at the supply side with the appropriate protection and isolating device in strict accordance with local and international regulations.

Supply cable should only be installed by a qualified electrician.

(a) Pre-run Check

Refer to Chapter 4 for component locations.

NOTICE

Before the machine can be run normally, the direction of both motors must be checked.

Do not leave the motors running while checking the direction. Simply 'Pulse' the motor as described. Failure to follow these directions may result in damage to the motors and / or pumps.

PROCEDURE

1. First, note the required direction of the hydraulic pumps, usually indicated on the pump housing. If unsure, contact Terex for advice.
2. Ensure all circuit breakers are in the ON position and that the Battery Isolator switch on the machine Powerunit is locked in the OFF position.
3. Ensure all Emergency Stop buttons are released and that it is safe to start the machine.
4. Switch on the Main Panel 3P 160A Isolator switch.
5. Switch the Operating Mode Selector Switch to Electric Mode.
   - » *The Electric Mode lamp will illuminate.*
6. Switch Test / Manual selector switch to TEST mode.
7. Press the Emergency Reset Button on the main control panel.
   - » *Providing the emergency stop circuit is working correctly, the green Emergency Stop Healthy Lamp will illuminate.*
8. Next Press the Pre-Start button.
   - » *This will cause the siren and beacon to activate. After 7 seconds the, Pre-Start lamp will illuminate indicating it is clear to start the machine.*
9. Press the Oil Cooler Start Button.
   - » *The Oil Cooler Run Lamp will illuminate and the Oil Cooler Fans in the engine Powerunit will activate.*
10. Next press Motor 1 Start button followed by Motor 1 Stop button in quick succession.
11. Check that Motor 1 is running in the correct direction.
12. Repeat steps 10 and 11 for Motor 2.
13. If the motors are running the wrong direction, swap 2 of the supply cable phases.
14. Do not swap the motor connections in the main control panel as these are tested before leaving the factory.
15. Once the motors are running the correct direction the machine can be started as follows.

(b) Normal Start Procedure

Refer to Figure Chapter 4 for component locations

NOTICE

If the Main Motors & oil cooler are not started within 30 seconds of the Pre-Start lamp illuminating, The Pre-Start sequence will reset and will need to be repeated in order to start the machine.

PROCEDURE

1. Ensure all circuit breakers are in the ON position and that the Battery Isolator switch on the machine Powerunit is locked in the OFF position.
2. Ensure all Emergency Stop buttons are released and that it is safe to start the machine.
3. Switch on the Main Panel 3P 160A Isolator switch.
4. Switch the Operating Mode Selector Switch to Electric Mode.
   - » *The Electric Mode lamp will illuminate.*
5. Switch Test / Manual selector switch to MANUAL mode.
6. Press the Emergency Reset Button on the main control panel.
   - » *Providing the emergency stop circuit is healthy, the green Emergency Stop Healthy Lamp will illuminate.*
7. Next Press the Pre-Start button.
   - » *This will cause the siren and beacon to activate. After 7 seconds the, Pre-Start lamp will illuminate indicating it is clear to start the machine.*
8. Press the Oil Cooler Start Button.
   - » *The Oil Cooler Run Lamp will illuminate and the Oil Cooler Fans in the engine Powerunit will activate.*
9. Press Motor 1 Start button.
   - » *The Main contactor and Star contactors (KM1 and KM1.1) will energise. After approx. 5 seconds, the Star contactor will disengage and the Delta contactor (KM1.2) will energise. This will cause the Motor 1 Run Lamp to illuminate.*
10. Press Motor 2 Start button.
    - » *The Main contactor and Star contactors (KM2 and KM2.1) will energise. After approx. 5 seconds, the Star contactor will disengage and the Delta contactor (KM2.2) will energise. This will cause the Motor 2 Run Lamp to illuminate.*
11. Once both motors and the oil cooler fans are running, the machine components can be started using the manual levers.

(3) Diesel Mode Operation

NOTICE

To operate in diesel mode first make sure that the mains electric supply is switched off and disconnected if possible.

It is not advised to run the machine in diesel mode with the electric cable attached due to the ability of the machine to be tracked in this mode.

PROCEDURE

1. Ensure the battery is connected and the battery isolator switch is in the ON position.
2. Ensure the Main Panel Isolator is in the OFF position.
3. Switch the Operating Mode Selector Switch to Diesel Mode.
4. Switch the Ignition Switch to the ON position.
   - » *The MCU 200 controller will power up and the screen will illuminate.*
5. If there are any un-cleared or active faults, the Display will show ‘Not Ready’.
6. Press the Fault Reset Button on the MCU 200 to clear any inactive faults.
7. Ensure the MCU 200 is in MAN mode.

7.7 Diesel Machine Operation

(1) Starting the Engine

All control levers must be in the neutral (non-operational) position.

⚠ WARNING

Wear personal protective equipment.

NOTICE

Do not start engine without the mentioned warning lights being illuminated.

If the warning lights fail to extinguish, stop the engine and detect the fault before using the machine.

PROCEDURE

1. Observe all safety warnings.
2. Turn ignition key to position 2.

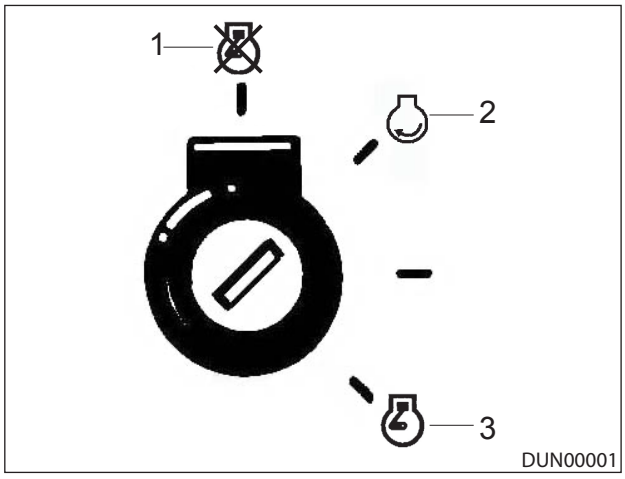

Figure 7.31 - Ignition Key Positions

» The following warning lights on the control panel will illuminate:

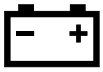	(B) - Charge lamp
	(F) - Oil pressure lamp
	(O) - Emergency stop

3. Fully depress and hold override button.

   » Fuel solenoid engages and the control lamp (D) is extinguished.

4. Turn ignition key to position 3 and hold until the safety siren stops.

   » The oil pressure light will illuminate for 5 seconds after key on and then go out.

5. Release ignition key immediately after the engine starts.

   » Oil pressure lamp (F) should extinguish.

(2) Tracking

(a) Radio Control

The radio control unit consists of a receiver and a hand held, battery powered radio control unit. It is only as an optional extra.

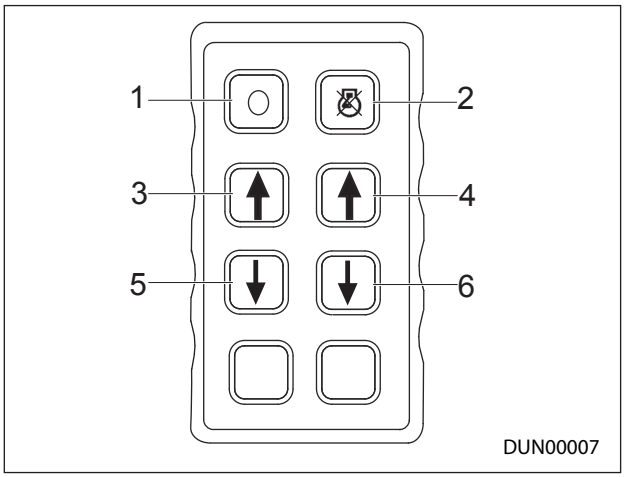

Figure 7.32 - Tier 3 Hand-held Radio Control Unit

1 Remote Off Button

2 Engine Stop Button

3 Left Hand Forward Track

4 Right Hand Forward Track

5 Left Hand Reverse Track

6 Right Hand Reverse Track

To operate the radio control:

PROCEDURE

1. Observe all safety warnings
2. Start the Engine
3. Ensure that all hydraulic control levers are in the correct positions.
4. Remove the umbilical from the machine.
5. Press any button on the transmitter.

   » After a 7 second delay has elapsed the directional switches become active.
6. At this stage pressing the various Track direction buttons (Items 3 to 6) will engage the respective track solenoid.
7. In order to deactivate the handset press the remote off button (Item 1).

(b) Tracking Using the Hand-Held Remote Control Unit

NOTICE

If the machine stop (Item 3) is pressed do not reset it until tracks and surrounding area have been checked and it is safe to move the machine. When the machine stop button has been pressed the engine will cut out and will need to be started after resetting the machine stop button. The umbilical machine stop (Item 3) can be reset by twisting it clockwise one quarter turn.

When the remote control unit is not in use, the function buttons must remain in the neutral position.

When the machine has been moved to the desired location further movement can be prevented by moving the on/off switch to the left position.

PROCEDURE

1. Observe all safety warnings
2. Ensure that the umbilical is connected to the machine, and that the umbilical E-Stop (Item 3) is not pressed.
3. Start the machine.
4. Ensure that all levers on the control bank are set to the tracking position. That is, the track levers are both in the down position all other levers should be in the neutral position.
5. Press the ‘tracks on/off button’ (Item 2) on the umbilical to the right, this is the track position.

   » At this point the siren should sound for 7 seconds and the tracking beacon will flash.
6. The machine can now be tracked using the direction controls on the umbilical.

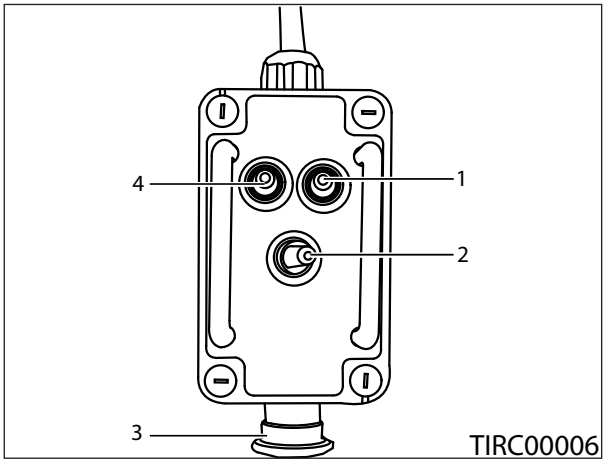

Figure 7.33 - Tier 3 Hand-Held Remote Control Unit

1 Right hand track forward/reverse

2 Tracking On/Off Switch

3 Umbilical machine stop

4 Left hand track forward/reverse

(3) Controlling the Tipping/Vibrating Grid

(a) Setting the Grid Program

The grid program can only be actuated using the remote control.

The angle that the grid rises to needs to be set using the remote control when the system is installed. The receiver box can be found above the door leading to the power unit.

⚠ WARNING

Falling material hazard. Be careful of material on the tipping/vibrating grid before activation. There is a serious danger of falling debris.

Do no work under unsupported equipment.

Do not walk near material discharge areas. You are at risk of serious head injury or death. Wear a hard hat and eye protection at all times, when working in the vicinity of the machine.

PROCEDURE

1. Observe all safety warnings.
2. Start the engine. Ensure that the engine is running and that the grid is fully down
3. Press the top button (Item 1) on the side of the receiver twice and release. Press a third time and hold down.

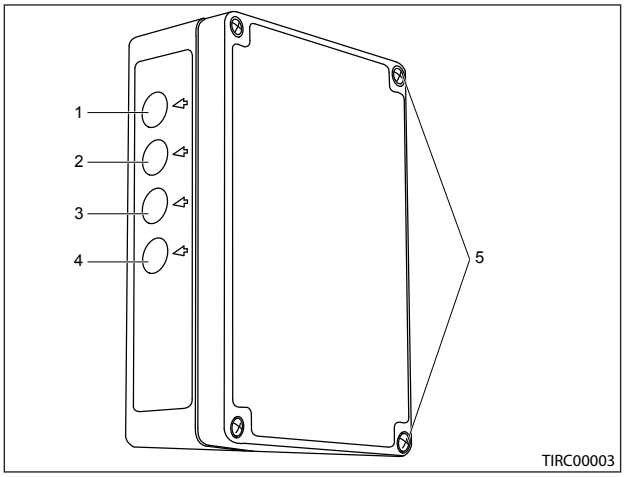

Figure 7.34 - Tipping/Vibrating Grid Receiver Box

4. The grid should start to rise. Once it has reached the required angle (this should be the end of the hydraulic rams stroke) release the button and the grid should stop.
5. Repeat this exercise for the lowering cycle by pressing the second button on the receiver box (Item 2).
6. This cycle will be recorded and each time the grid is operated using the remote control the same angle and speed will be achieved.

(b) Operating the Grid Manually

PROCEDURE

1. Observe all safety warnings.
2. Start the engine. Ensure that the engine is running and that the grid is fully down
3. To raise the grid manually press and hold button (Item 3), Reference: Figure 7.34. Once the grid has achieved the required height release the button.
4. To lower the grid manually press and hold button (Item 4), Reference: Figure 7.34. Once the grid is completely down release the button.

(c) Operating the Grid Using the Remote Control

The grid is designed to finish the cycle. If the grid is stopped in the rise cycle, once the cycle is restarted it will continue to its highest point before lowering again. The remote control has an automatic turn off feature. The system also has an operating range of approximately 100 m. But longer or shorter distances will be achieved depending on the location of the receiver box in relation to the remote control transmitter. The surroundings will also affect the range of the device. The units are designed to operate with internal aerials.

⚠ WARNING

Before activating the grid cycle using the remote control, ensure that the grid is fully down.

Be careful of material on the grid before activation. Serious danger of falling debris.

PROCEDURE

1. Observe all safety warnings.
2. Start the engine. Ensure that the engine is running and that the grid is fully down.
3. To activate the remote control press the on button (Item 4) twice. The LED (Item 3) will flash once to indicate that the remote control is active.
4. To activate the cycle press button (Item 1) once.

   » *The LED (1) will flash rapidly each time a button is pressed.*
5. To stop the grid in mid-cycle press button (Item 2) once.
6. To restart the cycle press button (Item 1) again.

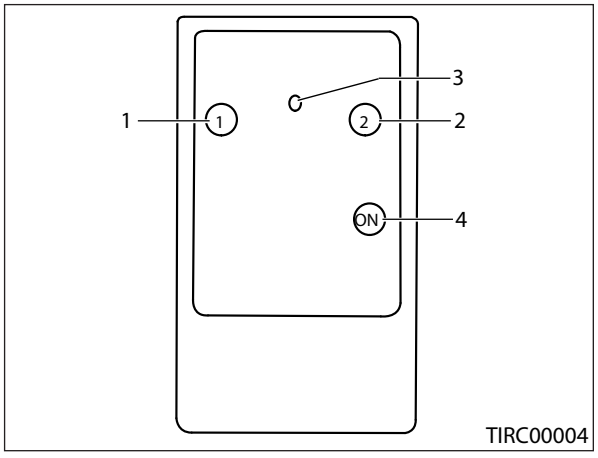

Figure 7.35 - Tipping/Vibrating Grid Remote Control

(d) Programming a New Tipping/Vibrating Grid Remote Control

⚠ CAUTION

The same remote control should not be used to operate more than one system. Ensure each tipping grid has its own remote control

Each remote control transmitter has a unique operating code. If a remote control or receiver box is replaced then the receiver box has to be programmed to recognize the new remote control transmitter.

If a remote control transmitter is taken from one machine or system and used to operate another system, the original receiver box should be disabled by removing the 2 Amp fuse on the printed circuit board (Item 6).

Label the receiver with instructions to reprogram it before putting it back into service into service. Otherwise the situation could arise that on remote control could operate two different systems.

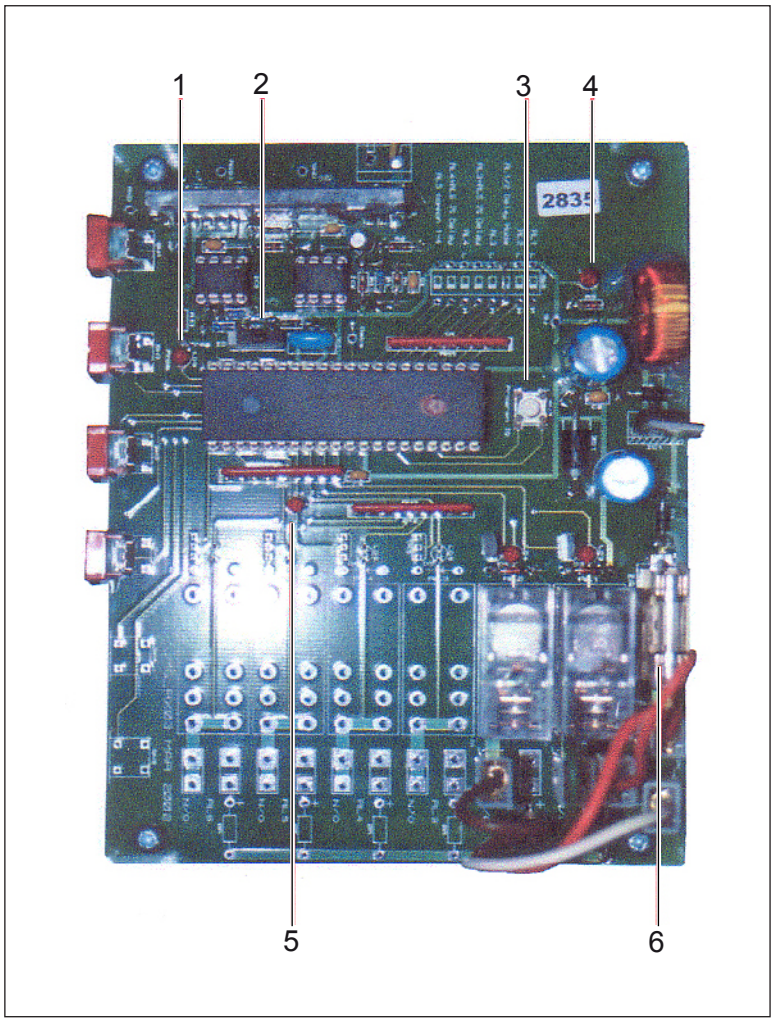

Figure 7.36 - Printed Circuit Board (PCB) of receiver box

(e) Programming the Receiver

NOTICE

Do not hold the remote control closer than 500 mm from the receiver box.

PROCEDURE

1. Observe all safety warnings.
2. Remove the cover from the receiver box by unscrewing the 4 fixing screws (Item 5).

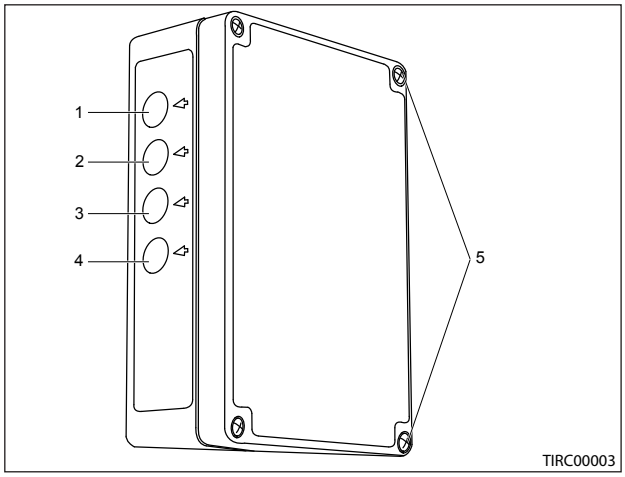

Figure 7.37 - Tipping/ Vibrating Grid Receiver Box

3. Ensure that LED (Item 4) on the PCB is turned on. This LED indicates that the receiver box has a correct power supply.
4. Set the program ID switch (Item 2) to the programming position by moving the switch lever to the left, according to picture's orientation.
5. Press and release the program ID push button (Item 3).

   » The programming LED (Item 1) will turn on.
6. Ensure that the remote control transmitter is turned on.
7. Press and hold any button on the remote control transmitter (except the ON button).

   » LED (1) will turn off and the valid signal LED (Item 5) will turn on.
8. Release the button being held down on the transmitter.
9. Set the program ID switch (Item 2) to the operating position by moving the switch lever to right position according to the pictures orientation.
10. Replace the lid on the receiver box and tighten the 4 mounting screws (Item 5).

(f) Changing the Grid Remote Control Batteries

The remote control battery life depends on its frequency of use. Low batteries are indicated when the LED (Item 3) on the remote control goes dim when a button is pressed and/or the functions do not operate.

When this happens the batteries should be replaced immediately. The batteries consist of 2 x 1.5 volt AAA alkaline batteries located in the rear of the remote control.

NOTICE

Before replacing transmitter batteries turn off the receiver box by disconnecting its power supply.

PROCEDURE

1. Observe all safety warnings.
2. Ensure machine is switched off, tagged out and locked out.
3. Undo the 3 mm screw securing the battery compartment cover at the rear of the remote control.
4. To remove the cover, raise the end adjustment to the belt clip and swing the over and lift off.
5. Remove the exhausted batteries.
6. Fit 2 new AAA size alkaline batteries taking special care to ensure the battery polarity symbols align with the corresponding symbols embossed to the base of the battery compartment. Incorrect polarity may damage the transmitter. Do not mix old and new batteries
7. Refit the cover by engaging the small catches at the bottom edge of the cover with the slots on the lower edge of the battery compartment and then fold the cover towards the belt clip.
8. Secure the cover with the 3 mm screws.

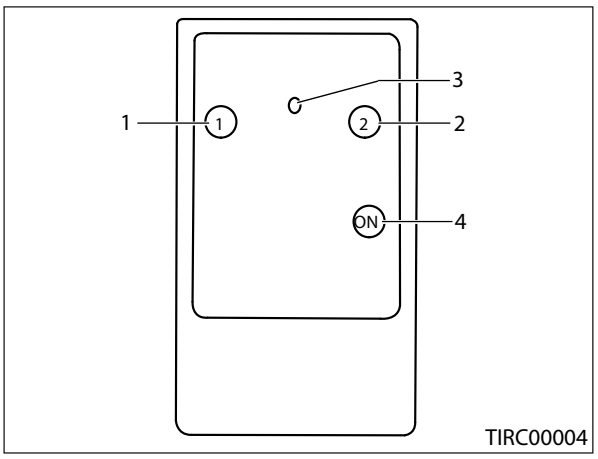

Figure 7.38 - Tipping/ Vibrating Grid Remote Control

(4) Starting the Engine

Electronic Control Panel units

For machines equipped with the electronic control panel the operation, tracking* and tipping grid* controls are the same as those described in Chapter 7, Section Diesel Mode Operation.

* Unless fitted with JMG remote covered previously in this section.

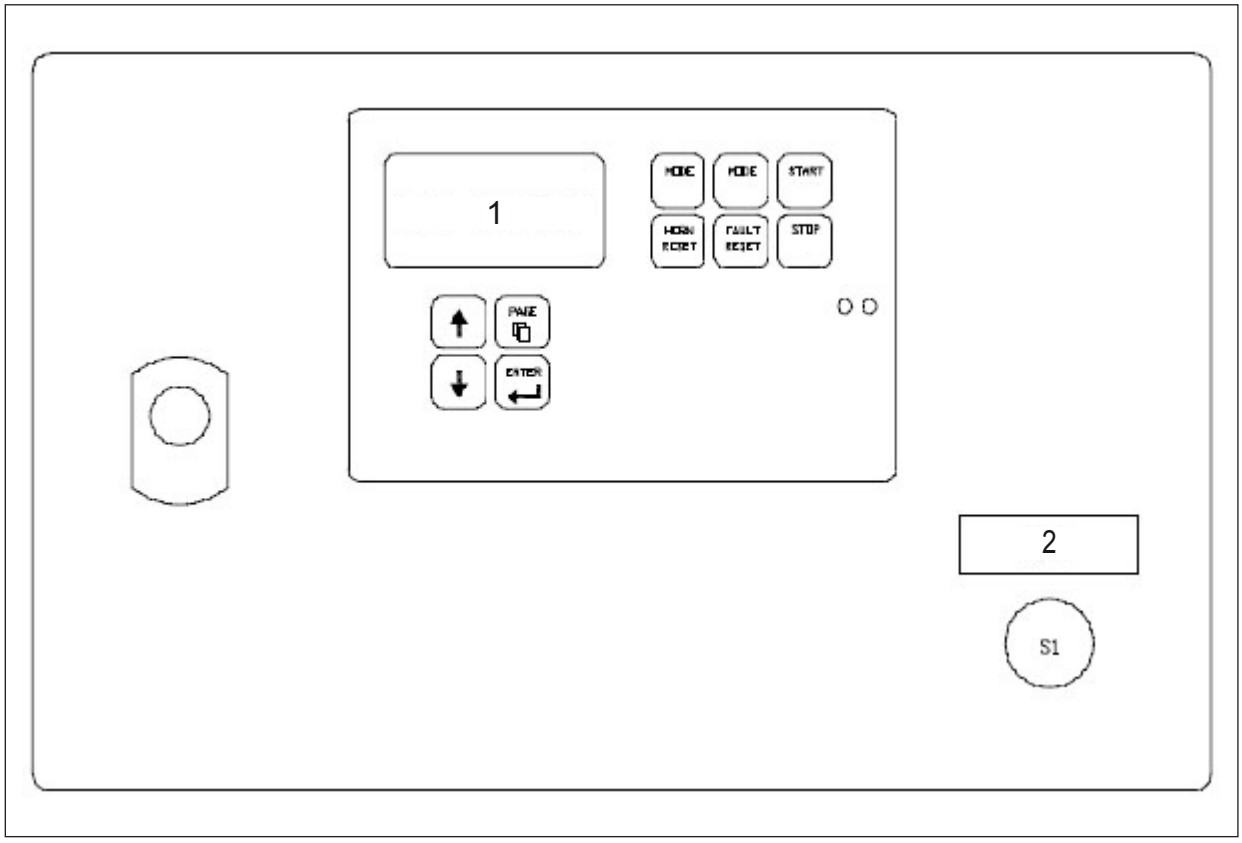

Figure 7.39 - Electronic Control Panel Unit

1 LCD Display

2 Engine ignition switch

7.8 Standard Operation

(1) Putting into Operation

Refer to Chapter 4 for pictorial decal descriptions.

⚠ WARNING

Entanglement Hazard. Keep clear of moving conveyors.

The machine should be put into neutral mode to prevent accidental movement.

NOTICE

The machine must be put into operation in the correct order.

Ensure that there is mesh in the screenbox in all decks when the machine is operational. Should only one of the decks be needed, then an oversize mesh should be fitted to retain the structure of the screenbox, as well as to minimise wear.

The main conveyor will only operate when the screenbox control valve is engaged.

PROCEDURE

1. Observe all safety warnings.
2. Start the machine and gradually increase speed to maximum (1040 RPM).
   - » *In the case of machines fitted with a Constant Speed engine, the engine speed cannot be changed. The engine will run at a constant RPM.*
3. Let the engine run with no load for 3 to 5 minutes.
4. (2 Deck Machines) Move up the side conveyor lever (Item 5) to start the side conveyors. The side conveyors are equipped with a 10 second start delay and warning siren.

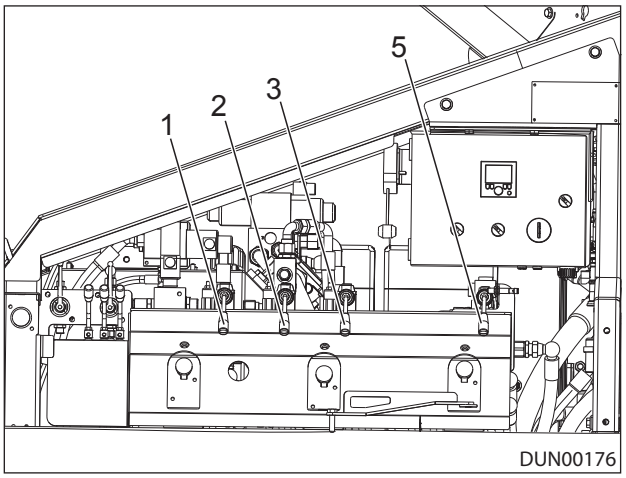

Figure 7.40 - 2 Deck Power Unit

5. (3 Deck Machines) Move up the left hand side and auxiliary conveyor lever (Item 4) to start the conveyors. The left side and auxiliary conveyors are equipped with a 10 second start delay and warning siren. Move up the right hand side conveyor lever (Item 5) to start the right hand side conveyor.

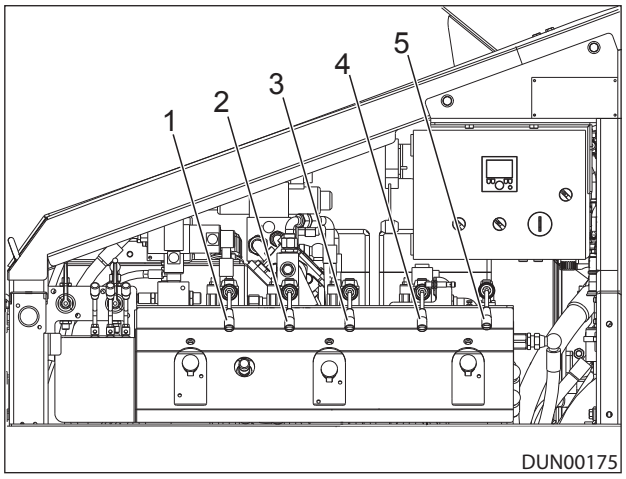

Figure 7.41 - 3 Deck Power Unit

6. Move up the screenbox and tail conveyor lever (Item 3) to start the screenbox and tail conveyor.
7. Move up the main conveyor lever (Item 2) to start the main conveyor and vibrating grid, if fitted.
8. Move up the shredder lever to start the shredder, if fitted (LEVER OPTIONAL).
9. Move up the feeder conveyor lever (Item 1) to start the feeder.
10. To obtain maximum feeder speed, turn the control knob of the feeder variable speed flow control valve (Item 6) counter clockwise.

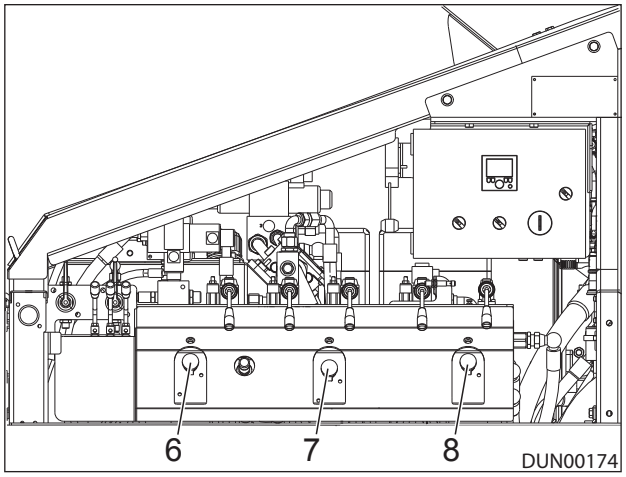

Figure 7.42 - Variable Control Valves

11. Set the side conveyor speeds on the variable speed control (Items 7 and 8), relative to material.
12. Check that all conveyor belts are running in alignment.
13. Turn the control knob of the variable speed flow control valve to level 2.
14. Fill up the feed hopper.
15. Turn the control knob of the correct variable speed flow control valve counter clockwise to increase conveyor speed.
16. Turn the control knob of the correct variable speed flow control valve clockwise to decrease conveyor speed.

17. Re-check that all conveyor belts are running in alignment. If an adjustment is necessary refer to Chapter 9 Maintenance.
18. Check that the screenbox is running and is capable of screening.
19. Re-fill feed hopper.
20. To obtain optimal feeder speed repeat steps 14 to 18 as required.

(2) Screening

⚠ WARNING

Entanglement Hazard

Keep clear of moving conveyors.

NOTICE

Avoid any contact with the shovel, excavator or ramp against the side of the machine.

Initial feed must be low and gradually increased up to normal rate over first few hours of operation.

PROCEDURE

1. Introduce material to the machine at a low feed rate.
2. Gradually increase the feed rate to required capacity.
3. Check the belt pressure on each conveyor.
4. After initial period stop the machine and visually check belts, scrapers, skirting rubbers, rollers and nip guards for abnormal wear and obstructions.
5. Conveyor belts may behave different with material on them, re-tracking may be necessary.
6. Check the quality of the screened material.

7.9 Radio Controlled Tipping/Vibrating Grid

Some machines are fitted with a Radio Controlled Tipping Grid (RTG) or Vibrating Grid.

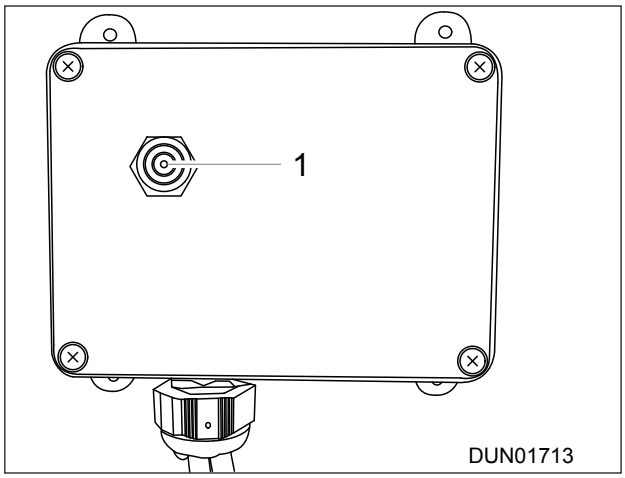

Figure 7.43 - Radio Tipping/Vibrating Grid Receiver

(1) Manual Operation of the Tipping/Vibrating Grid

PROCEDURE

1. To operate the grid without using the Transmitter, the two-position toggle switch (Item 1) on the side of the receiver as shown in Figure 7.43, can be used.
2. Pushing and holding this switch in the UP position will energise the Grid Up solenoid.
3. Pushing and holding this switch in the DOWN position will energise the Grid Down solenoid.

(2) Radio Operation of the Tipping/Vibrating Grid

There are two methods of operating the Grid with the Radio Transmitter, shown below.

- Using a Pre-Stored Programmed Sequence
- Using the Up/Down Sequence Override buttons

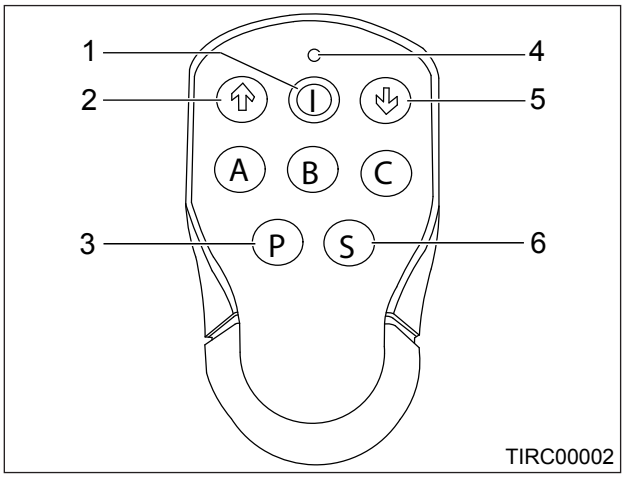

Figure 7.44 - RTG Transmitter

1 On/Off Button

2 Up Button

3 Program Button

4 Status LED

5 Down Button

6 Start/Stop button

(a) Using a Pre-Stored Programmed Sequence

PROCEDURE

1. Press and hold the On / Off button for 2 seconds to turn the transmitter ON.

   » *Once successfully switched on the Status LED will illuminate RED.*

2. If no button is pressed for two minutes or if the On/Off button is pressed and held for two seconds again, the Transmitter will switch OFF to save the battery life.
3. To use a programmed sequence, simply press the Start / Stop button on the RTG transmitter. This will cause the Grid Up solenoid to energise for a programmed time.
4. Once this time has elapsed, the Grid Down solenoid will energise for a programmed time.
5. Pressing the Start / Stop button during this sequence will Pause the sequence. To continue the sequence, press the Start / Stop button again.

(b) Using the Up/Down Sequence Override Buttons

PROCEDURE

1. The Up and Down override buttons as shown can be used to energise the Grid Up and Down solenoids respectively without any pre-programmed time.
2. To do this simply press the Up and Down buttons as required

(c) Setting a New Programmed Sequence

PROCEDURE

1. Ensure the Transmitter is switched ON as detailed above.
2. Press and hold the Program (P) button on the Transmitter. Continue to hold the Program button pressed for the duration of the programming sequence.
3. Press and hold the UP button.
   - » *This will energise the Grid UP solenoid and cause the Grid to Rise. The Status LED will flicker.*
4. When the Grid is at the required height, Release the UP Button, keeping the Program button pressed.
5. Next press and hold the Down button on the RTG Transmitter.
   - » *This will energise the Grid Down solenoid and cause the grid to Lower. The Status LED will flicker.*
6. When the Grid is almost fully down release the Down button.
7. Finally Release the Program button.
8. The above sequence is now stored.
9. Pressing the Start / Stop button will activate the above programmed sequence.

(d) Programming a New Transmitter to an Existing Receiver

NOTICE

If there was another transmitter already programmed to the receiver, it will automatically be erased once a new transmitter is programmed. Only one transmitter can operate the Receiver.

PROCEDURE

1. Ensure that the machine is safe to work on and the engine has been stopped.
2. Open the cover of the receiver by removing the four screws in the lid.
3. Carefully let the lid hang below the main box as the antenna is attached to the lid, exposing the Printed Circuit Board as shown in Figure 7.45.
4. Switch on the transmitter to be programmed.
5. Press and hold the Transmitter Program Button on the Receiver Printed Circuit Board as shown in Figure 7.45, for two seconds.
   - » *The Transmitter Program LED will illuminate Red.*
6. Press any button on the transmitter to be programmed (NOT the On/Off button).
   - » *The Transmitter Program LED will flash.*
7. Press the UP or DOWN button on the transmitter – the respective Relay will activate on the Receiver printed Circuit Board – this will be indicated by the respective Relay LED illuminated RED.
8. Replace cover and process is complete.

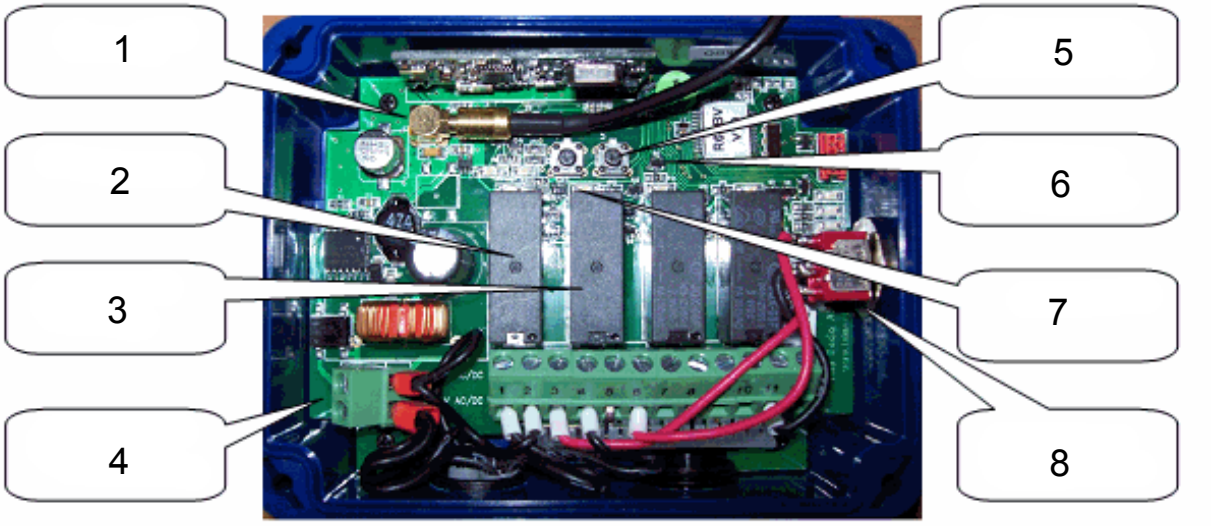

Figure 7.45 - Printed Circuit Board

1 Antenna
2 Grid up relay
3 Grid down relay
4 Power supply connections
5 Transmitter program button
6 Transmitter program LED
7 Relay LED
8 Two position toggle switch

7.10 Operating the Reject Grid

(1) Raising the Reject Grid

⚠ WARNING

Wear personal protective equipment.

NOTICE

The feeder conveyor, control lever must be moved up (working position) before the hydraulic grid will operate.

PROCEDURE

1. Raise the hydraulically operated reject grid by operating the radio transmitter by pointing it in the direction of the radio receiver fitted above the power unit.

(2) Lowering the Reject Grid

The reject grid will lower automatically.

7.11 Operating the Shredder

(1) Raising the Shredder

⚠ WARNING

Wear personal protective equipment.

Fall hazard.

Switch off machine and implement the lockout procedure.

⚠ CAUTION

All control levers must be in the neutral (non-operational) position.

A shredder or any other raised part of the machine can fall, causing serious injuries or death.

Always fit a safety support stay if any part of the machine (such as the shredder chamber) must not be raised for any reason whilst in operation.

Never work under unsupported equipment.

Never work alone.

PROCEDURE

1. Move up the shredder raise/lower control lever to raise the shredder.
2. When the shredder is fully raised, fit and pin the support stays in place to secure the raised position and return lever to neutral position.

(2) Lowering the Shredder

⚠ WARNING

Entanglement Hazard.

Wear personal protective equipment.

⚠ CAUTION

All control levers must be in the neutral (non-operational) position.

PROCEDURE

1. Remove the shredder support stay.
2. Move down the shredder raise/lower control lever to lower the shredder and return lever to neutral position.

7.12 Manoeuvring

⚠ DANGER

DO NOT stand on any of the platforms or ladders of the machine whilst it is being manoeuvred using the remote control handset.

When manoeuvring your machine to its operating position make sure you stand well clear of the machine but are in a position to have all-round vision to see any obstacles, dangers that may lie ahead e.g. personnel, overhead cables, ditches, unsafe roadways etc.

⚠ WARNING

Crush hazard from tracking machine. Ensure that all personnel are clear of moving machine.

Prior to attempting any manoeuvring of the machine the tracks must be free of obstructions, including screened material and fines. Do not push or tow the machine. Failure to observe this warning could result in danger to persons and damage to the machine which may invalidate warranty.

Ensure that the tracks are free of all obstructions including crushed material and fines.

NOTICE

Avoid manoeuvring the machine over extremely uneven ground as damage may occur.

In cold weather conditions before manoeuvring the machine, run the machine for approximately. 10 minutes with the conveyor running, but ensure that it is stopped before manoeuvring.

Ensure that the tracks are free of all obstructions including crushed material and fines.

Before manoeuvring the machine, ensure the feed hopper and screen are empty, and that all materials have run off the conveyors. STOP the feeder, screen unit and product conveyors.

The safety warning horn/siren sounds continuously whilst the machine is being manoeuvred.

It is mandatory to have a Banksman present for any activities where an operators view will be obstructed.

(1) Undercarriage

Terex machinery can be moved in one of two different ways depending on the type of machine;

- Bogie
- Tracks

Each type of undercarriage must be properly maintained to ensure a safe, effective working environment. Track machines are designed for ease of movement around the site and should not be used on public roads. Haulage equipment, such as a low loader or a roll in bogie, should be used for this purpose. Non track machines should be transported using the appropriate haulage equipment.

(2) Tracking the Machine

⚠ DANGER

DO NOT stand on any of the platforms or ladders of the machine whilst it is being manoeuvred. Stand well clear of the machine but be in a position to have all-round vision to see any obstacles or dangers that may lie ahead e.g personnel, overhead cables, ditches, unsafe roadways etc.

NOTICE

Before tracking the machine on site ensure that all material has been processed through it and that no material is left on any belts. Ensure no material has built up around or on the tracks.

Stop the machine for 30 minutes after tracking it continuously for 30 minutes, to allow the components to cool down. Never track the machine constantly for more than 30 minutes without providing adequate rest.

For large tracking manoeuvres or when loading the machine onto a low loader it is necessary to fold in the side conveyors.

When travelling up a gradient, the tracks should be driven forward (i.e. idlers first, drive sprocket to the rear). When travelling down a gradient, tracks should be driven sprocket first. Do not manoeuvre the machine on a gradient steeper than 30 degrees.

The rear support legs must be raised to the transport position before tracking.

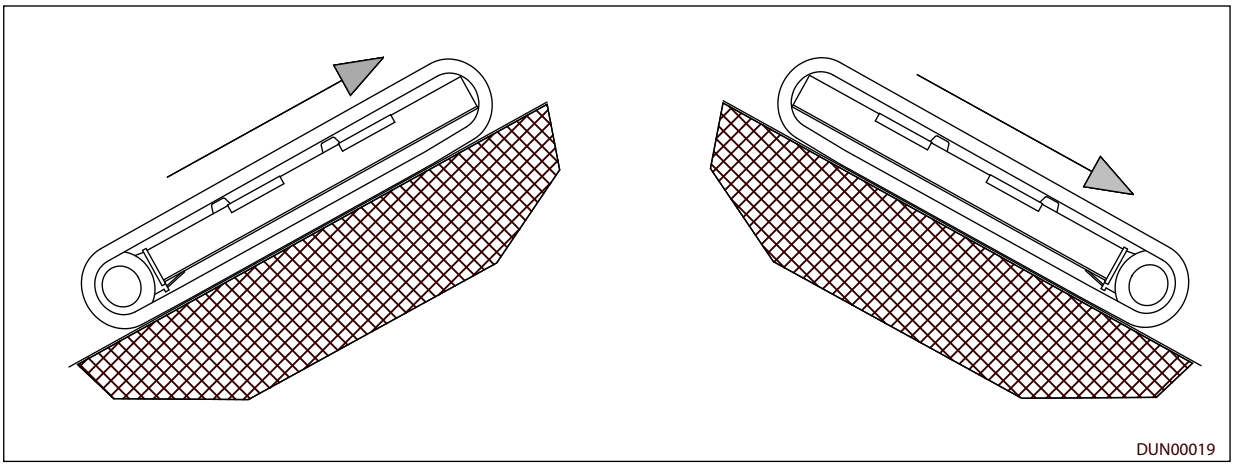

Figure 7.46 - Tracking Uphill and Downhill

Avoid manoeuvring the machine over extremely uneven ground. Ensure the terrain that the machine is working on is firm enough to adequately support the machine.

Always park the machine on flat, level ground. If it is necessary to park the machine on a gradient, the tracks should be solidly blocked.

Never attempt to track the machine if there is any build up of material around the tracks and drive sprockets or if the tracks are frozen to the ground.

Ensure the machine is tracked at least 10 m in either direction on a daily basis, to minimise risk of track chain seizure.

Move all of the control levers to the neutral positions to stop all machine parts prior to manoeuvring.

Ensure no leakage of oil from gearbox, roller and idler before and during tracking.

(3) Machine Tracking Directions

NOTICE

The machine can be tracked using either the umbilical remote tracking unit, the radio tracking unit or the teleradio tracking unit. Familiarize with the controls before tracking the machine.

Familiarize with the machine tracking directions before tracking the machine.

When tracking the machine, at all times the right and the left hand directions are viewed from the feeder end of the machine.

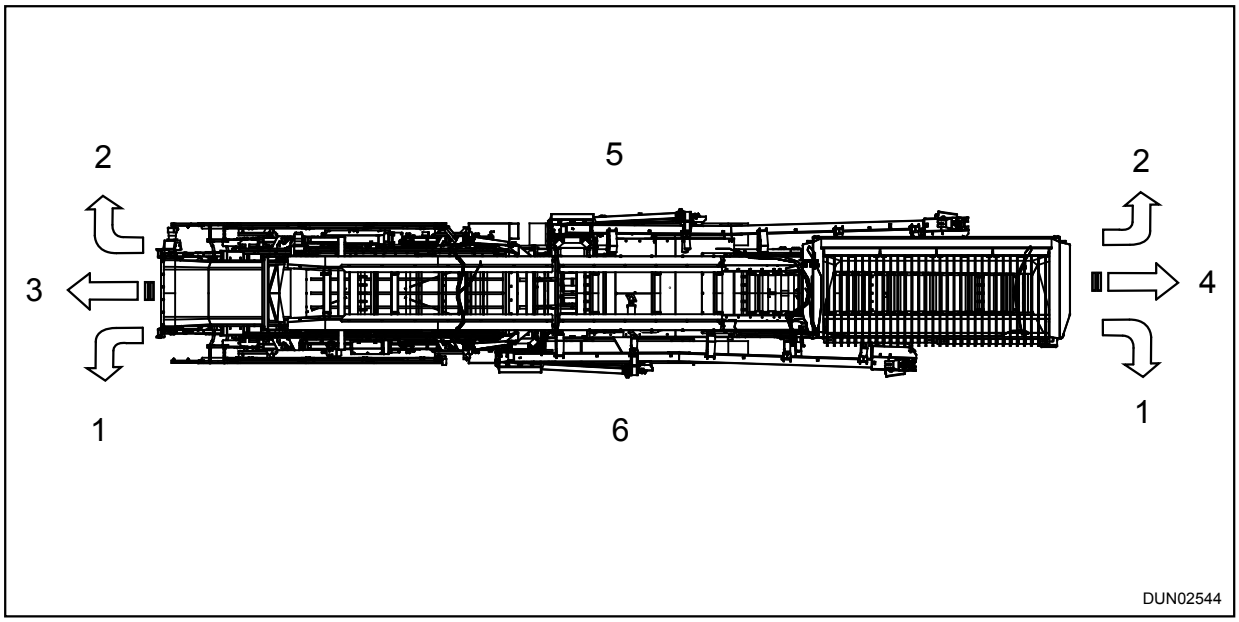

Figure 7.47 - Machine Tracking Directions

The following list identifies the machines directions.

1 Left

2 Right

3 Forward

4 Reverse

5 Right-Hand Side Track

6 Left-Hand Side Track

(4) Tracking

NOTICE

When the Radio Control is ENABLED and the Radio Stop button on the Radio Handset is ACTIVE. Pressing the Radio Stop button at this stage will shut down the machine.

Once the radio control is DISABLED the radio stop button on the radio handset is INACTIVE. Pressing the radio stop button at this stage will have no effect.

The machine can be tracked using either the umbilical remote tracking unit or the teleradio radio remote tracking unit.

(a) Manual Tracking with the Umbilical Handset

PROCEDURE

1. Observe all safety warnings
2. Ensure that the Umbilical is connected correctly to the machine and that the umbilical machine stop is not pressed.
3. Ensure engine is running and all conveyors, feeder etc are OFF.
4. For machines fitted with a Tier 4 Constant Speed engine, turn the Switch on the control panel to enable tracking.
5. Press the Tracks Start button on the umbilical remote (Item 8).

   » *The Led Indicator will illuminate RED. The Siren and Beacon will activate and continue to do so until the Tracks Stop button (Item 7) is pressed.*

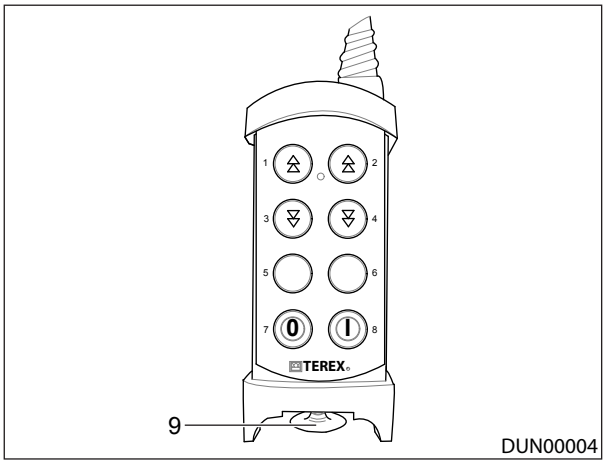

Figure 7.48 - Tracking Umbilical Layout

6. After a period of 10 seconds the LED Indicator will illuminate GREEN.
7. At this stage pressing the various Track direction buttons will engage the respective track solenoid.
8. To stop the Tracking function, simply press the Tracks Stop button on the Umbilical (Item 7).

(b) Radio Tracking with the Teleradio Remote Control

PROCEDURE

1. Ensure engine is running and all conveyors, feeder etc are OFF.
2. Remove the dummy plug and insert the remote control unit plug into it‘s socket at the rear of the machine.
3. Turn the transmitter on using the switch on the back and release the machine stop button (button 7) at the bottom of the transmitter.
4. Hold buttons 5 and 6 until the transmitter beeps indicating the log-in process has begun.

   » The machine siren will sound and there will be a 7 second delay before the tracks can be operated.

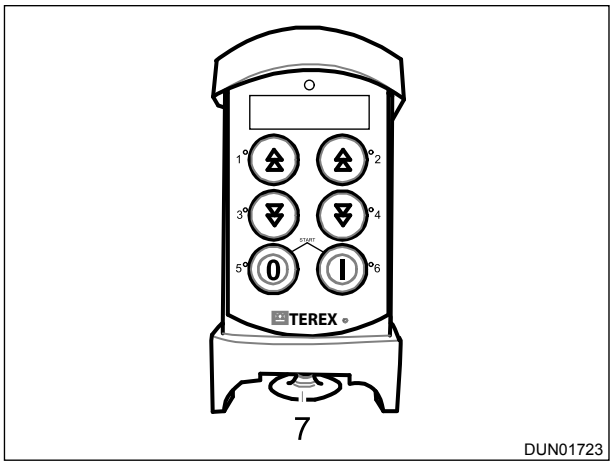

Figure 7.49 - Teleradio Remote Tracking Transmitter

5. Use buttons 1, 2, 3 and 4 to operate the tracks..
6. Move the machine into the required position on the work site.
7. Press button 5 to disable the tracks. Press button 7 to switch off the machine
8. If you have finished with the tracking function, the radio control unit can be disabled by pressing the radio stop button at the base of the radio handset.

(c) Fast Tracking

Some machines are fitted with two-speed tracking systems.

Both the Umbilical Handset and the Radio Handset have two-step push buttons on the Track Directions. The first level is the Normal Track speed. The second press level is the Fast Track Speed.

You cannot slew the machine with Fast Tracks – only both forward or both reverse tracks will engage the fast track function.

(d) Fast Tracking - Constant Speed Engine

Constant Speed machines are fitted with a two-speed tracking system. To engage fast tracking, turn the central dial (Item 1) to the right. The engine speed will not increase during this process.

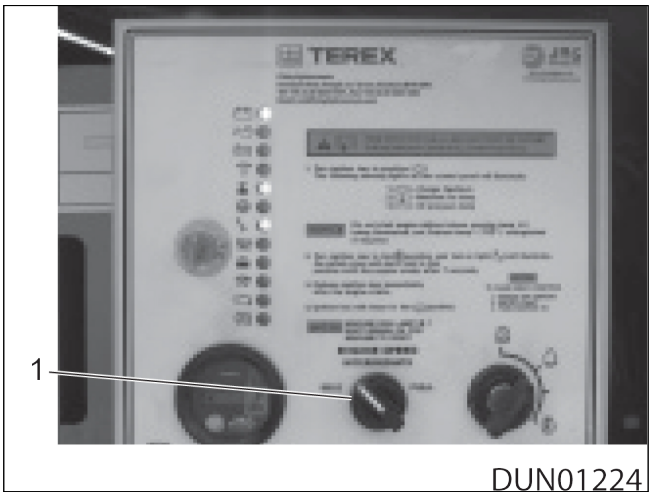

Figure 7.50 - Constant Speed Control Panel

You cannot slew the machine with fast tracking engaged – only both tracks going forward or both tracks reversing together will work with fast tracking engaged.

7.13 Machine Shutdown

(1) Stopping the Machine

NOTICE

When shutting down the machine or carrying out maintenance or adjustment the following procedure must be followed.

Turning all machine components at once causes a pressure spike in the hydraulic circuit and a voltage spike in the electrical circuit both of which are detrimental to the machine. A slight pause between disengaging each component can prevent this spike taking place.

The machine must be running empty of material before the feeder, screenbox and conveyors are stopped in the correct sequence.

⚠ WARNING

Do not hit the emergency stop during this process unless completely necessary.

The battery isolator should not be used to close down the control panel during this period.

PROCEDURE

1. Disengage each machine component in the correct order using the correct control levers.
2. Turn off the machine components in the following order.
   1 Feeder
   2 Shredder
   3 Main conveyor and grid
   4 Tail and screen
   5 2 deck: LHS and RHS conveyors
   3 deck: LHS and auxiliary conveyors
   6 3 deck RHS conveyor
3. Switch off engine and remove ignition key.
4. Engage an emergency stop on the machine.
5. If carrying out maintenance on the machine implement the lockout and tagout procedure.

(2) Tier 4 Final Machine Shutdown

⚠ WARNING

Do not hit the emergency stop during this process unless completely necessary.

The battery isolator should not be used to close down the control panel during this period.

NOTICE

The system DEF must be purged of DEF fluid on engine shutdown to protect the system components from damage due to DEF freezing. For this reason it is important that electrical power is maintained to the engine ECM and after treatment system after the ignition has been turned off. It is therefore important that the machine battery isolator is not turned off until the system purge has been completed and the battery disconnect light is off. There is a minimum purge time of 2 minutes. *The engine ECU records every time the engine is isolated before the wait to disconnect light has gone out.*

PROCEDURE

1. Observe all safety warnings.
2. Stop all hydraulic components in the correct sequence.
3. Switch the engine speed switch (Item 3) to low.
4. Let the engine idle with no load for 3 to 5 minutes.
5. Turn the ignition key (Item 2) to the off position to stop the engine and remove the key.

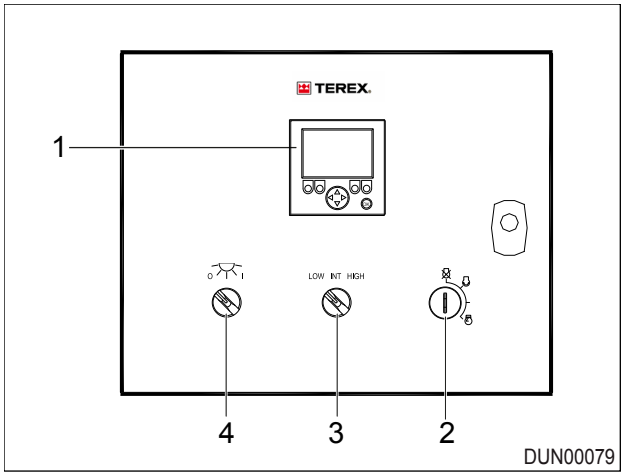

Figure 7.51 - MCU 300 Control Panel

6. Engage an emergency stop on the machine.
7. Before carrying out maintenance on the machine ensure the battery disconnect light is off.

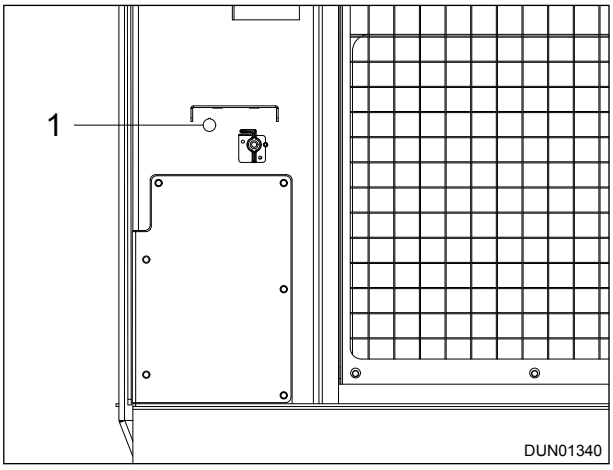

Figure 7.52 - Battery Wait to Disconnect Light

Figure 7.53 - Battery wait to Disconnect Decal

» *When battery disconnect light is ON do not isolate battery. When battery disconnect light is OFF battery can be isolated.*

8. Implement the lockout and tagout procedure, Reference: Chapter 8.

(3) Tier 3 Constant Speed Shutdown

PROCEDURE

1. Observe all safety warnings.
2. Stop all hydraulic components in the correct sequence.
3. Let the engine run with no load for 3 to 5 minutes.
4. Turn the ignition key to the off position to stop the engine and remove the key.
5. If the radio remote control, if fitted, has been in use switch it off by depressing the stop button
6. Engage an emergency stop on the machine.
7. If carrying out maintenance on the machine implement the lockout and tagout procedure, Reference: Chapter 8.

(4) Tier 3 Diesel Machine Shutdown

NOTICE

For normal closing down of the machine, DO NOT use the emergency stop buttons [or, if fitted, radio remote control stop buttons] or by switching off the engine ignition to close down the machine. Always follow the correct preparation sequence.

The feeder, screenbox and conveyors must be emptied and stopped in the correct sequence before the machine is shut down.

PROCEDURE

1. Observe all safety warnings.
2. Stop all hydraulics.
3. Set the engine at its slowest speed.
4. Let the engine idle with no load for 3 to 5 minutes.
5. Turn the ignition key to the off position to stop the engine and remove the key.
6. If the radio remote control, if fitted, has been in use switch it off by depressing the stop button.
7. Engage an emergency stop on the machine.
8. If carrying out maintenance on the machine implement the lockout and tagout procedure, Reference: Chapter 8.

(5) Tier 3 Dual Power machine shutdown

(a) Diesel Mode

The diesel mode dual power hydraulics operate as any other diesel machine.

PROCEDURE

1. Firstly stop all hydraulics.
2. Set the engine to its lowest speed.
3. Then stop the engine which is carried out by the large electrical panel, the small panel within the power unit is not present on dual power machinery.
4. On dual power units stop the machine / diesel engine via the key switch on the large electrical panel also needs to be switched from Diesel to off.

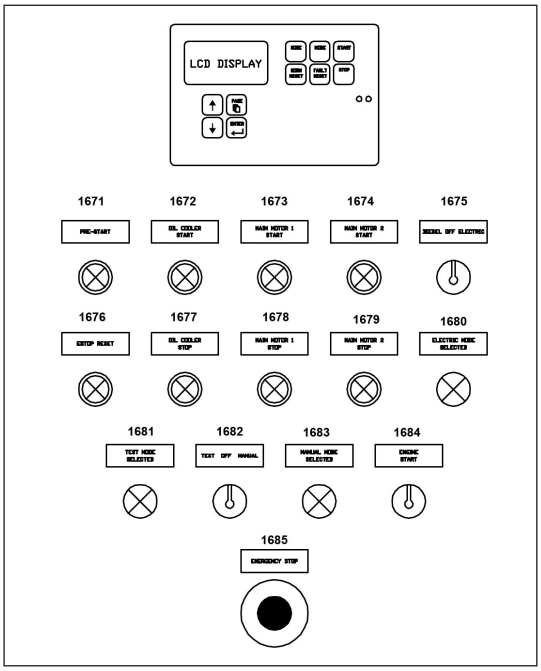

Figure 7.54 - Dual Power Electrical Panel (Panels can vary)

(b) Electrical Mains Power Mode:

To shutdown the machine from three phase supply electrics the sequence of the electrical mode as follows:

PROCEDURE

1. Firstly stop all hydraulics.
2. Stop motor 2 by pressing motor 2 stop button on the panel front.
3. Stop motor 1 by pressing motor 1 stop button on the panel front.
4. Stop the oil cooler by pressing oil cooler stop button on the panel front.
5. Main isolator must be switched to the off position.
6. Set the key switch on the large electrical panel from electric selection to the off selection.

(6) Electric Hydraulic Machine Shutdown

Electrical mains power mode. To shutdown the machine from three phase supply electrics the sequence of the electrical mode as follows:

PROCEDURE

1. Firstly stop all hydraulics.
2. Stop Motor 2 by pressing Motor 2 stop button on the panel front.
3. Stop Motor 1 by pressing Motor 1 stop button on the panel front.
4. Stop the oil cooler by pressing oil cooler stop button on the panel front.
5. Main isolator must be switched to the off position.
6. Set the key switch on the large electrical panel from electric selection to the off selection.

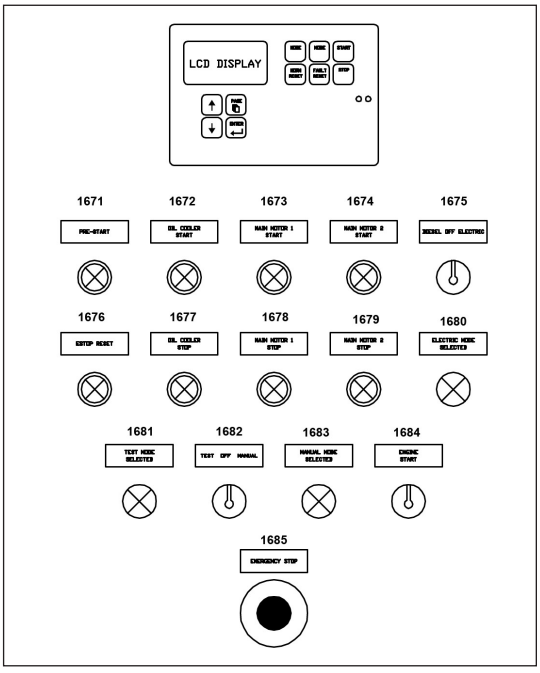

Figure 7.55 - Electric Hydraulic Electrical Panel (Panels can vary)

Intentionally Left Blank

Table of Content

8 Emergency Operating Procedures 8-2
8.1 Lockout and Tagout 8-2
(1) Before Carrying out any Work on the Machine 8-2
(2) After Carrying out any Work on the Machine 8-4
8.2 Emergency Stop 8-5
(1) Emergency Stop Locations 8-6
8.3 Restarting after Emergency Stop 8-7
8.4 Testing Emergency Stops 8-7

8 Emergency Operating Procedures

8.1 Lockout and Tagout

This procedure is designed to prevent injuries caused by the unexpected start-up or movement of a machine. These procedures are to be followed every time a machine is to be cleaned, maintained, adjusted or repaired. When used as intended, Lockout also protects personnel from energy stored in devices such as springs, accumulators, batteries, hydraulic systems, etc.

Where the lock out and tagout symbols (Reference: Chapter 4) appear on a safety sign it indicates that the machine must be switched off and locked out before any work is carried out.

⚠ WARNING

Never give your key to anyone else and where more than one person is working on the equipment they must fit their lock also.

(1) Before Carrying out any Work on the Machine

NOTICE

Depending on the type of machine, there can still be several kinds of energy remaining after the power is turned off. Secondary energy sources are hydraulic (fluid under pressure), pneumatic (air under pressure), kinetic (force of moving parts) and potential (force contained in weights that have been raised).

If the machine will not be used for periods longer than 24 hours, the machine must be locked out and tagged out until further use is required.

After key off the isolator switch must remain in the “ON” position for a minimum of 20 seconds to allow all systems to shut down properly.

PROCEDURE

1. Observe all safety warnings.
2. Turn off the engine at the starter panel and remove the key.
3. Lock the panel and put the key in a safe place.

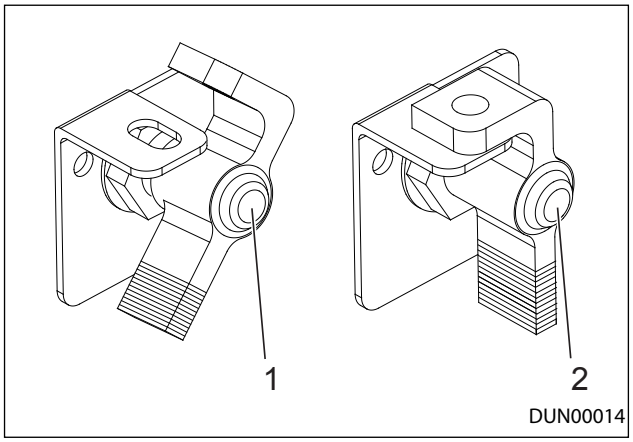

Figure 8.1 - Isolator Switch

4. After 20 seconds, rotate the isolator switch from the “ON” position (Item 1) to the “OFF” position (Item 2).

   » *For machines fitted with Battery Wait to Disconnect Light, the machine must not be isolated until the Battery Wait to Disconnect Light is OFF.*

5. Fit the lock out hasp (Item 5) and unique padlock (Item 4) on the isolator switch. Keep the key to make sure the lock can not be removed and the power can not be turned back on.
6. Place a Tag (Item 3) on the lock that identifies the machine operator. The operator must be identified by name, picture or number as well as the date and time the machine was locked out.

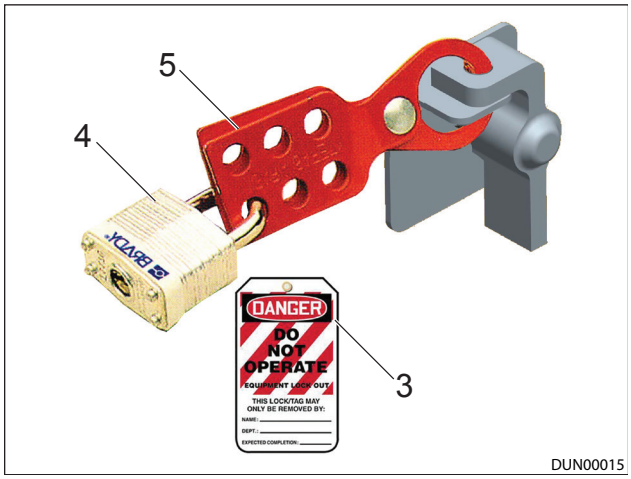

Figure 8.2 - Isolator Switch Off, Locked and Tagged

7. Release stored energy from the system, so that the machine is in a zero energy state.
8. Try to start or activate the machine to make sure that the power is off. (Don’t forget to push the stop button again, afterward.)

The next steps of the procedure are for Dual Power machines only:

9. Locate the dual power control panel.

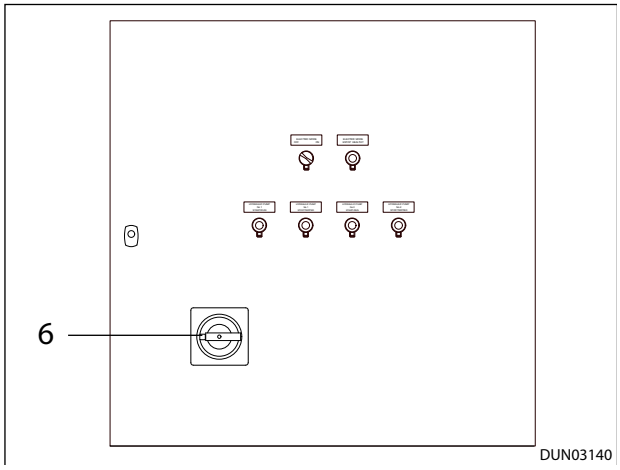

Figure 8.3 - Dual Power Control Panel (control panels may vary)

10. Turn the dual power isolator switch (Item 6) to the off position and pull out the lock out tab (Item 7).
11. Fit a lock out hasp (Item 8) and unique padlock (Item 9) on the dual power isolator switch. Keep the key to make sure the lock can not be removed and the power can not be turned back on.

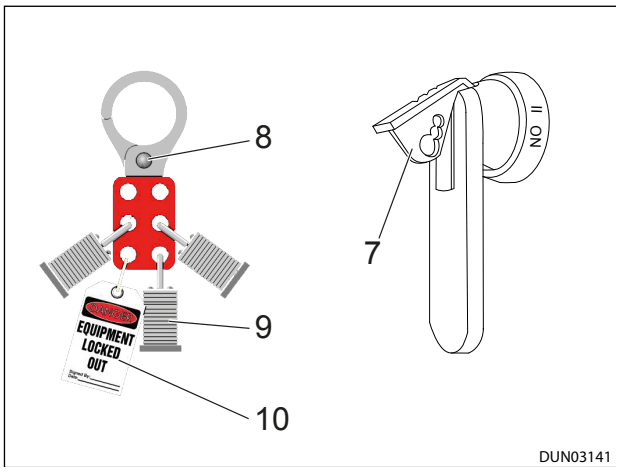

Figure 8.4 - Dual Power Isolator Switch

12. Place an identity tag (Item 10) on the lock that identifies the machine operator. The operator must be identified by name, picture or number as well as the date and time the machine was locked out.
13. Try to start or activate the machine to make sure that the power is off. (Don't forget to push the stop button again, afterward.

(2) After Carrying out any Work on the Machine

PROCEDURE

1. Secure the work area by replacing guards and shields, removing blocks, picking up tools and inspecting the work area.
2. Remove the lock and tag from the isolator switch.

   » *If applicable, remove the lock and tag from the dual power isolator switch.*
3. If there are no other locks on, turn the isolator switch to the ON position.

   » *If applicable, turn the dual power isolator switch to the ON position.*
4. Unlock the operator's control panel.
5. Warn others before starting the machine.
6. Start the machine and begin work.

8.2 Emergency Stop

⚠ WARNING

The stop button on the remote radio control, if fitted, is NOT an emergency stop as it may not be operative at all times. When an emergency stop has been initiated, the ignition switch stays on. Do not attempt to restart the engine until it is safe to do so.

Do not hit an emergency stop button unless it is an emergency. Repeated use of the emergency stop button could cause damage to the engine. The engine ECU records every time an emergency stop button is used to stop the machine.

NOTICE

In an emergency situation stop the machine by pressing an emergency stop button on the machine.

PROCEDURE

1. Press any emergency stop to stop the engine and machine.
   » The safety alarm will sound until it is acknowledged and cancelled.
2. Turn the ignition key to the off position as soon as possible, if safe to do so.
3. Remove the ignition key.
4. Set the isolator switch too the off position.
   » If applicable, turn the dual power isolator switch to the off position.
5. When safe, release the emergency stop button(s) by pulling or twisting.

(1) Emergency Stop Locations

Emergency stops are located at both the left hand side and right hand side of the machine.

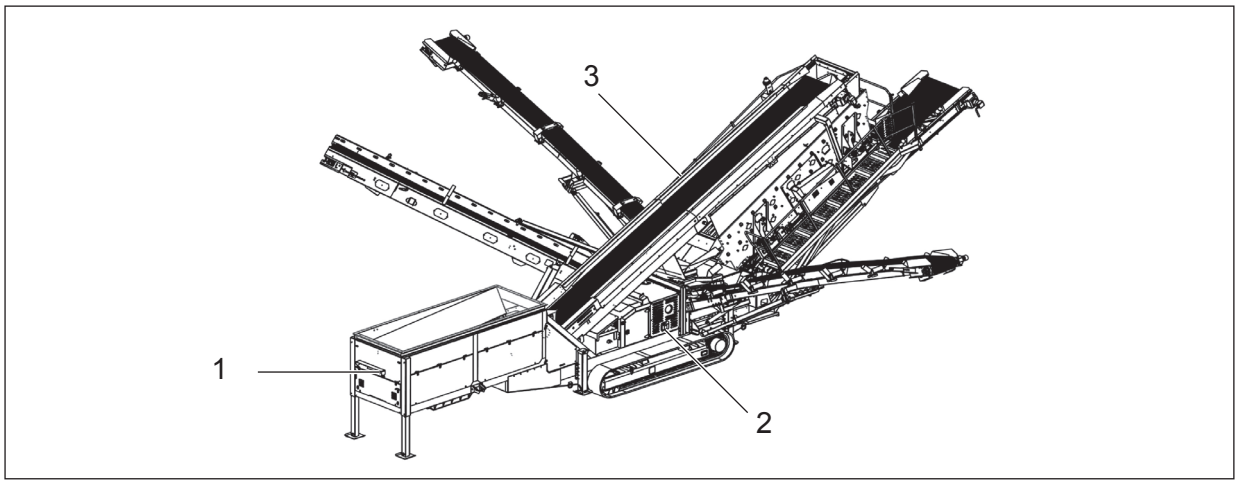

Figure 8.5 - Emergency Stop Locations Dry Option

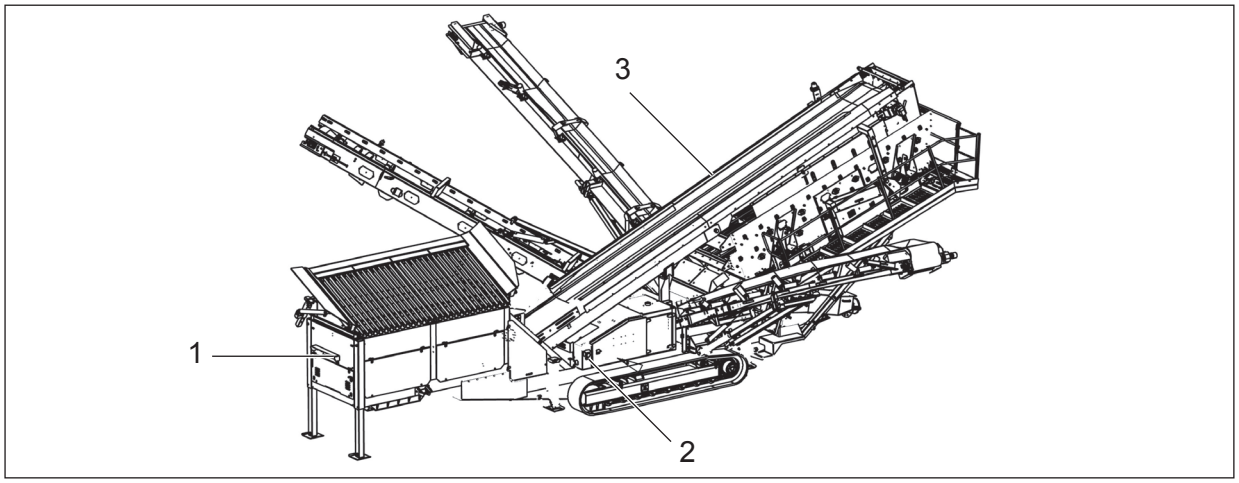

Figure 8.6 - Emergency Stop Locations Rinser Option

8.3 Restarting after Emergency Stop

⚠ WARNING

Ensure that the problem has been solved and all personnel are clear of the machine. Before restarting, ensure that all guards are correctly fitted and fully functional. Do not restart until it is safe to do so.

NOTICE

The machine must not be restarted if there is any material in and/or on the machine. Ensure there is no material in and/or on the machine before restarting.

PROCEDURE

1. Release the emergency stop button(s) by pulling or twisting.
2. Restart the machine, Reference: Chapter 7.

8.4 Testing Emergency Stops

NOTICE

The machine must not be restarted if there is any material in and/or on the machine Ensure there is no material in and/or on the machine before restarting.

PROCEDURE

1. Start the engine.
2. Push in an emergency stop button.

   » The engine will stop, the safety alarm will sound and alarm messages are shown on the display screen..
3. Acknowledge the alarm.
4. Re-set the emergency stop by pulling or twisting, depending on the type fitted.
5. Turn the ignition key to the ‘Off’ position.
6. Turn ignition key to the first position again.
7. Wait for the pre-start warning to complete.
8. Turn ignition key to start the engine again.
9. Repeat the procedure for all other emergency stops.

Intentionally Left Blank

Table of Content

9 Maintenance 9-4
9.1 Safety Before and During Maintenance 9-4
9.2 Regular Servicing 9-6
9.3 Non Scheduled Maintenance 9-7
(1) Air Cleaner Elements 9-7
(2) Tracks 9-7
(3) Control Systems 9-7
9.4 Maintenance Schedule 9-8
9.5 Service Schedule 9-12
9.6 Lubrication 9-15
(1) Recommended Lubricants 9-16
(2) Capacities - Fluid 9-19
(3) Greasing Schedule 9-20
9.7 Feeder Unit Maintenance 9-21
(1) Clean and Check the Conveyor Belt 9-21
(2) Tensioning the Feeder Conveyor Belt 9-22
(3) Feeder Conveyor Alignment 9-23
(4) Changing the Feed Conveyor Gearbox Oil 9-24
9.8 Screen Unit Maintenance 9-25
(1) Checking Screen Drive Belt Tension 9-25
(2) Tensioning the Screen Drive Belt 9-27
(3) Changing the Screen Mesh 9-28
(4) Re-Tuning the Screen Unit 9-32
(5) Snubber Rubber Maintenance 9-32
9.9 Conveyor Maintenance 9-34
(1) Clean and Check the Conveyor Belt 9-34
(2) Belt Tracking 9-35
(3) Tensioning Conveyor Belts 9-36
(4) Conveyor Alignment 9-37
9.10 Hydraulic System 9-38
(1) General 9-38
(2) Oil Tank, Pipes & Fittings 9-39
(3) Hydraulic Fluids 9-39
(a) Check Hydraulic Oil Level 9-41
(b) Adding Hydraulic Fluid 9-42
(c) Change Hydraulic Oil 9-42
(d) Changing Suction Filters 9-44
(e) Checking the Return Line Filter 9-46
(f) Changing the Return Line Filter 9-47
9.11 Hydraulic Ram Maintenance 9-48

9.12 Tier 3 and Constant Speed Engine Maintenance....9-49
(1) Changing Engine Filters & Oil....9-50
(a) Checking Engine Oil....9-50
(b) Changing Engine Oil & Filter....9-51
(2) Changing Fuel Filters....9-52
(a) Draining the Fuel Filter Water Trap....9-52
(b) Changing Watertrap Filter....9-53
(c) Changing the Fuel Filters....9-54
9.13 Tier 4 Engine Maintenance....9-55
(1) Changing Engine Oil & Filters....9-56
(a) Checking Engine Oil....9-56
(b) Changing Engine Oil & Filter....9-57
(2) Changing Fuel Filters....9-58
(a) Draining the Fuel Filter Water Trap....9-58
(b) Changing Watertrap Filter....9-59
(c) Changing the Fuel Filters....9-60
(3) Servicing The DEF (Diesel Exhaust Fluid) System....9-61
(a) DEF Tank Location....9-61
(b) Changing the Pump Main Filter....9-62
(c) Changing the DEF Tank Filler Screen....9-63
(d) Changing the DEF Manifold Filter....9-64
(e) DEF Tank Flush....9-66
(f) Filling the DEF Tank....9-67
9.14 Inspecting the Clean Emissions Module Supports....9-69
9.15 Changing Air Filters....9-70
(1) Air Filtration....9-70
(2) Check Both Air Cleaner Elements....9-70
(3) Changing the Air Cleaner Elements....9-71
9.16 Coolant System....9-72
(a) Engine Coolant Level....9-72
(1) Topping up Coolant Level....9-73
9.17 Priming the Fuel System....9-74
(1) Electric Fuel Pump Priming....9-74
(2) Manual Fuel Pump Priming....9-75
(3) Fuel System Prime (Tier 3 CAT4.4 83KW Mechanical Engines)....9-76
9.18 Fuel Level and Topup....9-78
9.19 Track Maintenance....9-80
(1) Machine Tracks....9-82
(2) Cleaning the Tracks....9-82
(3) Measuring Track Tension....9-83
(4) Adjusting Track Tension....9-84
(5) Checking and Filling the Gearbox Oil Level....9-85
(a) Draining Gearbox Oil....9-86
(b) Refilling the Track Gearbox Oil....9-87
(c) Changing Track Gearbox Oil....9-88

9.20 Electrical Maintenance 9-89
(1) Electrical Safety instructions.....9-89
(2) Check the Battery 9-90
(3) Battery Removal 9-91
(4) Battery Installation 9-91
(5) Changing Fuses 9-92

9 Maintenance

9.1 Safety Before and During Maintenance

⚠ WARNING

Practice safe maintenance. Read and understand the operators manual before doing any work.

⚠ CAUTION

Maintenance should only be carried out by trained and qualified personnel.

PROCEDURE

1. Whenever maintenance or service is being carried out a minimum of two (2) persons should be present at all times. NEVER WORK ALONE.
2. When performing maintenance tasks, always observe the local site safety rules or as provided in the safety section of this manual.
3. Prepare yourself. Wear a hard hat, safety goggles, hearing protection and other protective equipment as required by job conditions. Do not wear loose clothing or jewelry that can catch on controls or moving parts. Long hair must be tied back.
4. Prepare the machine. Move the machine onto a level surface and apply parking brakes and/or wheel chocks. Shut off the engine and remove the key. Relieve all hydraulic pressure by returning controls to neutral. Secure all hydraulically operated attachments with pins provided.
5. Isolate all electrical supplies to the machine before starting any maintenance work.
6. Never attempt repairs or adjustments to the machine while it is running.
7. Remove only guards or covers that provide access. Wipe away excess grease and oil.
8. Never leave guards off or access doors open when unattended. Keep bystanders away if access doors are open.
9. When working beneath raised equipment, always use blocks, jack-stands or other rigid and stable supports. Never work under unsupported equipment.
10. When working at height make sure you take all necessary precautions in line with local regulations and use approved PPE, safety harnesses and work platforms. If you are not aware of working at height requirements speak to your manager before starting any work. Keep all handles, steps, handrails, platforms, landing and ladders free from dirt, oil, snow and ice
11. Never operate any type of engine without proper ventilation – EXHAUST FUMES CAN KILL. (See Electrical and Engine Safety for more detailed checklist).
12. Checking for hydraulic leaks. Beware hydraulic fluid under pressure can penetrate the skin or damage eyes. Fluid leaks under pressure may not be visible. Use a piece of cardboard to find leaks but do not use bare hand.
13. Wear safety goggles for eye protection. If fluid enters skin or eye, get immediate medical attention. (See Hydraulic Safety for more detailed checklist).
14. Clean or replace damaged, missing or painted over safety signs that cannot be read.
15. Rotating and moving parts must be inspected during maintenance and replaced if cracked or damaged. Excessively worn or damaged parts can fail and cause injury or death.

16. After maintenance, tighten all bolts, fittings and connections. Install all guards, covers and shields. Replace or repair any damaged ones. Refill and recharge pressure systems with recommended fluids. Start the engine and check for leaks. Operate all controls and make sure the machine is functioning properly. After testing, shut down, check the work you performed (any missing cotter pins, washers, locknuts, etc.)? Recheck all fluid levels before releasing machine for operation.
17. NEVER make any modifications, additions or conversions which might affect safety without the supplier's approval.
18. To prevent any burns or scalds allow the hydraulic oil to cool down before carrying out any maintenance tasks (approximately 3 hours).

9.2 Regular Servicing

Refer to Chapter 2 Safety for relevant safety information before attempting to carry out any maintenance on the machine.

Maintenance procedures in the maintenance section of this operations manual are intended to be carried out by trained operators. You must satisfy yourself that you have received to the correct training before attempting any procedure in the maintenance section, if you have any doubts do not attempt any procedure and speak to your manager. More complex machine maintenance that is not covered in the maintenance section of the operators manual must only be carried out by fully trained service personnel who have taken part in specific maintenance training provided by us or our approved dealer, please contact your local dealer for further details.

⚠ WARNING

Before undertaking any maintenance, repairs or retooling work on the machine, switch off the machine and implement the lockout and tagout procedure.

Additionally, the operator should always consider what particular safety hazards could occur at specific operating sites and take steps to eliminate them before commencing work.

NOTICE

Failure to carry out scheduled maintenance or exercise due care may invalidate any warranty that might apply.

It is important that a strict routine of regular servicing is undertaken from the start of operation of the machine. Keep records.

To deliver the specified quantity of grease to bearings, ascertain the amount the grease gun delivers with each ‘pump’. Do not guess or assume an amount! Check the greasing equipment used regularly. To prevent contamination of the grease, wipe the grease nipples clean before applying the grease gun.

It is bad practice to mix oils or greases. The blend can have a lower specification than the individual oils or greases and can lead to premature bearing failure. USE ONE BRAND/GRADE/SPECIFICATION ONLY.

It is the operators responsibility to ensure that all bearings are greased with the correct quantity and type of grease/oil at the correct intervals specified.

Never lubricate, clean, service, or adjust the machine while it is moving.

Regular checks on fluids and the lubrication of the machine, in accordance with the schedule, is essential.

In addition to the lubrication points, the lubrication schedule lists the regular attention required to the machine hydraulic system. The hydraulic system as a whole should not be neglected from regular inspections for damage or leaks.

If applicable, the engine oil and coolant also require checking regularly.

When power or steam cleaning the machine be aware of the risk of damaging components i.e., electrical components , bearings. Water ingress or heat may penetrate or damage seals leading to premature failure.

Remove any buildup of stones, dust, grease, oil, or other debris from the machine.

9.3 Non Scheduled Maintenance

⚠ WARNING

Wear personal protective equipment.

Switch off machine and implement the lockout procedure.

(1) Air Cleaner Elements

The life span on air cleaner elements is dependant on the environment the machine is used in and as such a maintenance schedule can not be implemented for their replacement. Terex machines are equipped with an air filter restriction sensor which will highlight the need for maintenance. We recommend that air cleaner elements are replaced and not washed or reused.

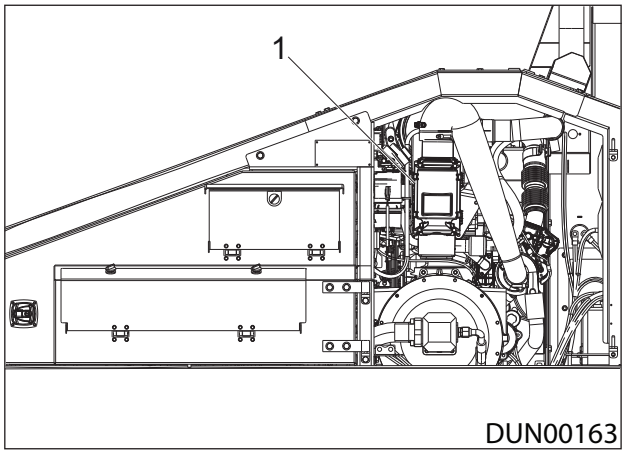

Figure 9.1 - Air Cleaner Element

(2) Tracks

The maintenance schedule for the tracks will depend greatly on the amount of travel a machine is expected to do in its day to day operation and for that reason is not included in the following hourly schedules. Before any attempt is made to move this machine refer to the Tracks Maintenance section of this manual.

(3) Control Systems

Ensure that only qualified and trained personnel operate and maintain this equipment

Always keep control panels closed to avoid water ingress and dust contamination and keep keys in secure locations.

Regularly check the control system and connections for any damage.

Never adjust any components or settings without authorisation from Terex.

9.4 Maintenance Schedule

NOTICE

Periodic maintenance inspections must be performed on the machine to help ensure peak performance and prevent premature down time. This section gives lists of recommended items to be checked on a periodic basis. When the machine is operated in extreme conditions (for example below —5°C or above 30°C) or in dusty conditions for a long time, the maintenance schedules change.

The time periods stated in this section are of a general nature and are intended for guidance only. It is the responsibility of the individual site maintenance department to determine the timings of service items. These timings are dictated by the actual working environment of each piece of equipment.

Failure to carry out scheduled maintenance or exercise due care invalidates any warranty that applies.

Ask your local Terex dealer or Terex technical department for advice.

General	Job	10 Hours (Daily)	50 Hours (Weekly)
Emergency stop system	Check / Repair	✓	
Decal either missing or damaged	Check / Replace		✓
Diesel level in fuel tank	Check / Refill	✓	
Material build up	Check/ Clean	✓	
Electrical defects	Check / Repair		✓
Safety guards are in place	Check / Replace	✓	
Loose parts, nuts, bolts & pins	Check / Tighten	✓	
Grease Filled Bearings	Grease		✓
Battery Electrolyte Level	Check		✓

Hydraulic System	Job	10 Hours (Daily)	50 Hours (Weekly)
Hydraulic oil level	Check / Top up	✓	
Hydraulic return line filter indicator	Check	✓	
Hydraulic hoses for leaks	Tighten / Replace	✓	
Hydraulic cylinders for leaks	Tighten / Replace	✓	
Hydraulic pumps for leaks	Tighten / Replace	✓	
Hydraulic motors for leaks	Tighten / Replace	✓	
Conveyors			
Conveyor belts for rips and tears	Check / Repair	✓	
Belt alignment	Check / Align	✓	
Direct drive motor coupling (if applicable)	Check / Replace		✓
Belt Scraper	Check / Adjust / Replace		✓
Rollers are free moving and unobstructed	Check /Free	✓	
Skirting rubbers - tension and spillage	Check / Adjust / Replace		✓
Obstruction to drums	Check / Remove		✓
Drum bearings	Grease		✓
Gearbox bolts	Check / Tighten		✓
Feeder Hopper			
Skirting rubbers	Check / Adjust/ Replace		✓
Feeder gearbox oil**	Change		✓
Belt cleaners	Check / Adjust		✓

Screenbox	Job	10 Hours (Daily)	50 Hours (Weekly)
Screen mesh - wear	Check / Replace	✓	
Screen mesh - tension	Check / Tighten	✓	
Tensioner Sleeve	Check / Replace		✓
Bearings	Grease		✓
Springs	Check / Replace	✓	
Rubber cushions	Check / Replace	✓	
Snubber Rubbers*	Check/Adjust		✓
Parameters (speed & throw)	Check / Set	✓	
Screen Blanket	Check / Replace	✓	
Screen Drive Belt	Check Adjust / Replace		✓
Tracks			
Loose nuts and bolts	Check / Tighten	✓	
Lower roller oil leakage	Check / Repair	✓	
Damage to track links, pins and track shoes	Check / Repair	✓	
Tension of tracks	Check / Repair		✓
Material build up	Clean / Check	✓	
Track for oil leaks	Check / Tension		✓
Run Machine Forwards and Backwards 10 m	Perform	✓	
Dual Power Electric Motors			
Keep the motor clean and ensure free ventilation airflow	Inspect / Clean		✓
Shaft Seal	Check / Replace		✓

*Ensure Snubber Rubbers maintain a 5 mm gap from the screenbox

**After first 50 hours then after every 2000 hours or annually.

Engine	Job	10 Hours (Daily)	50 Hours (Weekly)
Engine Oil Level	Check / Top up	✓	
Battery Electrolyte Level	Check / Top up		✓
Alternator Belt	Check / Adjust / Replace	✓	
Engine Air Cleaner Service Indicator	Check	✓	
Engine Air Precleaner	Check / Clean	✓	
Hoses and Clamps	Check / Replace	✓	
Fuel Tank Water and Watertrap	Drain		✓
Fuel Tank Breather / Cap	Check / Clean	✓	
Fuel System Primary Filter / Water Separator	Drain	✓	
Cooling System Coolant Level	Check	✓	
Driven Equipment	Check	✓	
Hoses and Clamps	Inspect / Replace	✓	
V-belts	Inspect / Adjust / Replace	✓	

When tightening hydraulic fitting always use a torque wrench, as over tightening of fittings can break internal seals. Please follow the torque settings in the table below.

Fitting Size	Torque Values (Nm)	Torque Settings (Nm)
2"	300	355
1 1/2"	215	320
1 1/4"	140	245
1"	115	155
3/4"	95	125
1/2"	47	71
3/8"	27	38
1/4"	20	23
1/8"	9	11

9.5 Service Schedule

For further engine maintenance information, refer to the engine manufacturer's operation manual supplied.

This machine has the following engine options:

A C4.4 Tier 3 Electric Throttle Engine

B C4.4 Tier 3 Manual Throttle Engine

C C4.4 Tier 3 Constant Speed Engine

D C4.4 Tier 4 Final Engine

The tables below list maintenance schedules. The letters in the engine section represent the different engine options on this machine.

*Suction filters should be changed when replacing the hydraulic oil.

Hydraulic System	Job	First 100 Hours	Every 250 Hours	Every 500 Hours	Every 1000 Hours	Every 2000 Hours
Hydraulic oil	Analysis - Check / Top-up / Replace if necessary			✓	✓	✓
	Replace					✓
Hydraulic relief pressures	Check / Adjust				✓	✓
Hydraulic Return Filter (1st replace at 100 hours)	Replace	✓		✓	✓	✓
Hydraulic Oil Suction Filter*	Remove / Replace				✓	✓
Conveyors						
Feeder gearbox oil (1st replace at 100 hours)	Replace	✓				
	Check / Top Up / Replace				✓	✓
Tail drum bearings	Check / Clean		✓	✓	✓	✓
Drive drum bearings	Check / Clean		✓	✓	✓	✓
Guards	Check / Replace		✓	✓	✓	✓
Cylinder pivots, conveyor adjustment pivots and conveyor belt tensioners	Grease		✓	✓	✓	✓
Tracks						
Visual wear on components	Check			✓	✓	✓
Gearbox oil (1st replace at 100 hours)	Replace	✓				
	Check / Top Up / Replace				✓	✓

Engine Maintenance	Job		Every 250 Hours	Every 500 Hours	Every 1000 Hours	Every 1500 Hours	Every 2000 Hours
Cooling System Coolant Sample (Level 1)	ABCD	Obtain	✓	✓	✓	✓	✓
Engine Oil Sample	ABCD	Obtain	✓	✓	✓	✓	✓
Engine Oil and Filter*	ABCD	Change	✓	✓	✓	✓	✓
Engine Valve Lash	ABC	Inspect / Adjust		✓	✓	✓	✓
Fan Clearance	AD	Check		✓	✓	✓	✓
V-Belts	ABC	Inspect / Adjust / Replace		✓	✓	✓	✓
Crankcase Breather (Canister)	ABC	Replace		✓	✓	✓	✓
Cooling System Supplemental Coolant Additive (SCA)	ABCD	Test / Add		✓	✓	✓	✓
Engine Air Cleaner Element (Dual element)	ABCD	Clean / Replace		✓	✓	✓	✓
Engine Air Cleaner Element (Single Element)	AD	Replace		✓	✓	✓	✓
Fuel System Primary Filter (Water Separator) Element	AD	Replace		✓	✓	✓	✓
Fuel System Secondary Filter	ABCD	Replace		✓	✓	✓	✓
Fuel Filter (In-Line)	D	Replace		✓	✓	✓	✓
Radiator	ABCD	Clean		✓	✓	✓	✓
Engine Protective Devices	B	Check		✓	✓	✓	✓
Diesel Exhaust Fluid Filter	D	Clean / Replace				✓	
Engine Crankcase Breather Element	D	Replace				✓	
Pump Main Filter	D	Replace				✓	
Tank Header Filter	D	Replace				✓	
Clean Emissions Module Support	D	Inspect					✓
Aftercooler Core	AD	Inspect					✓
Belt Tensioner	A	Inspect					✓
Belt	D	Inspect			✓		✓
Exhaust Manifold	A	Inspect					✓
Starting Motor	ABCD	Inspect					✓
Turbocharger	ABCD	Inspect					✓

Engine Maintenance	Job		Every 250 Hours	Every 500 Hours	Every 1000 Hours	Every 1500 Hours	Every 2000 Hours
Water Pump	ABCD	Inspect			✓		✓
Alternator	ABC	Inspect					✓
Engine Mounts	ABCD	Inspect					✓
Cooling System Coolant Sample (Level 2)	ABC	Obtain					✓

*Due to the severe environment that most machine operate in the engine oil and filter change should be every 250 hours of service. However if oil sampling and analysis is carried out it is possible to increase the engine oil and filter change to every 500 hours of service.

Engine Maintenance	Job		Every 3000 Hours	Every 4000 Hours	Every 6000 Hours	Every 10000 Hours	Every 12000 Hours
Alternator and Fan Belt	ABCD	Inspect / Adjust / Replace	✓		✓		✓
Cooling System Coolant (DEAC)	ABCD	Change	✓		✓		✓
Cooling System Water Temperature Regulator	ABC	Replace	✓		✓		✓
Fuel Injection Nozzles	B	Test / Exchange	✓		✓		✓
Aftercooler Core	AD	Clean / Test		✓			✓
Coolant System Coolant (ELC)	ABCD	Add / Change			✓		✓
Coolant system coolant (ELC)	ABCD	Change					✓
DEF Manifold Filters	D	Replace				✓	

9.6 Lubrication

It is important that a strict routine of regular servicing is undertaken from the start of operation of the machine.

Regular checks on fluids and the lubrication of the machine, in accordance with the schedule, is essential.

⚠ DANGER

Fluid injection hazard

There is a high pressure system and only suitably qualified experienced engineers should tackle any problems that may arise. Always relieve the pressure from the hydraulic system before carrying out any kind of maintenance or adjustment.

⚠ WARNING

Wear personal protective equipment.

Shutdown, tag out and lockout machine.

Falling hazard. Do not climb onto the machine. Always use a suitable maintenance platform.

Incorrect grease and/or lubrication schedules can cause premature wear or damage to bearings.

NOTICE

Do not mix greases. The blend can have a lower specification than the individual greases and can lead to premature bearing failure. USE ONE BRAND/SPECIFICATION ONLY.

To deliver the specified quantity of grease to shaft bearings, ascertain the amount the grease gun will deliver with each ‘pump’. Do not guess or assume an amount! Check the greasing equipment used regularly. To prevent contamination of the grease, wipe the grease nipples clean before applying the grease gun.

It is the operators responsibility to ensure that all bearings are greased with the correct quantity and type of grease at the correct intervals specified.

(1) Recommended Lubricants

NOTICE

Failure to use the appropriate specification of engine oil will reduce the life of your engine.

Failure to use the correct specification of engine will also reduce the life and the effectiveness of your after treatment system (if fitted). Refer to the engine manufacturer's manual for additional information that relates to the lubrication for your engine

Always use lubricants and fluids that meet the international specifications.

Greases outside these specifications are not designed for use in Vibrating Screens e.g. greases with molybdenum sulphate additives, and should never be used.

Grease cartridges have a general shelf life of approximately 36 months and should be discarded beyond this point. Consult grease specifications for specific information.

Grease and grease cartridges should always be stored between 0°C and 40°C and in a dry environment. Grease or grease cartridges should be immediately discarded should any sign of moisture or other contamination be present. Similarly, this requirement applies to grease guns or auto greasing systems.

Failure to comply with these recommendations may dramatically reduce screen bearing life and will void warranty on screen bearings and related components.

The Shell grades are for reference only.

Below is a list of the recommended alternatives suitable for use with your machine. These products are lithium base greases of Class 2 with extreme pressure additives. The listed greases fall under DIN classifications KP2K-20 or KP2K-30. The listed greases are used in general applications only, unless otherwise stated.

- Fuchs Renolith EP2
- Mobil Mobilux EP2
- Total Multis EP 2
- Castrol Spheerol EP2
- Shell Retinax EP2

Table 9.1 - Lubricants and Fluid

	Volume	International Spec	Recommended
Fuel (Tier 3)	345 L (76 Gal)	DIN51 601	
Fuel (Tier 4)	345 L (76 Gal)	Ultra low sulfur fuel as per EN 590:2004	
Engine Oil (C4.4 Tier 3)	13.5	CAT ECF-1-a, API CH-4/CI-4	CAT DEO (SAE 15W-40)
Engine Oil (C4.4 Tier 4)	7	CAT ECF-3, API CJ-4, AECA E9	CAT DEO-ULS (SAE 15W-40)
Coolant	17	CAT EC-1, ASTM D4985 or ASTM D6210	CAT Extended Life Coolant (ELC) or CAT Diesel Engine Antifreeze (DEAC)
Coolant (Tier 4i)	16.5	CAT EC-1, ASTM D4985 or ASTM D6210	CAT Extended Life Coolant (ELC) or CAT Diesel Engine Antifreeze (DEAC)
Hydraulic Oil (Tier 3/Tier 4i)	564/450	ISO 46	Shell Tellus 46
Feeder Gearbox	1.3	SAE 80W/90	Shell Spirax S2 G 80W-90
Track Final Drive	See Track Spec	SAE 80W/90, ISO 4406 (20/18/18)	Shell Spirax S2 G 80W-90
General Grease	N/A	KP2K-20 KP2K-30	Refer to “Recommended Lubricants” list
Screen Bearing Grease*	N/A	KPHC 2N-20 KPHC 2N-30.	Mobil Mobilith SHC220 Maxol Heavy Duty Synthetic 220
Vibrating Grid Grease	N/A	KPHC 2N-20 KPHC 2N-30.	Mobil Mobilith SHC220 Maxol Heavy Duty Synthetic 220

*screen bearing greasing schedule, 20 grams or 22 strokes per week (based on grease gun delivering 1cc per stroke)

Table 9.2 - Hot Climates

	Capacity (l)	Name	Recommended
Hydraulic Oil (Tier 3/ Tier 4)	564/450	Hydraulic Oil Grade 68	Shell Tellus S2 M 68
Feeder Gearbox	1.3 L (0.26 Gals)	Gear Oil Grade 320	Shell Omala S2 G320
Track Gearbox		Gear Oil Grade 320	Shell Omala S2 G320
Engine Oil (Tier 3)	13.5	Engine Oil 15W-40	CAT DEO 15W-40
Engine Oil (Tier 4)	7	Engine Oil 15W-40 Low SAPS	CAT DEO-ULS

Where ambient temperatures are +15°C - +50°C.

Table 9.3 - Cold Climate

	Capacity (l)	Name	Recommended
Hydraulic Oil (Tier 3/ Tier 4)	564/450	Hydraulic Oil Grade 32 Cold Climate	Shell Tellus S4 VX
Feeder Gearbox	1.3 L (0.26 Gals)	Gear Oil Grade 150 Synthetic	Shell Omala S4 GX 150
Track Gearbox		Gear Oil 75W/90	Shell Spirax S6 AXME 75W/90
Engine Oil (Tier 3)	13.5	Engine Oil 5W-30	Cat DEO Cold Weather SAE 0W-40
Engine Oil (Tier 4)	7	Engine Oil 5W-30 Low SAPS	Cat DEO Cold Weather SAE 0W-40

Where ambient temperatures are -20°C - +30°C.

(2) Capacities - Fluid

Table 9.4 - Capacities

Engine coolant (Cat)	11.4 ltr (2.5 gal)
Engine oil including filter (Cat)	7.3 ltr (1.6 gal)
Hydraulic tank (Tier 4)	450 ltr (118 gal)
Hydraulic tank (Tier 3)	477 ltr (126 gal)
Fuel tank	345 ltr (76 gal)

Table 9.5 - Adjustment Data

Engine speed	1040 rpm
Screen shaft speed*	920 rpm ±20 rpm

* Dependent on throw

Table 9.6 - Pressures

Hydraulic system	210 bar (3000 psi)

(3) Greasing Schedule

Table 9.7 - Greasing Schedule

AREA	FREQUENCY	GRAMS	OUNCES
All Conveyor Tail Drum Bearings LH/RH	100 HRS	2	0.07
All Conveyor Drive Drum Bearings LH/RH	100 HRS	2	0.07
Screen Bearings LH/RH	50 HRS	20	0.71
Vibrating Grid	50 HRS	25	0.88

1 Gram = 0.035 Ounce

Each grease gun will put out a differing amount per stroke. Check greasing equipment before use

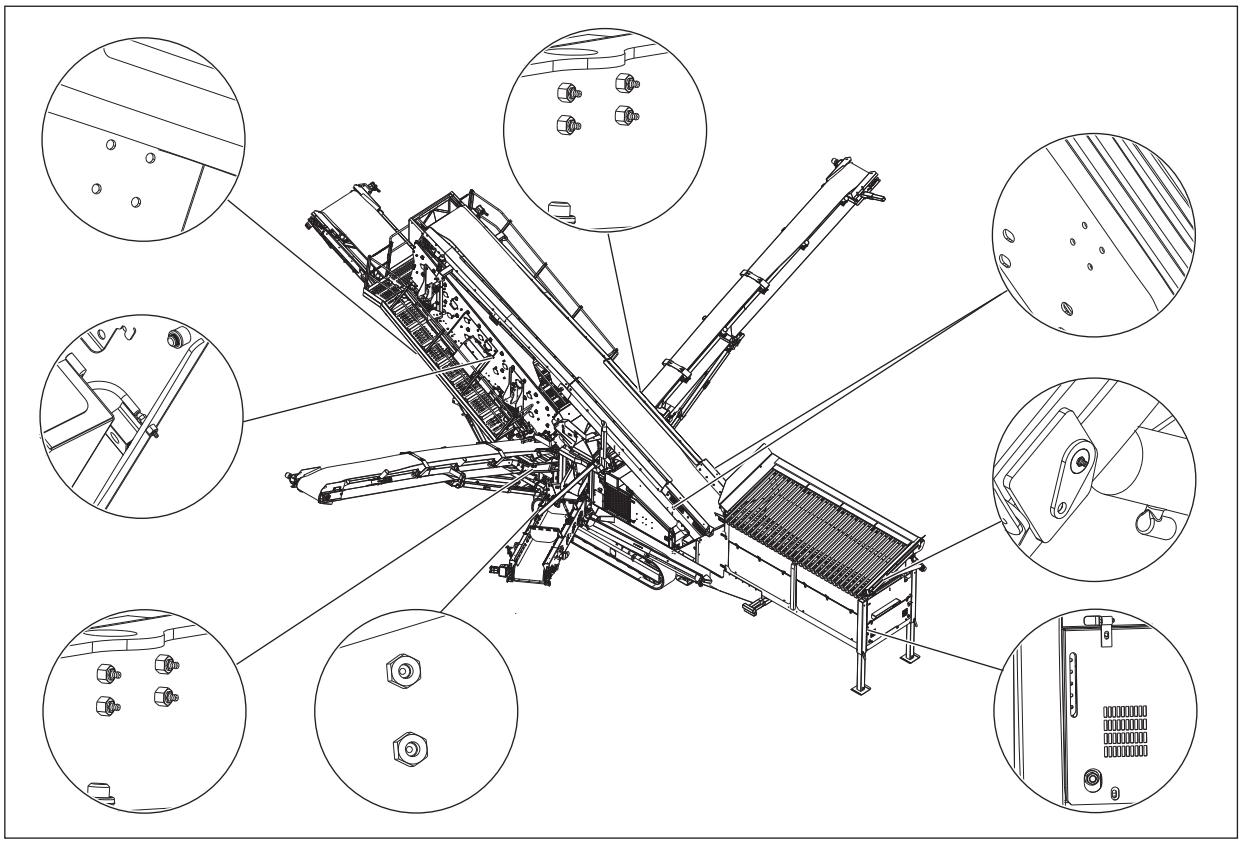

Figure 9.2 - Greasing Schedule

9.7 Feeder Unit Maintenance

(1) Clean and Check the Conveyor Belt

⚠ DANGER

Entanglement hazard.

Switch off, and lockout all energy sources before performing maintenance or servicing.

⚠ WARNING

Read and understand manual.

Falling material hazard.

Hearing hazard.

Falling hazard

Falling from this machine can result in serious injury or even death.

Do not climb on machine.

Use a suitable lifting maintenance platform to service machine.

Do not remove any guard while the machine is running or start the machine while a guard is removed.

If any damage to the belt is found, do not operate the machine until it is repaired or replaced entirely by your local Terex dealer.

⚠ CAUTION

Do not unfasten or remove any guard while the machine is running or start the machine while a guard is unfastened or removed.

If any damage to the belt is found, do not operate the machine until it is repaired or replaced entirely by your local Terex dealer.

NOTICE

Conveyor belts must be fitted by qualified and competent suppliers only.

PROCEDURE

1. Observe all safety warnings.
2. Stop the engine.
3. Clean the conveyor belt using a high pressure hose. Ensure that eyes are protected by wearing safety glasses.
4. Check the belt for cuts, tears, rips or any other physical damage.
5. Close and secure the guard doors in the correct position.

(2) Tensioning the Feeder Conveyor Belt

⚠ WARNING

Wear personal protective equipment.

Fall hazard.

Switch off the machine and implement the lockout and tagout procedure.

NOTICE

Do not over tension the belt as this will damage the drum bearings.

PROCEDURE

1. Observe all safety warnings.
2. Start the feeder conveyor. (Refer to Chapter 7).
3. Run the feeder conveyor at desired speed.
4. Tighten the belt by adjusting both belt adjusters evenly.

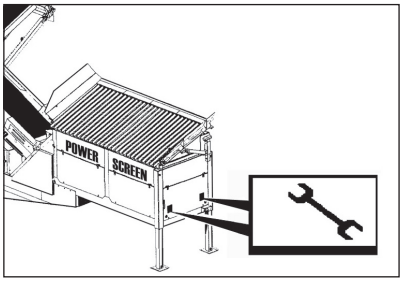

Figure 9.3 - Feeder Conveyor Tensioners

(3) Feeder Conveyor Alignment

⚠ WARNING

Wear personal protective equipment.

Fall hazard.

Switch off the machine and implement the lockout and tagout procedure.

⚠ CAUTION

Do not unfasten or remove any guard while the machine is running or start the machine while a guard is unfastened or removed.

PROCEDURE

1. Observe all safety warnings.
2. Start the feeder conveyor.
3. Turn feeder variable speed control valve (Item 6) COUNTER CLOCKWISE to run the feeder conveyor at maximum speed.

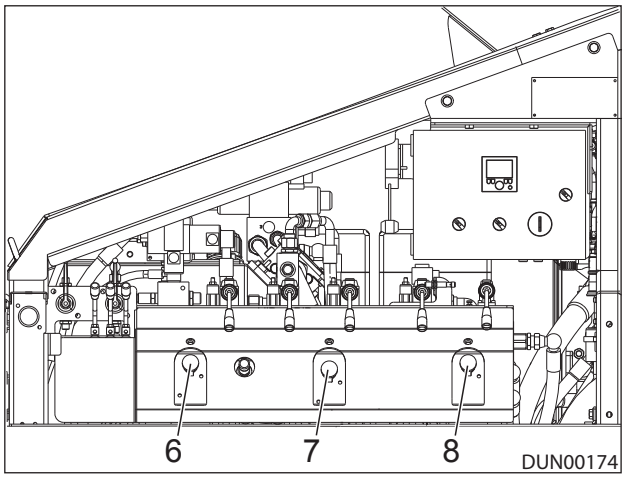

Figure 9.4 - Power Unit

4. Observe the conveyor through the viewing apertures and determine to which side the conveyor is tracking off.

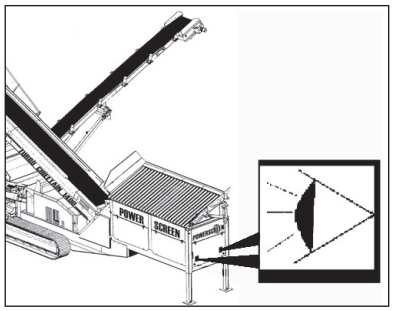

Figure 9.5 - Feeder Conveyor Viewing Apertures

5. If the conveyor is tracking off to the right side, operate the right side adjuster one turn at a time until the belt tracks correctly.

6. If the conveyor is tracking off to the left side, operate the left side adjuster one turn at a time until the belt tracks correctly.

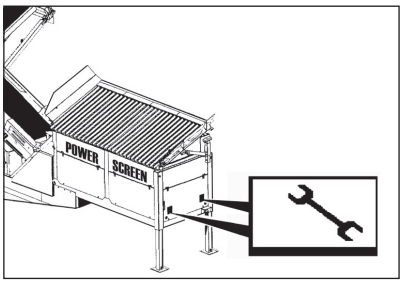

Figure 9.6 - Feeder Conveyor Adjusters

(4) Changing the Feed Conveyor Gearbox Oil

NOTICE

Do not overfill the gearbox.

PROCEDURE

1. Remove the fill plug to allow air into the gearbox to allow it to drain
2. Remove the drain plug and drain the oil to an external container large enough to hold all of the oil.
3. Replace the drain plug.
4. Refill the gearbox through the filler plug with the exact amount of oil required.
5. Replace the filler plug.
6. Close the beltfeeder gearbox cover guard.

9.8 Screen Unit Maintenance

Maintenance of your screenbox is minimal, however it is recommended to carry out the following procedures to increase its effectiveness and prolong is lifespan.

After the initial 10 hours of operation, Carry out the following procedure.

⚠ DANGER

Switch off and lockout before working on a machine.

Dangerous nip points exist.

⚠ WARNING

Ensure all personnel are clear of the machine. Switch off the machine and implement the lockout and tagout procedure before carrying out any maintenance on the machine.

Switch off and lockout before working at a machine.

Dangerous nip points exist.

Ensure that there is mesh in the screenbox in all decks when the machine is operational. Should only one of the decks be needed, then an oversize mesh should be fitted to retain the structure of the screenbox, as well as to minimise wear.

(1) Checking Screen Drive Belt Tension

⚠ WARNING

Wear personal protective equipment.

Nip hazard.

Fall Hazard.

Switch off the machine and implement the lockout and tagout procedure.

NOTICE

Ensure that there is mesh in the screenbox in all decks when the machine is operational. Should only one of the decks be needed, then an oversize mesh should be fitted to retain the structure of the screenbox, as well as to minimise wear.

The recommended amount of slack in the belt is 9 mm.

PROCEDURE

1. Observe all safety warnings.
2. Ensure machine is switched off, locked out and tagged out, Remove the ignition key and carry it with you.

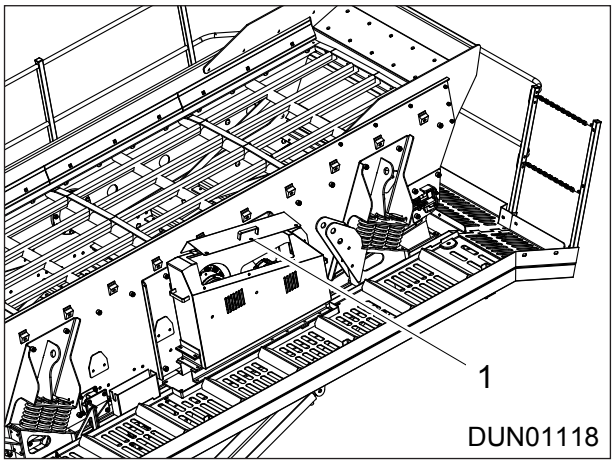

Figure 9.7 - Screen drive belt inspection door.

3. Open the inspection door (Item 1) on the screen box flywheel cover and the screen drive belt will be visible.
4. Check the tension of the belt by pushing down on it in the center and measuring the deflection (Item A).

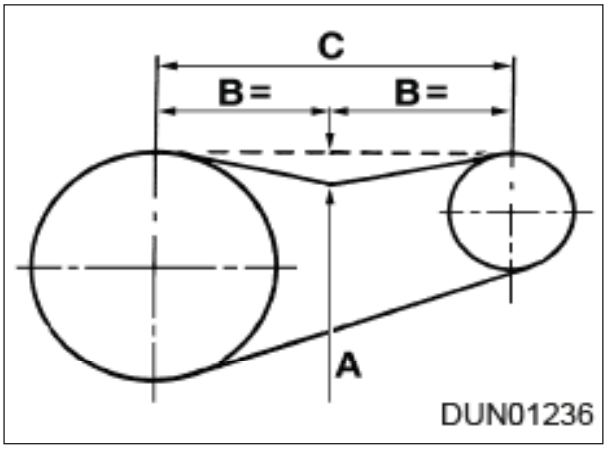

Figure 9.8 - Measuring belt tension

5. Depending on the value of the deflection measurement, the belt may need tensioned.

(2) Tensioning the Screen Drive Belt

⚠ WARNING

Wear personal protective equipment.

Nip hazard.

Fall Hazard.

Switch off the machine and implement the lockout and tagout procedure.

NOTICE

Do not over tension the belt as this will damage the belt and the belt tensioner.

The recommended amount of slack in the belt is 9mm.

PROCEDURE

1. Observe all safety warnings.
2. Ensure machine is switched off, locked out and tagged out. Remove the ignition key and carry it with you.
3. Undo the bolts (Item 1) securing the drive side of the screen box flywheel cover and remove.

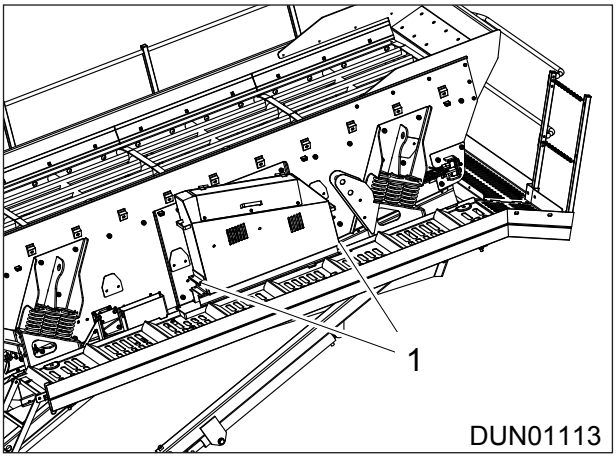

Figure 9.9 - Screen Box Flywheel Cover

4. Tighten or slacken the nuts on the V belt adjuster (Item 1) until the required tension is reached in the V belts (Item 2). The correct tension is approximately 9 mm of slack.

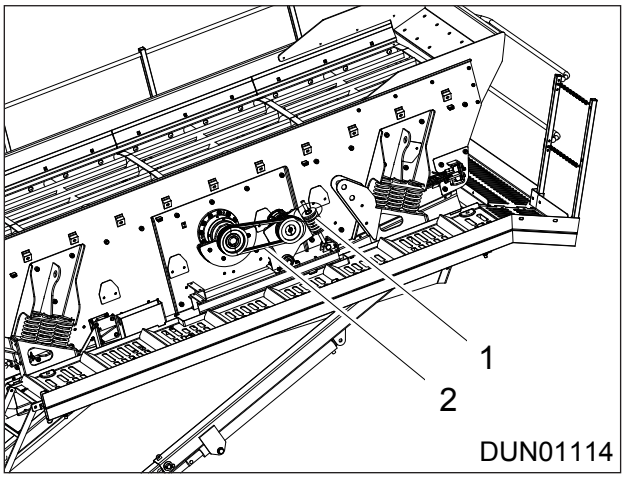

Figure 9.10 - Screen Box Drive Belt Tensioner

5. Replace the cover and bolt in position using the bolts (Items 1).

(3) Changing the Screen Mesh

⚠ CAUTION

Only lifting equipment capable of lifting 500 kg or more may be used for this operation.

Tail conveyor must not be used as a platform unless:

- Tail conveyor has been pinned in position.
- Screenbox has been pinned in position.
- Engine lockout procedure has been implemented.

The following instructions should be carried out on both the right and left hand side. The screen tensioning ram control lever controls both screen tensioning rams.

NOTICE

The centre of the mesh tensions first and the appropriate tension is reached when the outside edges of the mesh are taut. Absolute maximum tension is obtained when the screen tension bar is parallel with the hook on the screen mesh. This amount of tension is not always required.

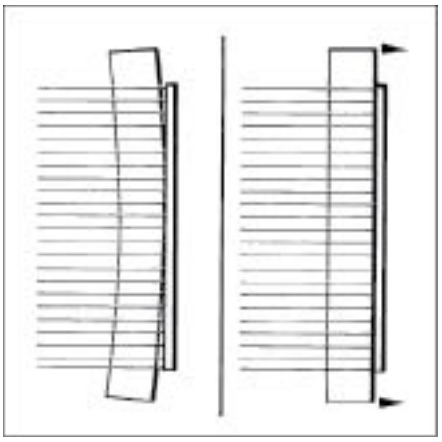

Figure 9.11 - Maximum Screen Mesh Tension

PROCEDURE

1. Observe all safety warnings
2. Start the machine, Reference: Chapter. 7
3. Lower the tail conveyor and pin in position. The purpose of this is to allow easier access to the lower meshes.
4. Retract the main conveyor to its lowest point.
5. Lower the screenbox to its lowest point and pin in position.
6. Move the screen tensioning ram from the mounts on maintenance platform to the appropriate position on the screenbox and secure in place using correct pins.

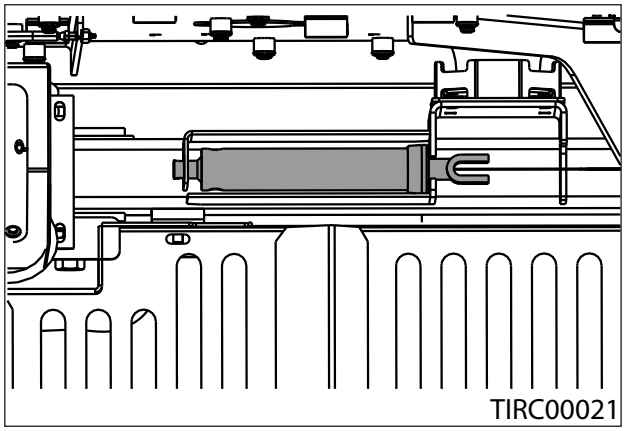

Figure 9.12 - Screen Tensioning Cylinder

7. Move lever on screen tensioning cylinder control valve to the up position, Reference: Figure 9.12.

   » *The screen tension rams should extend.*

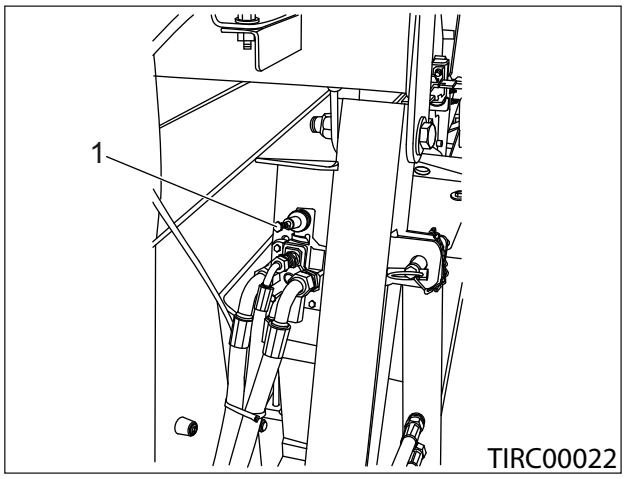

Figure 9.13 - Screen Tensioning Ram Control

8. Pin the cylinders at the end through the screen tension bar (Item 1), Reference: Figure 9.13.
9. Remove the retaining pins (Item 3), Reference: Figure 9.15.

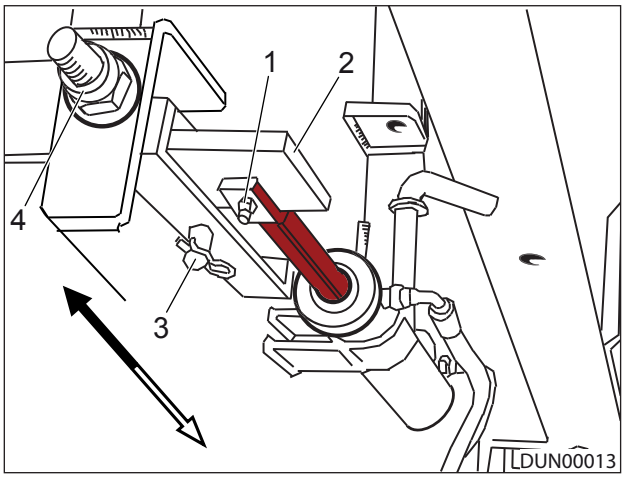

Figure 9.14 - Screen Tensioning Cylinder

10. Move lever of screen tensioning cylinder control valve to the down position.
    » This should cause the screen tension bar to move clear of the retaining pin holes. The screen tension bar will retract from the screen hooks
11. Switch off the machine, Reference: Chapter 7.
12. Implement the lockout and tagout procedure, Reference: Chapter 8.
13. Once machine has been locked out tail conveyor may be used as a platform to facilitate changing meshes.
14. Remove retaining pins (Item 1).
15. Remove screen tension bar (Item 2).
16. Push screen mesh back until it is free to lift up.
17. Lift up using a prise bar and slide the old mesh out.
18. Check the rubber cushions and replace if necessary.
19. Remove any material build up from inside the screenbox.
20. Insert new screen meshes ensuring the hooked end of the mesh is in the correct position around the tension bar.
21. Insert screen tension bar (Item 2) ensuring it is fitted correctly in screen box and around tension bar.
22. Restart machine.
23. Insert pin (Item 1) through screen tension bar and end of screen tensioning ram.
24. Move the screen tensioning cylinder control valve lever to the up position to extend the cylinder and hence tension the mesh.
25. Insert retaining pins (Item 3) through appropriate holes.
26. Remove bolts (Item 1) from the end of the screen tensioning cylinders.
27. Retract screen tensioning cylinders using screen tensioning cylinder control valve.
28. Disconnect ram hoses from ports, remove both rams from screen box, and secure them to sub-frame using the pins provided.
29. Tension screen tension bolts (Item 4), if required.

30. To release the side tensioned impact mesh, slacken the nuts or remove the quick release pins enough to allow the mesh to be removed from under the clamps.
31. Replace mesh.
32. Retighten clamps.
33. Refit washers (Item 2), quick release pins (Item 1) and split pins (Item 3).

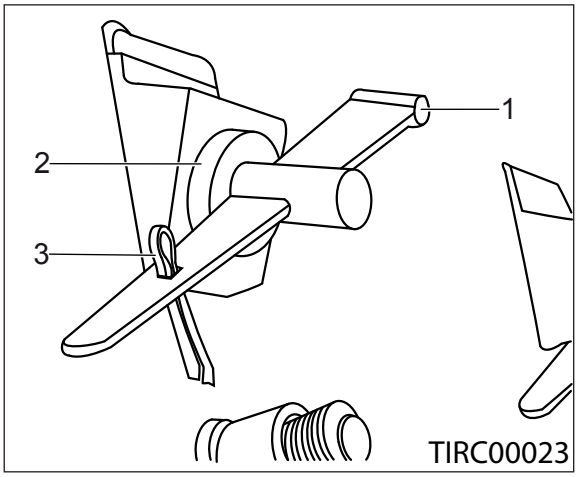

Figure 9.15 - Mesh Clamps and Quick Release Pins

34. Return screen unit, tail conveyor and main conveyor to original positions.

(4) Re-Tuning the Screen Unit

⚠ WARNING

Wear personal protective equipment

Fall hazard

Entanglement hazard

⚠ CAUTION

Re-tuning should only be performed by personnel trained in accordance with instructions provided in this manual or by trained Terex personnel.

When altering the flywheel counter weights, always act on both sides of the screen shaft.

PROCEDURE

1. Observe all safety warnings.
2. Set up the machine to it‘s working/ operating position.
3. Fit meshes and speed harps as required.
4. Move up side conveyor levers, to start side conveyors.
5. Move up screen and tail conveyor lever, to start screenbox and tail conveyor.
6. Move up main conveyor lever to start the main conveyor and vibrating grid. (If fitted)
7. Let the machine run for 45 minutes to allow the hydraulics to warm up properly.
8. Set screen speed at 1120 ±20 rpm. Engine speed should be about 1040 rpm.
9. Stop the machine and implement lockout procedure.

(5) Snubber Rubber Maintenance

⚠ WARNING

Wear personal protective equipment.

Nip hazard.

Fall Hazard.

Switch off the machine and implement the lockout and tagout procedure.

NOTICE

Snubber Rubbers must have a clearance of 5 mm at all times

Both Snubber rubber spacing and condition must be checked on a weekly basis

PROCEDURE

1. Observe all safety warnings.
2. Ensure machine is switched off, locked out and tagged out. Remove the ignition key and carry it with you.

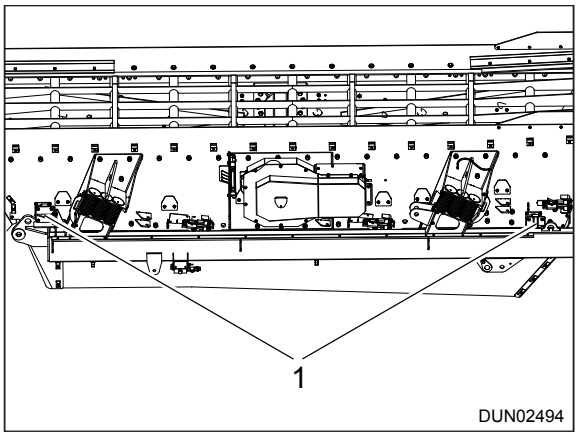

Figure 9.16 - Snubber Rubber Location

3. There are four Snubber Rubbers (Item 1) that require maintenance, two located on either side of the screenbox.

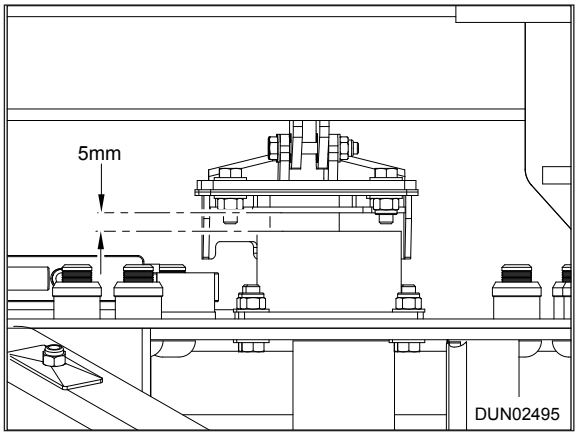

Figure 9.17 - Snubber Rubber Spacing

4. The Snubber Rubbers must have a clearance of 5 mm from the screenbox. If this clearance is incorrect it can be adjusted.
5. The four bolts on the snubber rubber frame can be adjusted to allow the snubber rubbers to move up and down. The sub frame mounts allow the snubber rubbers to move in and out.
6. Adjust these when necessary to allow for optimal performance.

9.9 Conveyor Maintenance

(1) Clean and Check the Conveyor Belt

⚠ DANGER

Entanglement hazard.

Switch off, and lockout all energy sources before performing maintenance or servicing.

⚠ WARNING

Read and understand manual.

Falling material hazard.

Hearing hazard.

Falling hazard

Falling from this machine can result in serious injury or even death.

Do not climb on machine.

Use a suitable lifting maintenance platform to service machine.

Do not remove any guard while the machine is running or start the machine while a guard is removed.

If any damage to the belt is found, do not operate the machine until it is repaired or replaced entirely by your local Terex dealer.

⚠ CAUTION

Do not unfasten or remove any guard while the machine is running or start the machine while a guard is unfastened or removed.

If any damage to the belt is found, do not operate the machine until it is repaired or replaced entirely by your local Terex dealer.

NOTICE

Conveyor belts must be fitted by qualified and competent suppliers only.

PROCEDURE

1. Observe all safety warnings.
2. Stop the engine.
3. Clean the conveyor belt using a high pressure hose. Ensure that eyes are protected by wearing safety glasses.
4. Check the belt for cuts, tears, rips or any other physical damage.
5. Close and secure the guard doors in the correct position.

(2) Belt Tracking

Oblique travel may cause fast deterioration of the belt. In order to assist you we have compiled some of the reasons for oblique travel with appropriate remedies.

Reasons for Oblique Travel	Remedies	Examples of Oblique Travel
1. Insufficient aligning of drums and Idlers	a. Align all drums, carrying idlers and return idlers at right angles to the travelling direction of the belt. b. Check that all drums and idlers are level to each other. If a & b are as above then carry out the following. Adjustments are made as indicated on Figs. 1, 2 & 3 by turning drums and carrying idlers in direction of arrow until the belt is running straight and centred on the conveyor. Also return idlers may cause oblique belt travel and therefore they must be aligned at right angles to the travelling direction of the belt and after that adjustment can be made.	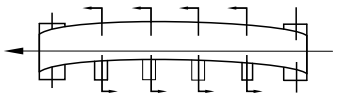 Fig.1. Turning carrying idlers. 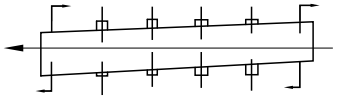 Fig.2 Turn drums. 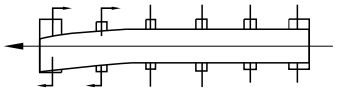 Fig.3. Turning both drum and carrying idlers.
2. Misalignment of frame.	Oblique travel can be reduced by turning forward outer carrying idlers 1-3 degrees in travelling direction of the belt. See Fig. 4: if this does not correct the oblique travel then align the frame.	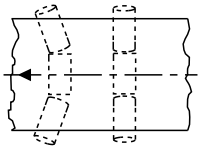 Fig.4 Turning forward carrying idlers.
3. Material built up on drums and idlers.	Clean idlers and drums. Check belt cleaners and replace if necessary. Possibly change to more efficient type.	

(3) Tensioning Conveyor Belts

⚠ DANGER

Under no circumstances should any adjustment be made on the belt whilst the machine is running. There is an entanglement hazard and risk of trapping parts of the body.

⚠ WARNING

Wear personal protective equipment.

Fall hazard.

Switch off the machine and implement the lockout and tagout procedure.

NOTICE

Do not over tension the conveyor belts as this will damage the drum bearings.

PROCEDURE

1. Observe all safety warnings.
2. For main conveyor open hopper access doors if necessary.
3. Start the conveyor to be tensioned (Reference: Chapter 7).
4. Tighten the belt by adjusting both belt adjusters evenly, 2 turns at a time until slippage stops.

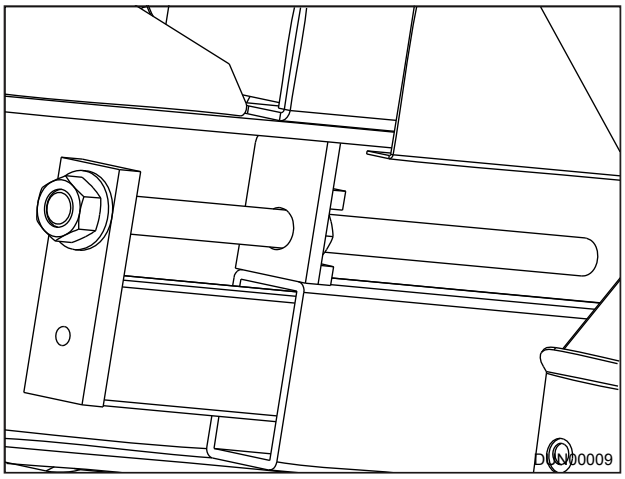

Figure 9.18 - Conveyor Belt Tensioner

(4) Conveyor Alignment

⚠ WARNING

Wear personal protective equipment.

Fall hazard.

Switch off the machine and implement the lockout and tagout procedure.

NOTICE

Do not over tension the conveyor belts as this will damage the drum bearings.

PROCEDURE

1. Observe all safety warnings.
2. Open the guard doors where necessary.
3. Start the engine.
4. Start the conveyor to be aligned.
5. Observe the conveyor and determine which side the conveyor is ‘tracking off’.
6. If the conveyor is tracking off to the right side, operate the right side adjuster one turn at a time until the belt tracks correctly.
7. If the conveyor is tracking off to the left side, operate the left side adjuster one turn at a time until the belt tracks correctly.

9.10 Hydraulic System

⚠ DANGER

Fluid Injection Hazard

This is a high pressure system and only suitably qualified experienced engineers should tackle any problems that may arise. Always relieve the pressure from the hydraulic system before carrying out any kind of maintenance or adjustment.

⚠ WARNING

Lock-out machine.

Wear personal protective equipment.

NOTICE

The air vents in the cap must be kept open to allow the hydraulic system to “breathe”.

Always use the correct grade of oil.

If the hydraulic system requires filling up on a regular basis, all hydraulic parts and hoses should be inspected for leaks.

Always practice extreme cleanliness when servicing.

(1) General

⚠ WARNING

Injection hazard from high pressure fluid. Wear personal protective equipment.

Switch off the machine and implement the lockout and tagout procedure.

THIS IS A HIGH PRESSURE SYSTEM. Never carry out any maintenance work without ensuring the hydraulic system is locked out and depressurized. Check the pressure gauges and control screen, if fitted, to view the current system pressure. Open the bleed valve, if fitted, until all pressure is relieved then close the valve. Do not amend the hydraulic system. In the event of any problems these should only be dealt with by suitably experienced and qualified engineers

Before maintenance you must read and understand the safety sections in this manual.

NOTICE

All hydraulic functions are powered by pumps driven by the engine / electric motors.

All relief valve pressures are factory set and should not be adjusted on site.

The hydraulic fluid reservoir together with associated equipment must be maintained in accordance with the set level and in the schedules and types, see General Routine checks, Specific checks, Lubrication and Fluid Specifications. Only use a recommended fluid. Specific checks

The Hydraulic system which is used in your machine was chosen for its effectiveness and resistance to climatic and operating conditions.

This must be kept topped up with the correct hydraulic fluid and regular checks must be made to ensure this.

The filter element requires changing when the indicator is in the red at operating temperature.

(2) Oil Tank, Pipes & Fittings

In order to prevent contamination, the Oil Tank on your machine is of sealed construction. Access to the tank, if required, is via inspection covers which are mounted on the top of the tank, underneath the filler cap. The outside of the tank must be thoroughly cleaned before the removal of any of these covers.

It is very important that hydraulic pipes and hoses are checked regularly for leaks, scuffing and wear. Loose fittings should be securely tightened. Worn or leaking hoses should be replaced. Replacement hoses are available on request.

(3) Hydraulic Fluids

⚠ WARNING

Injection hazard from high pressure fluid. Wear personal protective equipment.

Switch off the machine and implement the lockout and tagout procedure.

If the hydraulic system requires filling up on a regular basis, all hydraulic parts and hoses should be inspected for leaks. Any repairs should be made prior to continued operation of the machine.

Before maintenance you must read and understand the safety sections in this manual.

NOTICE

Check the fluid level on the gauge and top up as necessary.

It is essential when replenishing hydraulic fluid, attending to filters, or general maintenance. To apply the greatest degree of cleanliness as it is most important that contaminants are not allowed to enter the system.

If hydraulic fluid needs to be added, to maintain the correct level, this should be pumped in through the fill port on the large return filter.

The air vents in the cap must be kept open to allow the hydraulic system to “breathe”.

Always use the correct grade of oil, otherwise overheating will occur. (Refer to Section, “lubricants and fluids”)

For best operating results it is strongly recommended that the hydraulic fluid used is selected from the recommended range listed in “Recommended Lubricants” section.

In the service it is recommended that the hydraulic system is analyzed every 500 hours and the oil changed if necessary. The hydraulic fluid should be changed after the machine has stopped work. The drain plug for the hydraulic system is mounted underneath the tank. In the event of pump or motor failure, both suction line and return line filters must be changed.

Hydraulic fluids play an important part in any hydraulic system. They have two main functions.

- To transmit power
- To lubricate moving parts

As a power transmitting medium the fluid must flow easily and be as incompressible as possible. In most hydraulic components, the fluid provides internal lubrication only. For long component life, fluids are available containing additives that have high anti-wear properties. The fluids are known as anti-wear type hydraulic oils, which are recommended for your machine. In most cases the fluid is the only oil seal present. For example, there are no sealing rings between the spool and the body of the directional valve. As the sealing characteristics of the fluid depend on its retaining viscosity, it is important that the oil selected is capable of maintaining the minimum viscosity change over a wide range of operating temperatures.

Some adverse effects of incorrect viscosity are:

- Increased power consumption
- High oil temperatures
- Entrapment of air in oil,
- Increase pressure drop.
- Excessive wear or even seizure under heavy loads,
- Poor pump performance.

In addition to the qualities outlined earlier the selected fluid should also:

- Prevent rot
- Depress foaming
- Prevent formation of sludge, gum and varnish
- Retain its own stability, thereby reducing fluid replacement.

Prevent corrosion and pitting.

(a) Check Hydraulic Oil Level

⚠ WARNING

Injection hazard from high pressure fluid. Wear personal protective equipment.

Switch off the machine and implement the lockout and tagout procedure.

PROCEDURE

1. Observe all safety warnings.
2. Machine must be on level ground.
3. Always have the hydraulic oil at normal operating temperature.
4. Always have all cylinders retracted (where possible).
5. Check the level indicator (Item 2).
6. The oil level must be between the red and black marks on the gauge.

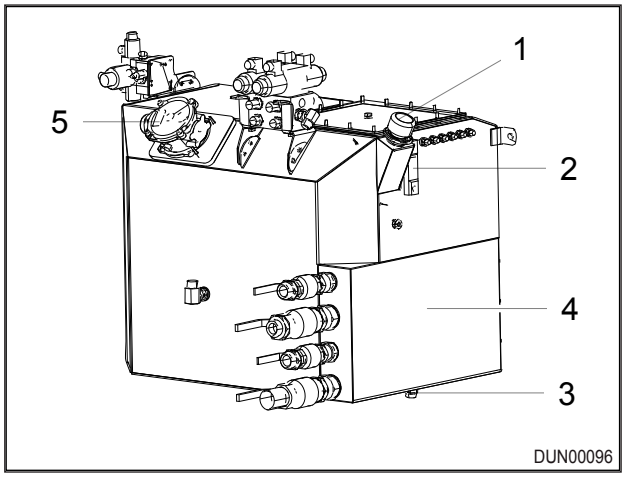

Figure 9.19 - Hydraulic Tank

(b) Adding Hydraulic Fluid

⚠ WARNING

Injection hazard from high pressure fluid. Wear personal protective equipment.

Switch off the machine and implement the lockout and tagout procedure.

⚠ CAUTION

Never overfill the hydraulic tank as this will cause leakage from the filler cap.

PROCEDURE

1. Observe all safety warnings.
2. Machine must be on level ground.
3. Always have all cylinders retracted (where possible).
4. Implement lock-out procedure.
5. Clean the area around the filler cap (Item 1).
6. Open the filler cap.
7. Fill the tank to midway between red and black marks on the level indicator. (Correct grade of hydraulic oil must be used, see Section “Lubricants and Fluids”.)

(c) Change Hydraulic Oil

⚠ WARNING

Injection hazard from high pressure fluid. Wear personal protective equipment.

Switch off the machine and implement the lockout and tagout procedure.

NOTICE

ALWAYS practice extreme cleanliness when servicing.

Before removing the drain plug (Item 3):

- Release any pressure in the hydraulic tank by slowly unscrewing the filler cap (Item 1).
- Ensure a suitable container is placed on the ground to catch the full capacity of oil in the tank.
- Remember to stand on one side to avoid oil which will spill from the drain hole.

Change the suction elements when an oil change is being carried out.

PROCEDURE

1. Observe all safety warnings.
2. Always have the hydraulic oil at normal operating temperature.
3. Always have all cylinders retracted (where possible).
4. Drain the tank by removing the drain plug (Item 3).

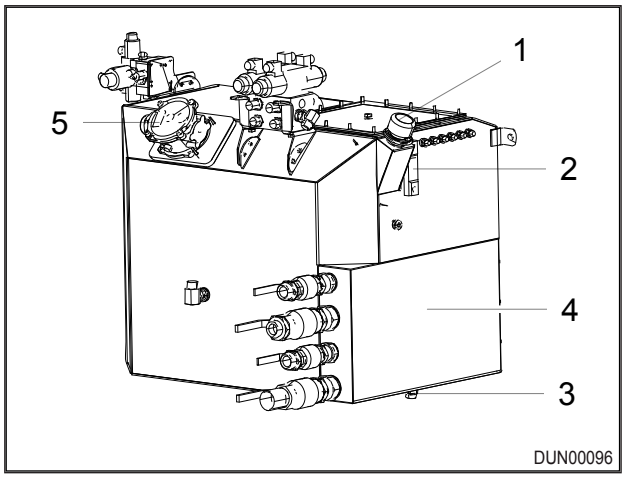

Figure 9.20 - Hydraulic Tank

5. Remove the cover plate (Item 6). Discard the gasket.

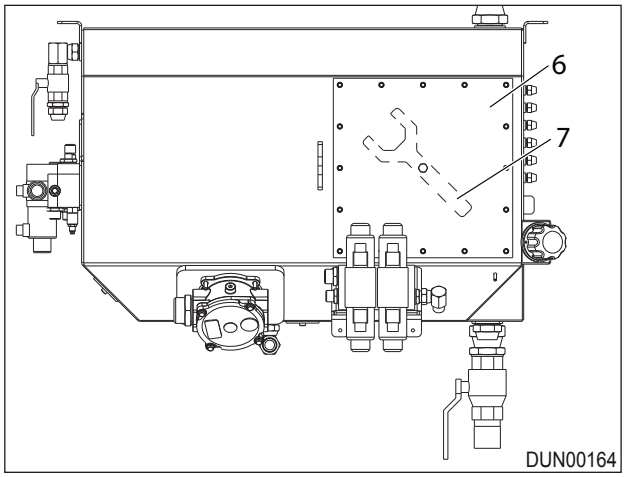

Figure 9.21 - Top View of hydraulic Tank

6. Remove the suction filter spanner (Item 7) from the cover plate.
7. Remove the suction filters (Item 8) by unscrewing them from the suction pipes using the suction filter spanner.

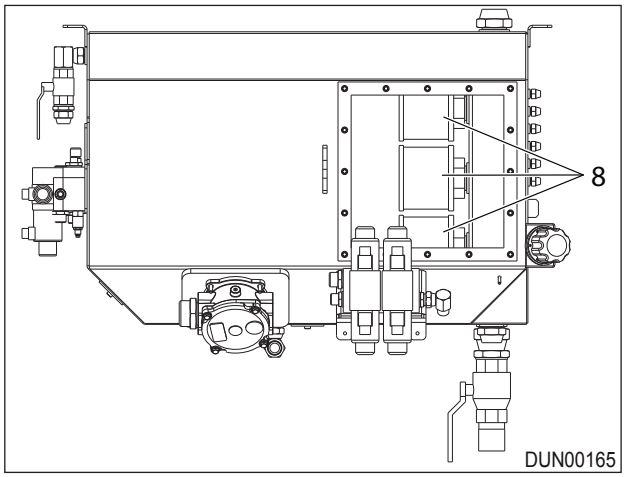

Figure 9.22 - Top View of hydraulic Tank with Cover Plate Removed

8. Flush out the tank with clean hydraulic oil taking extreme care to remove all dirt and foreign matter.
9. Fit new suction filters (Item 8) to the suction pipes.
10. Re-fit cover plate to the tank using a new gasket and refit drain plug (Item 4).
11. Change the return line filter element.
12. Refill the tank with clean hydraulic oil to midway between the red and black marks on level indicator. (For correct grade of hydraulic oil see Section Lubricants and Fluids.)
13. Run the engine to circulate the oil. Operate the hydraulic controls to purge any air from the system.
14. Stop the engine.
15. Implement the lock-out procedure, Reference: Chapter 8.
16. Fill up the system as required.

(d) Changing Suction Filters

⚠ DANGER

Switch off and lockout. Relieve all hydraulic pressure before working at a machine.

High-pressure hydraulic fluid can penetrate the skin causing serious injuries.

NOTICE

ALWAYS practice extreme cleanliness when servicing.

Change the suction filters when an oil change is being carried out.

PROCEDURE

1. Turn engine off and return all control levers to the neutral position.
2. Open the Filler cap (Item 3) to relieve any pressure inside the tank.

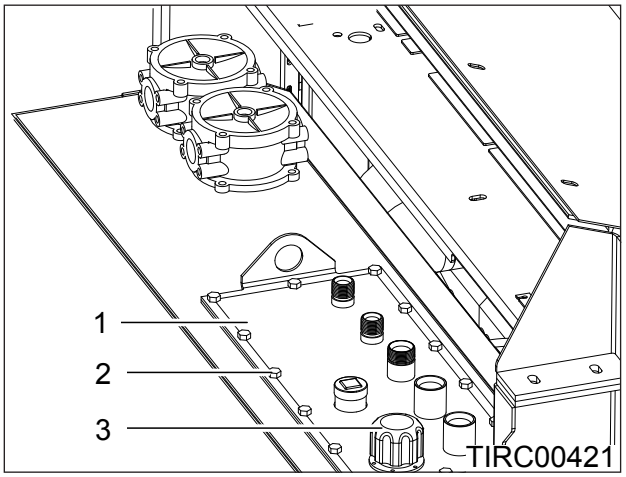

Figure 9.23 - Hydraulic Tank Inspection Plate & Filler Cap

3. Remove the bolts (Item 2) (Use a 17 mm spanner) securing the inspection plate (Item 1) in place.

4. The Suction filters are fitted to the inside of the inspection cover. To remove them lift off the inspection cover.
5. Unscrew the Filters (Item 1) from the internal Suction pipes (Item 2) and replace with new filters, Hand tighten the filters.

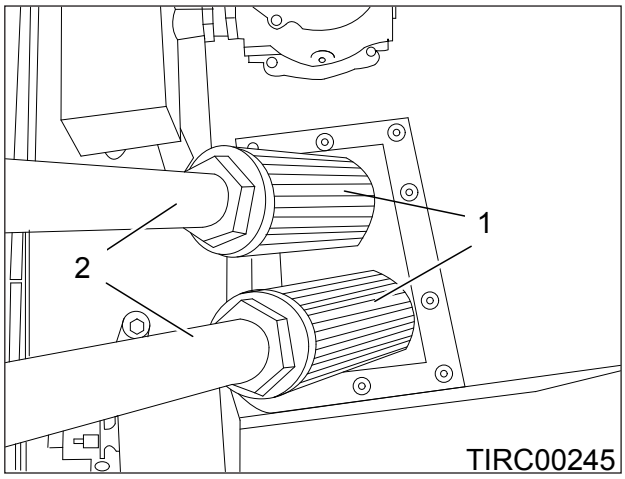

Figure 9.24 - Internal Suction Filters

6. Replace inspection covers and filler cap.

(e) Checking the Return Line Filter

⚠ WARNING

Injection hazard from high pressure fluid. Wear personal protective equipment.

Switch off the machine and implement the lockout and tagout procedure.

PROCEDURE

1. Observe all safety warnings.
2. Always have the engine running at maximum speed.
3. Always have all hydraulic equipment working.
4. Always have the hydraulic oil at normal operating temperature.
5. Check the return line filter blockage indicator (Item 1).
6. Change the filter element immediately when the green sector of the blockage indicator goes to red.

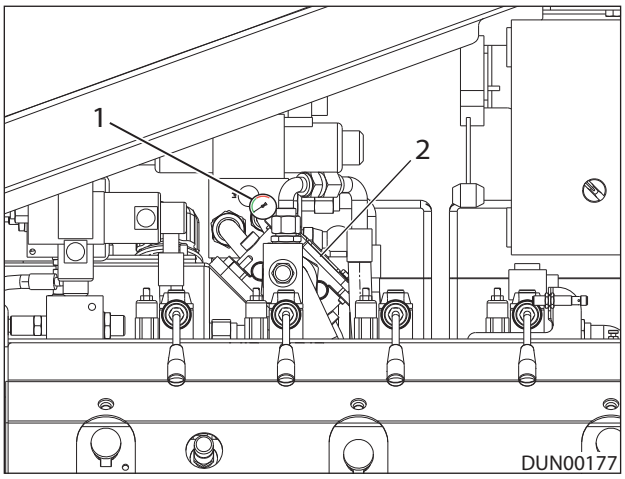

Figure 9.25 - Return Line Filter

(f) Changing the Return Line Filter

⚠ DANGER

Hydraulic fluid under pressure can penetrate the skin causing serious injury.

Always use a piece of cardboard to check for leaks. Do not use your hand. If fluid is injected under the skin, it must be surgically removed or gangrene will result.

PROCEDURE

1. Observe all safety warnings.
2. Ensure the machine is switched off, locked out and tagged out. Remove the ignition key, carry it with you.
3. Ensure all cylinders are closed (where possible).
4. Release any pressure in the hydraulic tanks by slowly unscrewing the filler cap.
5. Clean the outside of the filter housing (Item 2).
6. Remove the filter by unscrewing the 4 securing nuts and removing filter cover.
7. Lift out the old element and discard it safely and responsibly.
8. Wash out the filter cap and dry with an air hose. DO NOT USE A RAG.
9. Re-fit new filter ensuring seal ring is in good condition and correctly positioned.
10. Fit filter cover and fasten the 4 securing nuts.

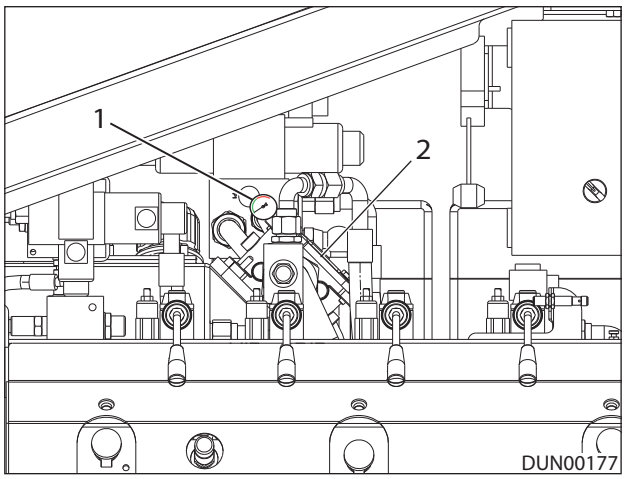

Figure 9.26 - Return Line Filter

9.11 Hydraulic Ram Maintenance

⚠ DANGER

THIS IS A HIGH PRESSURE SYSTEM. Never carry out any maintenance work without ensuring the hydraulic system is locked out and depressurised.

⚠ WARNING

Injection hazard from high pressure fluid.

Wear personal protective equipment.

Switch off the machine and implement the lockout and tagout procedure.

As part of the finish process in our chrome rod manufacturing a natural lubricant is rolled into the surface. This lubricant helps prolong the life of a hydraulic cylinder. We recommend that any cylinder exposed for more than one week must have the rod coated with a good quality water resistant grease.

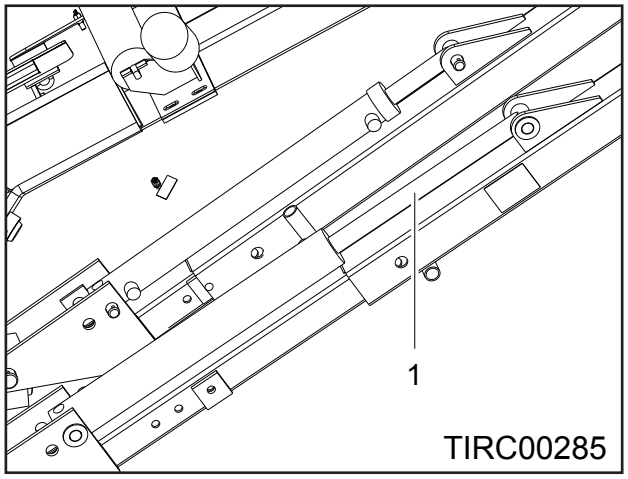

Figure 9.27 - Exposed Hydraulic Ram Chrome Rod

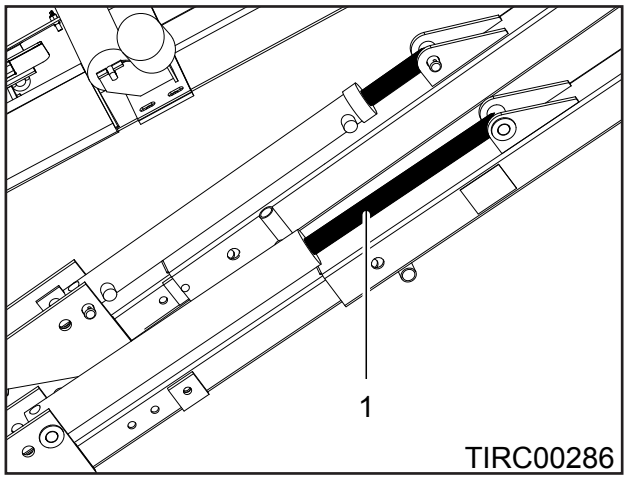

Figure 9.28 - Greased Chrome Rod

9.12 Tier 3 and Constant Speed Engine Maintenance

⚠ DANGER

Fluid Injection Hazard

This is a high pressure system and only suitably qualified experienced engineers should tackle any problems that may arise. Always relieve the pressure from the hydraulic system before carrying out any kind of maintenance or adjustment.

Burn Hazard

The oil in the system can be of a high temperature. Take precaution when working with high temperature fluids.

Electrocution Hazard

The system also includes high voltage electrical equipment and any work for maintenance and/or replacement should only be undertaken by suitably qualified experienced electrical engineers.

⚠ WARNING

Always implement the lockout procedure when carrying out maintenance or adjustments to the machine.

Hazardous nip points exist.

Wear personal protective equipment.

⚠ CAUTION

Beware of burns from hot surfaces and fluids.

NOTICE

For the diesel engine power pack fitted to your machine to continue to perform safely, efficiently and reliably it is imperative that all the recommendations given in the separate engine manual are strictly followed with regard to:

- Safety
- Operation
- Lubrication
- Maintenance
- Service
- Parts

See the engine operators manual for more detailed information regarding the engine before carrying out any maintenance work.

Adhere to the regular maintenance schedules and procedures specified by the manufacturer using the numbers of hours run as displayed on the engine service meter.

It is recommended to change the Oil filter when changing the oil.

Dispose of old filters in a correct and environmentally friendly manner.

(1) Changing Engine Filters & Oil

(See the engine Operators Manual for more detailed information regarding the Engine)

DANGER

Fluid Injection Hazard

This is a high pressure system and only suitably qualified experienced engineers should tackle any problems that may arise. Always relieve the pressure from the hydraulic system before carrying out any kind of maintenance or adjustment.

WARNING

Always implement the lockout procedure when carrying out maintenance or adjustments to the machine.

Wear personal protective equipment.

CAUTION

Beware of burns from hot surfaces and fluids.

NOTICE

Renew the oil filter and clean the centrifugal oil cleaner when changing oil.

Always dispose of filter elements in a safe manner.

(a) Checking Engine Oil

PROCEDURE

1. Turn off the engine. Open the engine inspection door.
2. Remove dipstick (Item 1) from the engine and clean. Re-insert the dipstick fully.

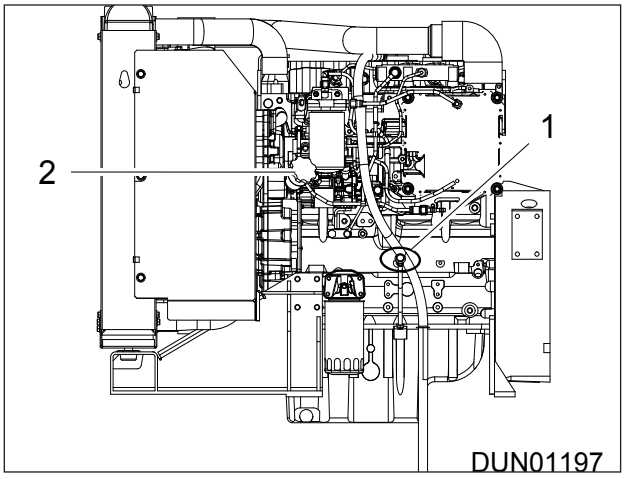

Figure 9.29 - Engine view through inspection door

3. Remove the dipstick again and observe that the oil level is between the minimum and maximum levels. If the level is below the minimum mark oil has to be added through the filler cap (Item 2).

4. It is important the oil level is not above the maximum level. If this happens some oil must be removed.

(b) Changing Engine Oil & Filter

PROCEDURE

1. Operate the engine to ensure the oil is warm, this enables the oil to flow more easily, also when the oil is cool waste particles settle on the bottom of the oil pan and will not drain off.
2. Stop the engine and open the filler cap (Item 2).
3. Remove the drain plug located underneath the engine and drain the oil to an external container large enough to hold all the oil.

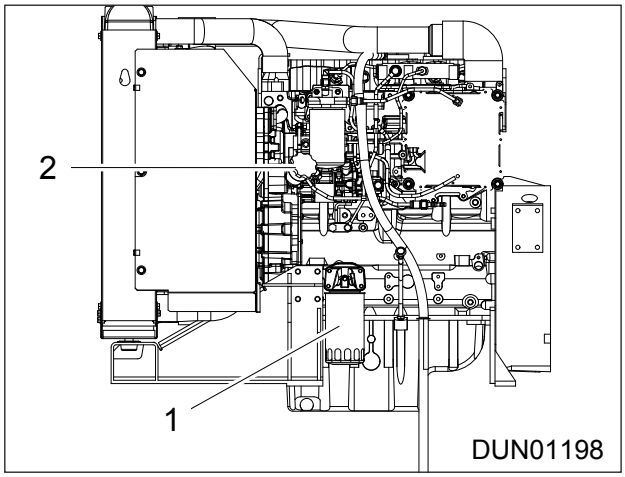

Figure 9.30 - Engine Oil Filter

4. When all the oil has drained off replace the drain plug.
5. Loosen the Filter (Item 1) and dispose off properly. Replace the new filter and hand tighten.
6. Refill the engine with oil and dip the engine.

(2) Changing Fuel Filters

(a) Draining the Fuel Filter Water Trap

⚠ WARNING

Lock-out machine.

Wear personal protective equipment

Diesel fuel is highly flammable.

Never remove filler cap or refuel, with the engine running.

Never add gasoline or any other fuel mixes to diesel because of increased fire or explosion risks.

Do not smoke or carry out maintenance on the fuel system near open flame or sources of sparks, such as welding equipment, etc.

PROCEDURE

1. Observe all safety warnings.
2. Turn off the engine. Open the engine inspection door (Item 1).
3. Unscrew the drain bung (Item 1, Reference: Figure 9.32) at the bottom of the water trap (Item 2, Reference: Figure 9.31) and allow the water to drain out into a suitable container.

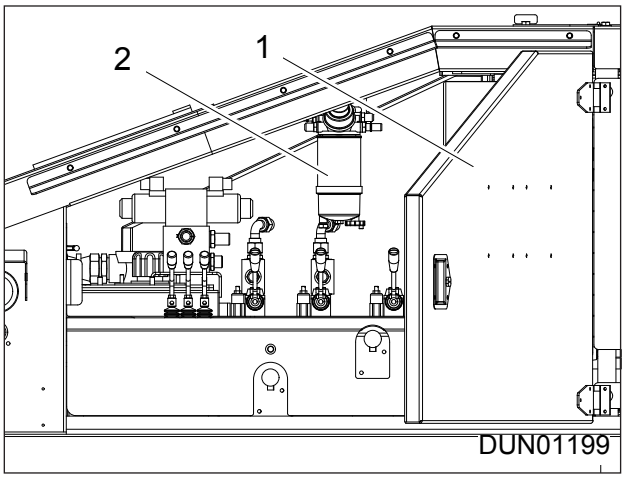

Figure 9.31 - Engine Oil Filters

4. Tighten the drain plug when pure diesel starts to come out.
5. Clean up any spilled diesel.

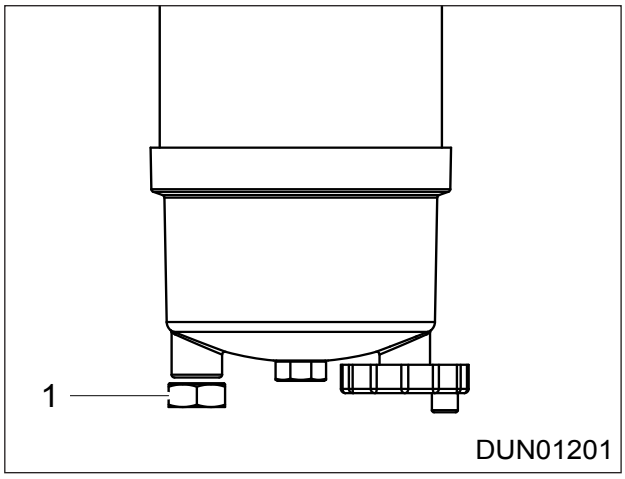

Figure 9.32 - Water Trap

(b) Changing Watertrap Filter

To change the watertrap filter element follow the procedure outlined.

PROCEDURE

1. Stop the machine and turn the fuel supply off.
2. Remove the bleed.
3. Remove the filter& watertrap bowl.
4. Remove the watertrap bowl from the filter element.
5. Oil the watertrap bowl.
6. Attach new element to watertrap bowl.
7. Oil top of filter element.
8. Attach the filter element.
9. Prime the fuel system to fill the element and watertrap, and to remove air from the system.
10. Replace the bleed.

(c) Changing the Fuel Filters

⚠ WARNING

Lock-out machine.

Wear personal protective equipment

Diesel fuel is highly flammable.

Do not smoke or carry out maintenance on the fuel system near open flame or sources of sparks, such as welding equipment, etc.

NOTICE

Fill up the new fuel filter with diesel. This will make the restart of the machine easier.

PROCEDURE

1. Observe all safety warnings.
2. Unscrew the fuel filter (Item 1).

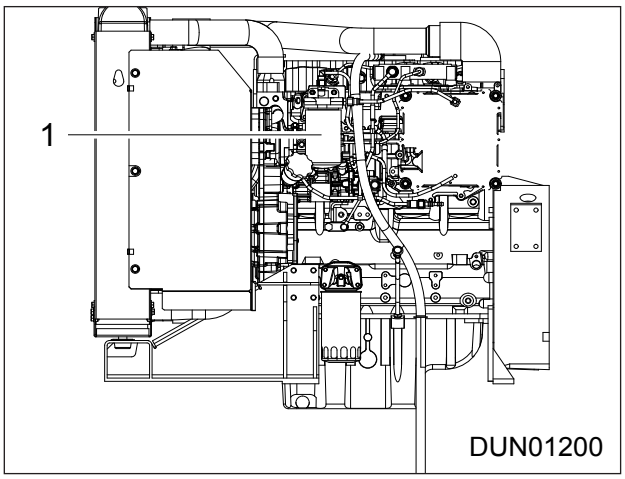

Figure 9.33 - Engine Fuel Filters

3. Fill the new filters with diesel and fit into position.
4. Tighten the new fuel filter and o-ring.

9.13 Tier 4 Engine Maintenance

⚠ DANGER

Fluid Injection Hazard

This is a high pressure system and only suitably qualified experienced engineers should tackle any problems that may arise. Always relieve the pressure from the hydraulic system before carrying out any kind of maintenance or adjustment.

Burn Hazard

The oil in the system can be of a high temperature. Take precaution when working with high temperature fluids.

Electrocution Hazard

The system also includes high voltage electrical equipment and any work for maintenance and/or replacement should only be undertaken by suitably qualified experienced electrical engineers.

⚠ WARNING

Always implement the lockout procedure when carrying out maintenance or adjustments to the machine.

Hazardous nip points exist.

Wear personal protective equipment.

⚠ CAUTION

Beware of burns from hot surfaces and fluids.

NOTICE

For the diesel engine power pack fitted to your machine to continue to perform safely, efficiently and reliably it is imperative that all the recommendations given in the separate engine manual are strictly followed with regard to:

- Safety
- Operation
- Lubrication
- Maintenance
- Service
- Parts

See the engine operators manual for more detailed information regarding the engine before carrying out any maintenance work.

Adhere to the regular maintenance schedules and procedures specified by the manufacturer using the numbers of hours run as displayed on the engine service meter.

It is recommended to change the Oil filter when changing the oil.

Dispose of old filters in a correct and environmentally friendly manner.

(1) Changing Engine Oil & Filters

(See the engine Operators Manual for more detailed information regarding the Engine)

⚠ DANGER

Fluid Injection Hazard

This is a high pressure system and only suitably qualified experienced engineers should tackle any problems that may arise. Always relieve the pressure from the hydraulic system before carrying out any kind of maintenance or adjustment.

⚠ WARNING

Always implement the lockout procedure when carrying out maintenance or adjustments to the machine.

Wear personal protective equipment.

⚠ CAUTION

Hot surfaces. Beware of burns from hot oil.

NOTICE

Renew the oil filter and clean the centrifugal oil cleaner when changing oil.

Always dispose of filter elements in a safe manner.

(a) Checking Engine Oil

PROCEDURE

1. Turn off the engine. Open the engine inspection door (Item 1).
2. Remove dipstick (Item 1) from the engine and clean. Re-insert the dipstick fully.

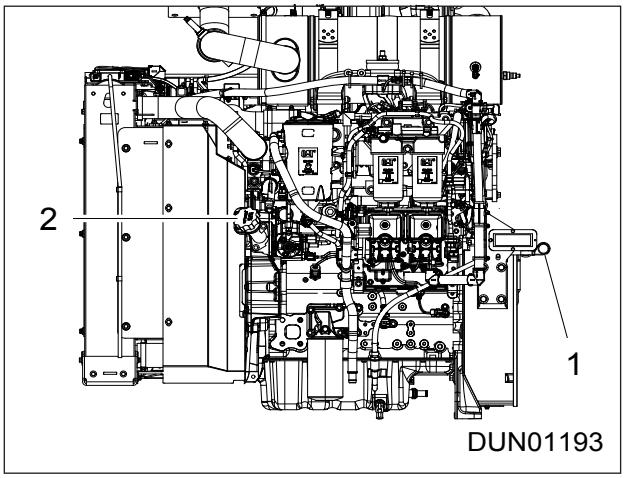

Figure 9.34 - Engine Oil Filler Cap & Dipstick

3. Remove the dipstick again and observe that the oil level is between the minimum and maximum levels. If the level is below the minimum mark oil has to be added through the filler cap (Item 2) .
4. It is important the oil level is not above the maximum level. If this happens some oil must be removed.

(b) Changing Engine Oil & Filter

PROCEDURE

1. Operate the engine to ensure the oil is warm, this enables the oil to flow more easily, also when the oil is cool waste particles settle on the bottom of the oil pan and will not drain off.
2. Stop the engine and open the filler cap (Item 2).
3. Remove the drain plug located underneath the engine and drain the oil to an external container large enough to hold all the oil.

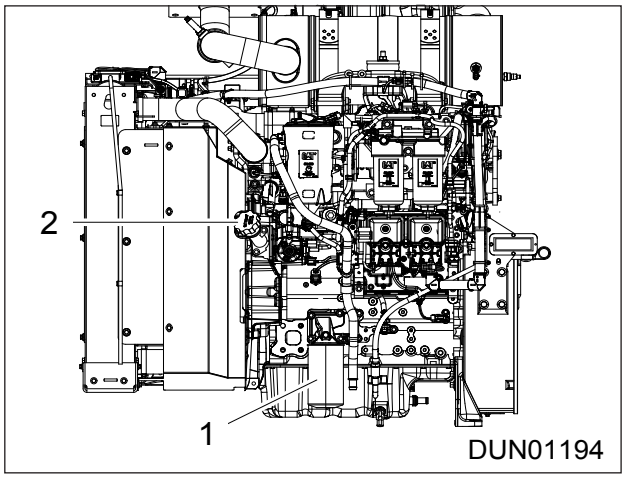

Figure 9.35 - Engine Oil Filter

4. When all the oil has drained off replace the drain plug.
5. Loosen the Filter (Item 1) and dispose off properly. Replace the new filter and hand tighten.
6. Refill the engine with oil and dip the engine.

(2) Changing Fuel Filters

(a) Draining the Fuel Filter Water Trap

⚠ WARNING

Lock-out machine.

Wear personal protective equipment

Diesel fuel is highly flammable.

Never remove filler cap or refuel, with the engine running.

Never add gasoline or any other fuel mixes to diesel because of increased fire or explosion risks.

Do not smoke or carry out maintenance on the fuel system near open flame or sources of sparks, such as welding equipment, etc.

PROCEDURE

1. Observe all safety warnings.
2. Turn off the engine. Open the engine inspection door (Item 1).
3. Unscrew the drain bung (Item 1, Reference: Figure 9.37) at the bottom of the water trap (Item 2, Reference: Figure 9.36) and allow the water to drain out into a suitable container.

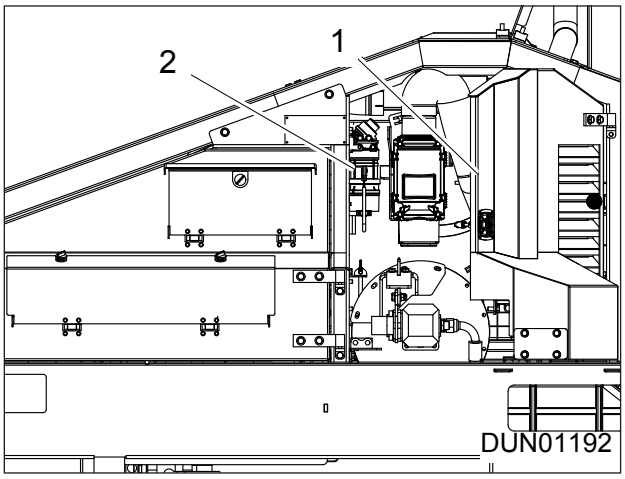

Figure 9.36 - Engine Oil Filters

4. Tighten the drain plug when pure diesel starts to come out.
5. Clean up any spilled diesel.

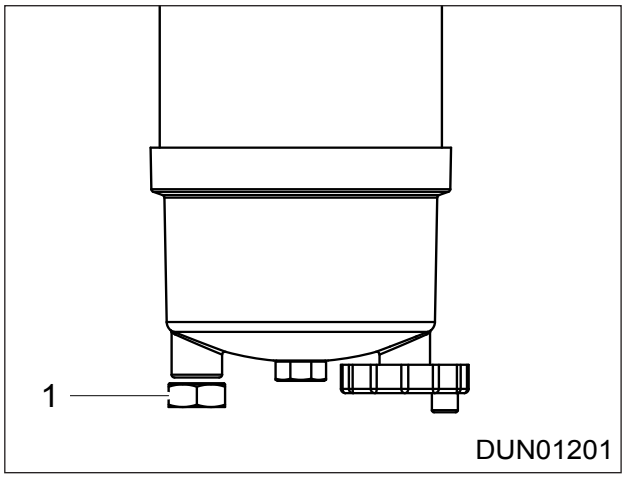

Figure 9.37 - Water Trap

(b) Changing Watertrap Filter

To change the watertrap filter element (Item 2) follow the procedure outlined.

PROCEDURE

1. Stop the machine and turn the fuel supply off.
2. Remove the bleed.
3. Remove the filter and watertrap bowl.
4. Remove the watertrap bowl from the filter element.
5. Oil the watertrap bowl.
6. Attach new element to watertrap bowl.
7. Oil top of filter element.
8. Attach the filter element.
9. Prime the fuel system to fill the element and watertrap, and to remove air from the system.
10. Replace the bleed.

(c) Changing the Fuel Filters

⚠ WARNING

Lock-out machine.

Wear personal protective equipment

Diesel fuel is highly flammable.

Never remove filler cap or refuel, with the engine running.

Never add gasoline or any other fuel mixes to diesel because of increased fire or explosion risks.

Do not smoke or carry out maintenance on the fuel system near open flame or sources of sparks, such as welding equipment, etc.

NOTICE

Fill up the new fuel filter with diesel. This will make the restart of the machine easier.

PROCEDURE

1. Observe all safety warnings.
2. Unscrew the fuel filters (Item 1)

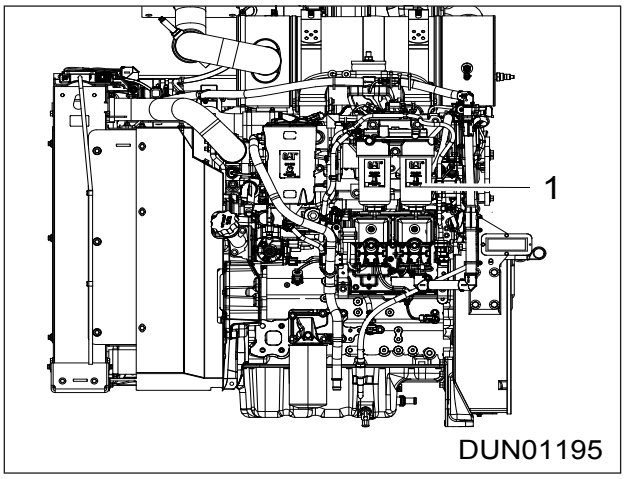

Figure 9.38 - Engine Fuel Filters

3. Fill the new filters with diesel and fit into position.
4. Tighten the new fuel filter and o-ring.

(3) Servicing The DEF (Diesel Exhaust Fluid) System

⚠ WARNING

Wear personal protective equipment.

Switch off the machine and implement the lockout and tagout procedure.

Hot Surface Hazard

Beware of hot DEF and surfaces.

DEF is corrosive and therefore must be stored in tanks constructed of approved materials. (Refer to engine manual for more details)

Care should be taken when dispensing DEF. Spills should be cleaned immediately. All surfaces should be wiped clean and rinsed with water.

DEF that has been split will crystallize when the water within the liquid evaporates. Split DEF will attack paint and metal. If DEF is split, wash the area with water immediately.

Caution should be used when dispensing DEF near an engine that has recently been running. Spilling DEF onto hot components may cause the release of ammonia vapours. Do not breathe ammonia vapours. Do not clean up any spills with bleach.

NOTICE

It is recommended that filter elements are not cleaned or reused but replaced with new items.

Do not run the engine with the filter elements removed.

Do not use agricultural grade urea solutions. Do not use any fluids that do not meet ISO 22241-1 requirements in SCR emissions reduction systems. Use of these Fluids can result in numerous problems including damage to SCR equipment and a reduction in NOx conversion efficiency.

(a) DEF Tank Location

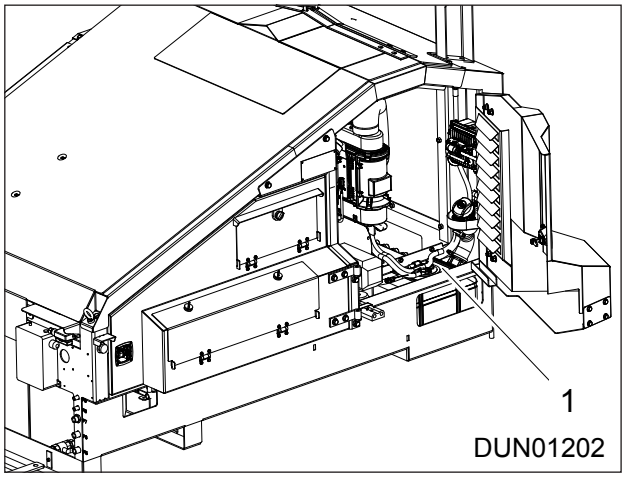

Figure 9.39 - Location of the DEF tank - Item 1

(b) Changing the Pump Main Filter

⚠ WARNING

Wear personal protective equipment.

Switch off the machine and implement the lockout and tagout procedure.

Hot Surface Hazard

Beware of hot DEF and surfaces.

NOTICE

It is recommended that filter elements are not cleaned or reused but replaced with new items.

Do not run the engine with the filter elements removed.

PROCEDURE

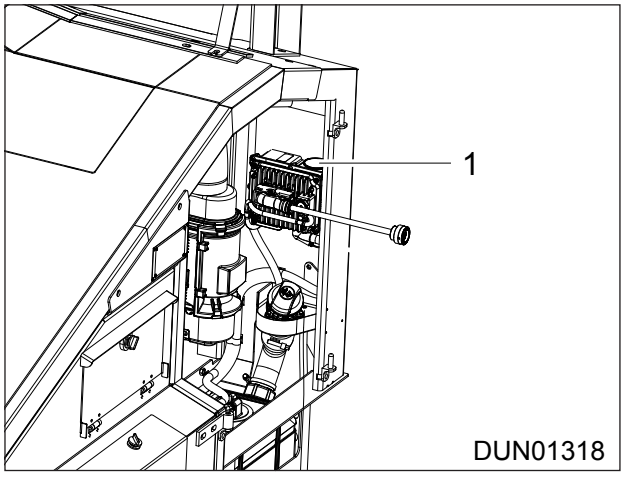

Figure 9.40 - Pump Main Filter Location

1. Ensure that the area around the Diesel Exhaust Fluid (DEF) filter (Item 1) is clean and free from dirt. The DEF filter threaded cap and the filter element area combined assembly.

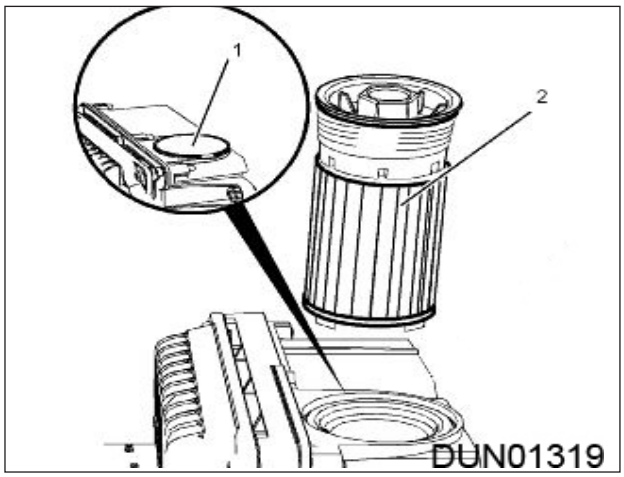

Figure 9.41 - Pump Main Filter Parts

2. Remove the protective cover (Item 1). Remove the DEF filter assembly and discard the filter assembly.
3. Install a new DEF filter assembly into DEF pump housing (Item 2).
4. Tighten filter assembly to a torque of 14 Nm (124 lbin). Install the protective cover.
5. Turning on the power will automatically prime the DEF system.

(c) Changing the DEF Tank Filler Screen

⚠ WARNING

Wear personal protective equipment.

Switch off the machine and implement the lockout and tagout procedure.

Hot Surface Hazard

Beware of hot DEF and surfaces.

NOTICE

It is recommended that filter elements are not cleaned or reused but replaced with new items.

Do not run the engine with the filter elements removed.

PROCEDURE

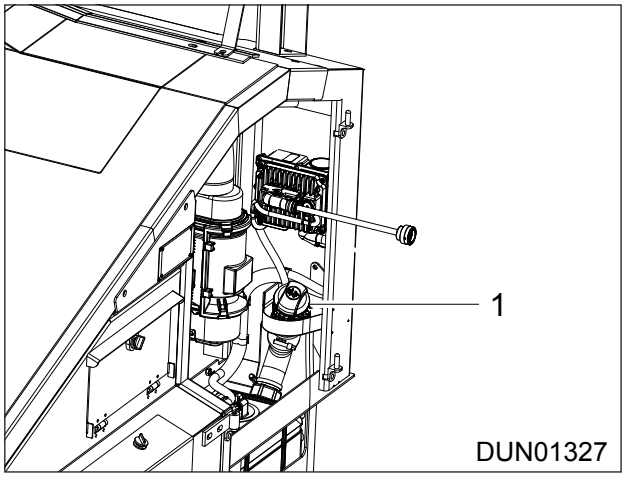

Figure 9.42 - DEF Tank Remote Filter location

1. Ensure that the area around the DEF filler cap is clean and free from dirt (Item 1).

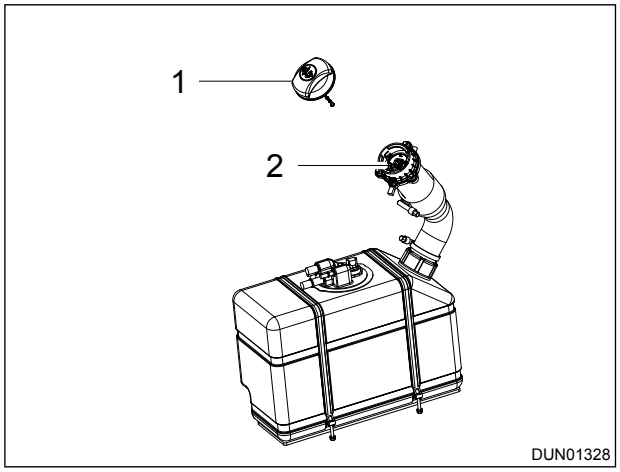

Figure 9.43 - DEF Tank Remote Filter parts

2. Unscrew the filler cap (Item 1).
3. Remove the filter (Item 2) by rotating it and lifting it out. Insert the new one.
   » *Depending on the condition of the filter, it can be cleaned in water and dried out using compressed air. If the filter screen cannot be cleaned or the filter screen is damaged, then the filter screen must be replaced.*
4. Replace the filler cap and screw it in place.

(d) Changing the DEF Manifold Filter

⚠ WARNING

Wear personal protective equipment.

Switch off the machine and implement the lockout and tagout procedure.

Hot Surface Hazard

Beware of hot DEF and surfaces.

NOTICE

If contamination of the Diesel Exhaust Fluid (DEF) is suspected, the DEF tank will need to be drained and the DEF tank flushed.

Do not run the engine with the filter elements removed.

PROCEDURE

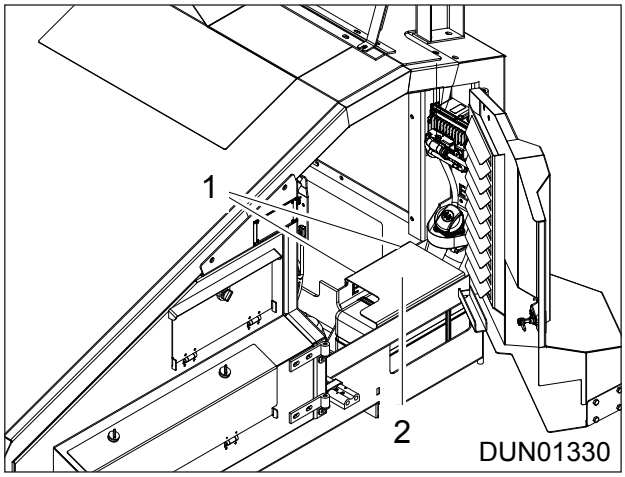

Figure 9.44 - DEF Tank Cover

1. Remove the 2 bolts (Item 1;) securing the DEF Tank cover in place and remove the cover (Item 2).

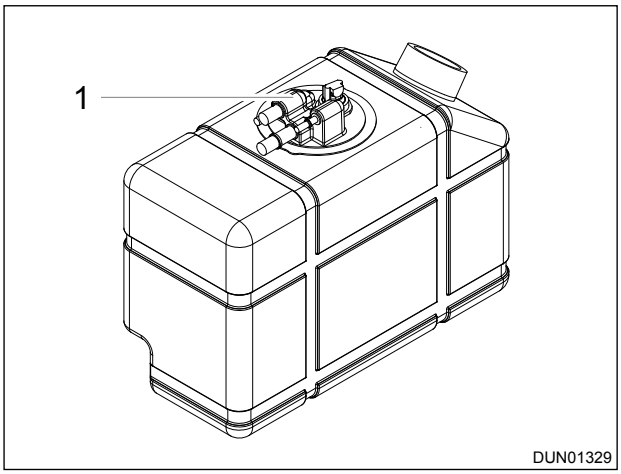

Figure 9.45 - DEF Manifold Filter

2. Un-clip the hoses and the sensor from the top of the DEF Manifold (Item 1).
3. Remove the 2 screws securing the Manifold to the top of the tank and lift it out.

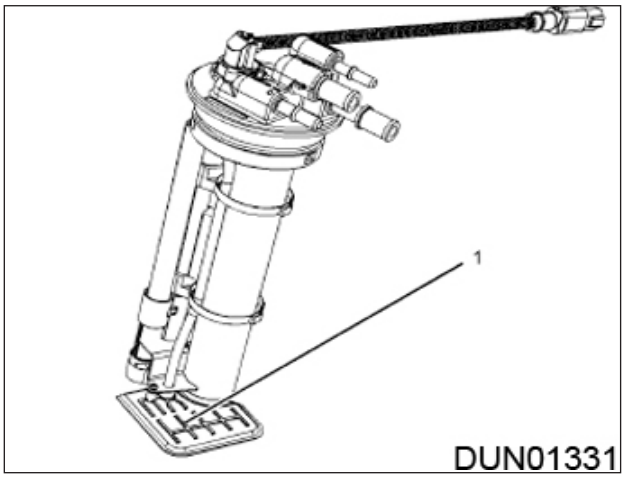

Figure 9.46 - DEF Manifold Filter

4. Remove the filter (Item 1) and replace with a new one.
5. Insert the Manifold back in to the tank and secure in place with the 2 screws.
6. Reattach all the hoses and the sensor.

(e) DEF Tank Flush

⚠ WARNING

Wear personal protective equipment.

Switch off the machine and implement the lockout and tagout procedure.

Hot Surface Hazard

Beware of hot DEF and surfaces.

DEF is corrosive and therefore must be stored in tanks constructed of approved materials. (Refer to engine manual for more details)

Care should be taken when dispensing DEF. Spills should be cleaned immediately. All surfaces should be wiped clean and rinsed with water.

DEF that has been split will crystallize when the water within the liquid evaporates. Split DEF will attack paint and metal. If DEF is split, wash the area with water immediately.

Caution should be used when dispensing DEF near an engine that has recently been running. Spilling DEF onto hot components may cause the release of ammonia vapours. Do not breathe ammonia vapours. Do not clean up any spills with bleach.

NOTICE

If contamination of the Diesel Exhaust Fluid (DEF) is suspected, the DEF tank (2) will need to be drained and the DEF tank flushed.

Ensure that the vessel that will be used is large enough to collect the fluid to be drained.

Dispose of the drained fluid in accordance with local regulations.

PROCEDURE

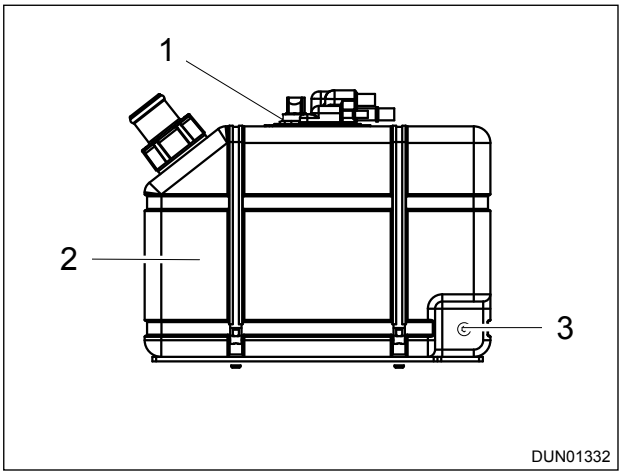

Figure 9.47 - DEF Drain Plug

1. Ensure that the purging of the DEF system has been completed.
2. Position a suitable vessel below the drain plug (Item 3). Remove the tank filler cap.
3. Remove the drain plug and allow the fluid to drain.
4. Remove the Manifold (DEF Header) (Item 1) after draining the fluid to change the manifold filter.
5. Install the drain plug (Item 3). Tighten the drain plug to a torque of 6 Nm (53 lbin). Remove the vessel used for draining.
6. Reinstall the Manifold in to the tank.
7. Refill the DEF tank.

(f) Filling the DEF Tank

⚠ WARNING

Wear personal protective equipment.

Switch off the machine and implement the lockout and tagout procedure.

Hot Surface Hazard

Beware of hot DEF and surfaces.

DEF is corrosive and therefore must be stored in tanks constructed of approved materials. (Refer to engine manual for more details)

Care should be taken when dispensing DEF. Spills should be cleaned immediately. All surfaces should be wiped clean and rinsed with water.

DEF that has been split will crystallize when the water within the liquid evaporates. Split DEF will attack paint and metal. If DEF is split, wash the area with water immediately.

Caution should be used when dispensing DEF near an engine that has recently been running. Spilling DEF onto hot components may cause the release of ammonia vapours. Do not breathe ammonia vapours. Do not clean up any spills with bleach.

NOTICE

If contamination of the Diesel Exhaust Fluid (DEF) is suspected, the DEF tank will need to be drained and the DEF tank flushed.

Before filling the DEF tank, ensure that the DEF lines have been purged. Purging of the DEF lines will take place, after the engine has stopped. Only after purging the DEF lines should the DEF tank be filled. For more information on the time taken for purging the DEF lines, refer to the Engine Operation and Maintenance Manual.

Ensure that the tank is full before starting work.

Do not over fill the tank. The DEF will require room for expansion.

PROCEDURE

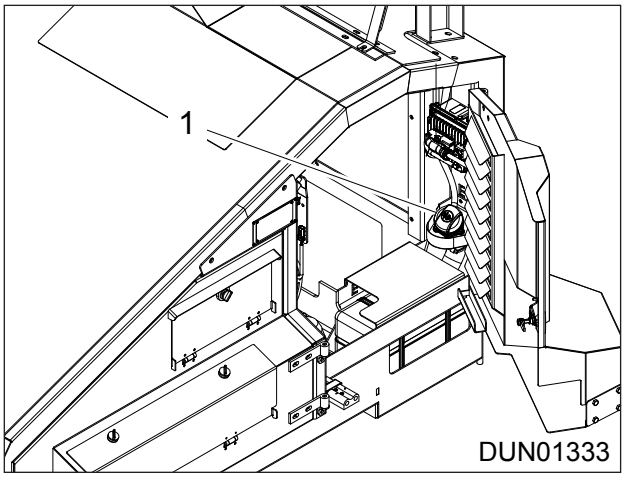

Figure 9.48 - DEF Tank Filler Cap

1. Ensure that the DEF cap (Item 1) and the surrounding area is clean and free from dirt. Ensure that all equipment used in filling the tank is clean and free from dirt.
2. Remove the DEF filler cap.
3. Fill the tank with the required amount of DEF. Ensure that dirt is not introduced into the tank during filling.
4. Reinstall the DEF filler Cap.
5. Visually inpect the DEF tank for any signs of leakage.

9.14 Inspecting the Clean Emissions Module Supports

⚠ WARNING

Wear personal protective equipment.

Switch off the machine and implement the lockout and tagout procedure.

Hot Surface Hazard

Beware of hot surfaces on and around the engine.

PROCEDURE

1. Observe all safety warnings.
2. Open the power unit doors to gain access to the Clean Emissions Module.

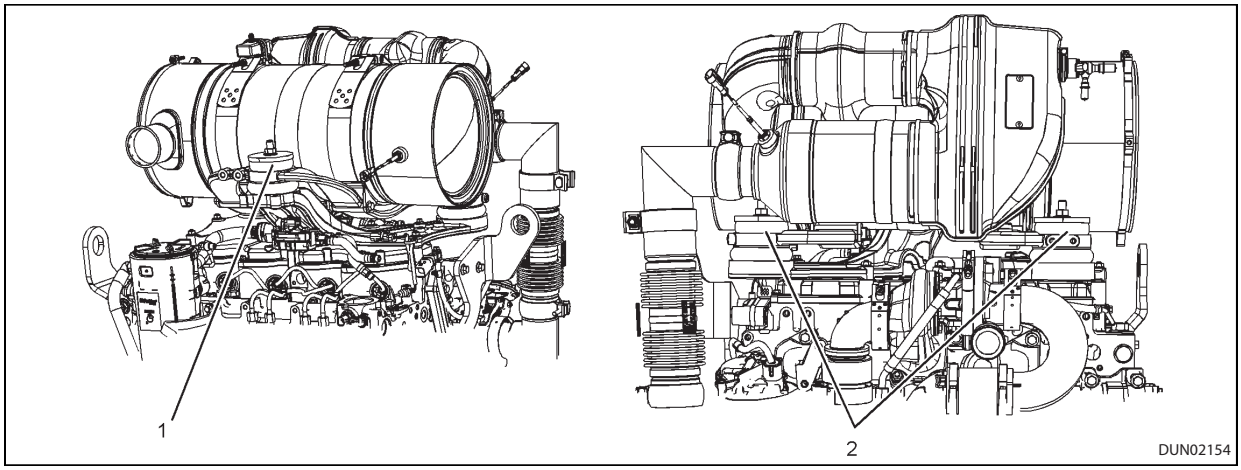

Figure 9.49 - Clean Emissions Module Mounts

3. Inspect mounts (Item 2) for wear or damage.
4. Inspect mounts (Item 1).
5. If wear or damage is found the mounts must be replaced.
6. *Refer to Engine Manual for detailed instructions on this procedure.*

9.15 Changing Air Filters

(1) Air Filtration

The air required to run the engine is inducted into the engine after passing through a filtration system. As air passes into the breather system it is initially met by the first filter known as the precleaner. This removes the heaviest of the dust,some of which escapes through a vent at the bottom or at the back of the precleaner.

The air then passes through the outer filter which removes more dust and than finally the air passes through the inner air filter. This filtration system removes virtually all the dust being inducted into engine.

(2) Check Both Air Cleaner Elements

NOTICE

It is recommended that air cleaner elements are not cleaned or reused but replaced with new items.

Do not run the engine with the cover (Item 3) removed.

PROCEDURE

1. Observe all safety warnings.
2. Ensure machine is switched off, locked out and tagged out, Remove the ignition key and carry it with you.
3. Release the tension clips (Item 4) at side of the outer cover (Item 5).
4. Remove the outer cover.
5. Carefully remove outer filter (Item 3) and inner filter (Item 2).
6. Discard the elements if they are distorted.
7. Hold each element up to the light to check for damage to the paper. The elements should be discarded if pin pricks of light can be seen or if there are areas of paper that appear thin.
8. Refit new or existing elements as required.

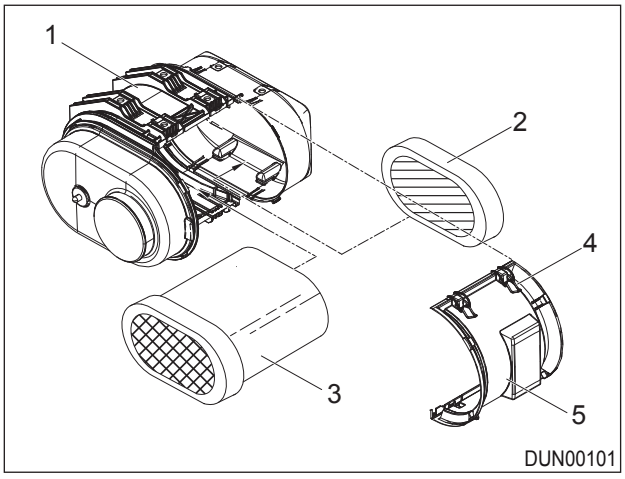

Figure 9.50 - Air Cleaner Elements

(3) Changing the Air Cleaner Elements

NOTICE

It is recommended that air cleaner elements are not cleaned or reused but replaced with new items.

Do not run the engine with the filter cover (Item 3) removed.

If the outer element has not been changed for 500 operating hours, a leak in the induction system must be suspected. Check that the air cleaning casing and hoses to the engine are not damaged. Check that all hose connections are airtight.

PROCEDURE

1. Observe all safety warnings.
2. Ensure machine is switched off, locked out and tagged out, Remove the ignition key and carry it with you
3. Release the tension clips (Item 4) at the side of the cover (Item 5).
4. Remove the cover (Item 5).
5. Carefully remove the outer filter (Item 3), minimizing the amount of dust spilled.
6. Remove the inner element (Item 2).
7. Clean the inside of the air cleaner casing using a damp, lint free cloth.
8. Fit a new inner filter element (Item 2).
9. Fit a new outer filter element (Item 3).
10. Replace the outer cover (Item 5) and fasten the tension clips (Item 4).

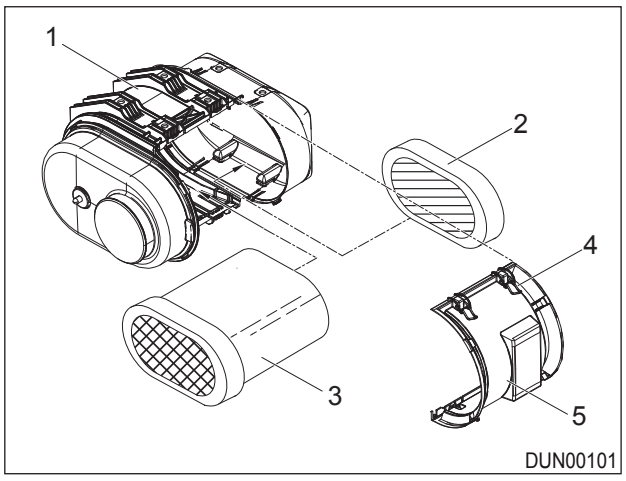

Figure 9.51 - Engine Air Filter

9.16 Coolant System

⚠ WARNING

Toxic Hazard

Ethylene glycol is highly hazardous, it can also cause skin irritation and eye damage. Ensure that used coolant is disposed of in an environmentally safe manner.

Burn Hazard

Hot coolant can cause serious burns. To open the coolant system, stop the engine and wait until system has cooled. Remove filler cap slowly to relieve pressure.

When changing coolant, ensure that engine has cooled completely before carrying out maintenance procedure.

NOTICE

Never fill a large amount of cold coolant in a hot engine. There is great risk of cracks forming in the cylinder block and cylinder heads.

(a) Engine Coolant Level

(For more details of engine coolant level view the engine operators manual)

⚠ WARNING

Switch off and lockout before working at a machine.

Beware of scalds from hot water under pressure.

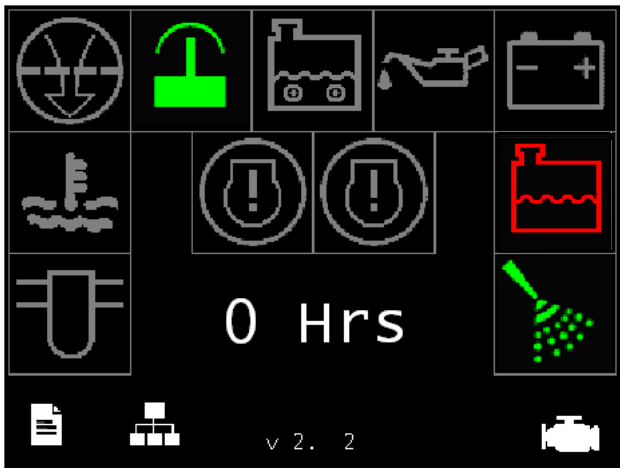

Figure 9.52 - MCU 300 Panel - Low Coolant Level Indicator (Tier 3)

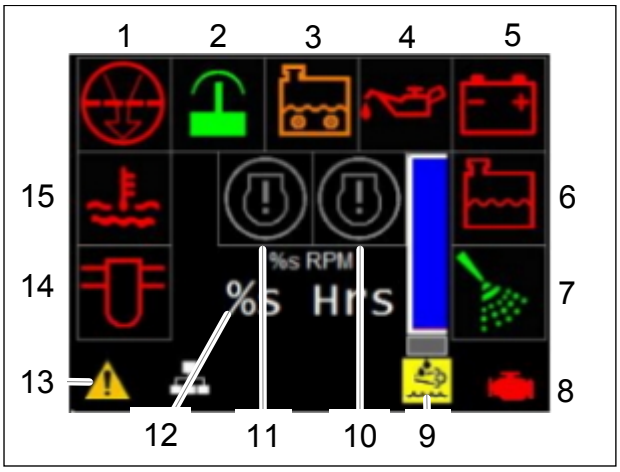

Figure 9.53 - MCU 300 Panel - Low Coolant Level Indicator (Tier 4)

If the engine coolant level indicator (Item 6) illuminates on the control panel the radiator must be topped up. Refer to Engine Manual for Fill and Bleed procedures.

(1) Topping up Coolant Level

Refer to Engine Manual for Fill and Bleed procedures.

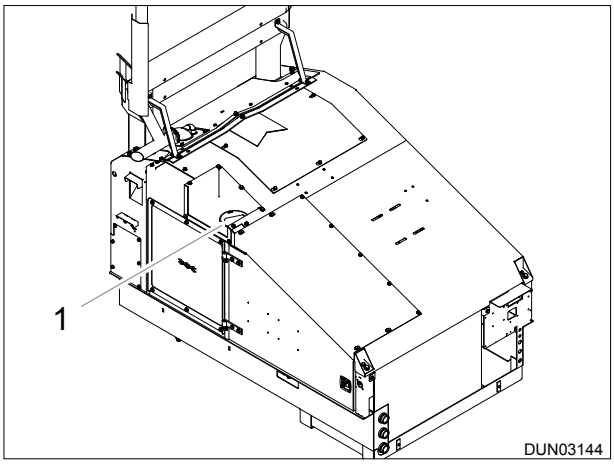

Figure 9.54 - Engine Inspection Doors

PROCEDURE

1. Turn off the engine.
2. Carefully open the radiator cap (Item 1) through the hole located on top of the power unit.
3. Fill the radiator with coolant.
4. Check the indicator on the control panel to ensure the indicator is no longer illuminated.

9.17 Priming the Fuel System

(1) Electric Fuel Pump Priming

⚠ WARNING

Wear personal protective equipment

Diesel fuel is highly flammable.

Do not smoke or carry out maintenance on the fuel system near open flame or sources of sparks, such as welding equipment, etc.

NOTICE

Do not crank the engine continuously for more than 30 seconds. Allow the starting motor to cool for two minutes before cranking again.

If air enters the system, the air must be purged from the fuel system buffer the engine can be started.

Do not loosen the high pressure fuel line in order to purge air from the fuel system. This procedure is not required.

After the engine has stopped, you must wait for 60 seconds in order to allow to allow the fuel pressure to be purged from the high pressure fuel lines before any service or repair is performed on the engine or fuel lines.

PROCEDURE

1. Ensure the fuel system is in working order and that the fuel supply is switched on.
2. Turn the ignition key to the ‘ON’ position (Item 2).

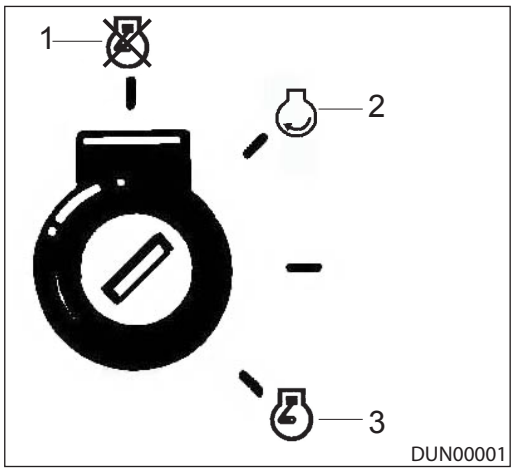

Figure 9.55 - Key Positions

3. This allows the electric priming pump to operate. Operate the electric priming pump. The ECM will stop the pump after 2 minutes.
4. Turn the ignition key to the ‘OFF’ position (Item 1). The fuel system should now be primed and the engine should be able to start.
5. Turn the ignition key to the crank position (Item 3)

   » The engine will crank and start after the warning siren has sounded for approximately 7 seconds.

6. After the engine has started, operate it at low idle for a minimum of 5 minutes, immediately after the air has been removed from the fuel system. This will help ensure that the fuel system is free of air.
7. Ensure that the fuel system is free of leaks.

(2) Manual Fuel Pump Priming

⚠ WARNING

Wear personal protective equipment

Diesel fuel is highly flammable.

Do not smoke or carry out maintenance on the fuel system near open flame or sources of sparks, such as welding equipment, etc.

NOTICE

Do not crank the engine continuously for more than 30 seconds. Allow the starting motor to cool for two minutes before cranking again.

If air enters the system, the air must be purged from the fuel system before the engine can be started.

Do not loosen the high pressure fuel line in order to purge air from the fuel system. This procedure is not required.

After the engine has stopped, you must wait for 60 seconds in order to allow to allow the fuel pressure to be purged from the high pressure fuel lines before any service or repair is performed on the engine or fuel lines.

PROCEDURE

1. Ensure the fuel system is in working order and that the fuel supply is switched on.

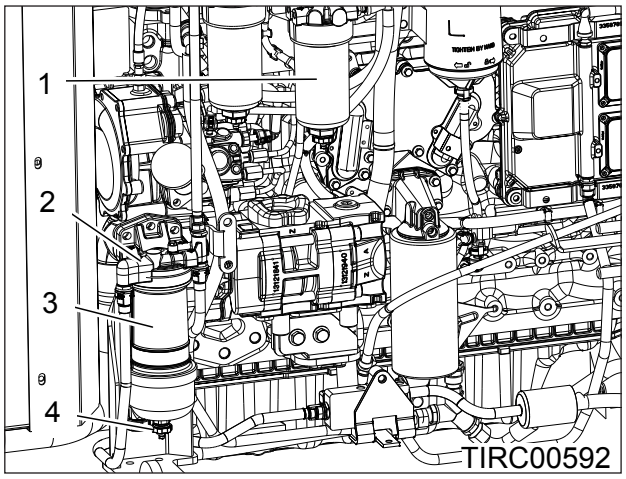

Figure 9.56 - Fuel Priming Pump

2. Operate the fuel priming pump (Item 2). Count the number of operations of the priming pump. After 100 depressions of the priming pump, stop.
3. The fuel system should now be primed and the engine should be able to start.

4. Turn the ignition key to the crank position (Item 3)

   » *The engine will crank and start after the warning siren has sounded for approximately 7 seconds.*

5. After the engine has started, operate it at low idle for a minimum of 5 minutes, immediately after the air has been removed from the fuel system. This will help ensure that the fuel system is free of air.

6. Ensure that the fuel system is free of leaks.

(3) Fuel System Prime (Tier 3 CAT4.4 83KW Mechanical Engines)

If air enters the fuel system, the air must be purged from the fuel system before the engine can be started. Air can enter the fuel system when the following events occur:

- The fuel tank is empty or the fuel tank has been partially drained.
- The low pressure fuel lines are disconnected.
- A leak exists in the low pressure fuel system.
- The fuel filter is replaced.

⚠ CAUTION

NEVER leave your product unattended whilst it is in operation.

Diesel fuel is highly flammable and is an explosion/burns hazard. NEVER remove the filler cap or refuel, with the engine running. NEVER add gasoline, petrol or any other fuel mixes to diesel because of increased fire or explosion risks.

DO NOT smoke while refilling or carrying out maintenance on the fuel system.

DO NOT carry out maintenance on the fuel system near naked lights or sources of sparks, such as welding equipment.

NOTICE

Unless the cause of the air in fuel has been rectified, it is likely that any replacement fuel injection pump will have a problem in a short space of time. Ensure that the source of the air leak in the fuel system has been located and rectified. Ensure that the fuel system has been primed in order to ensure that there is no trapped air in the fuel system.

The fuel injection pump can be damaged by trapped air.

Air that is present in the fuel can collect in the fuel injection pump. If the hydraulic damping for the fuel is not effective the movement of the automatic advance piston is uncontrolled. This can damage the cover plate, the O-ring seal and the fasteners. Investigations have shown that this can lead to fuel leaks. In extreme cases, the advance piston travel can shear the cover screws.

Problems can occur within a few hours of the start up of the engine, depending on the duty cycle and the amount of air in the fuel.

Do not crank the engine continuously for more than 30 seconds. Allow the starting motor to cool for two minutes before cranking the engine again.

Use the following procedure to remove air from the fuel system.

PROCEDURE

1. Turn the key switch to the RUN position.
2. Leave the key switch in the RUN position for three minutes. If a manual purging screw is installed, the purging screw should be slackened during priming the fuel system.
3. Crank the engine with the throttle lever in the CLOSED position until the engine starts.
4. If necessary, loosen the union nuts (Item 1) on the fuel injection lines at the connection with the fuel injector until fuel is evident. Stop cranking the engine. Tighten the union nuts (Item 1) to a torque of 30 N•m (22 lb ft).

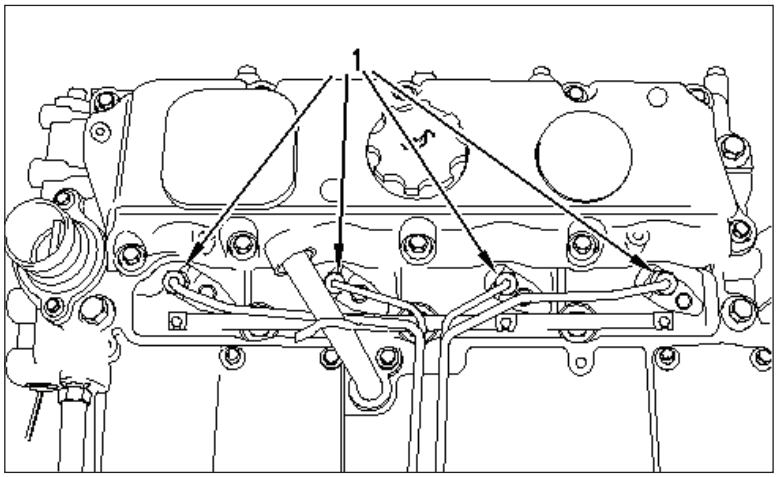

Figure 9.57 - Union Nuts

5. Start the engine and run the engine at idle for one minute.
6. Cycle the throttle lever from the low idle position to the high idle position three times. The cycle time for the throttle lever is one second to six seconds for one complete cycle.
7. In order to purge air from the fuel injection pump on engines with a fixed throttle, the engine should be run at full load for thirty seconds. The load should then be decreased until the engine is at high idle. This should be repeated three times. This will assist in removing trapped air from the fuel injection pump.
8. Check for leaks in the fuel system.

9.18 Fuel Level and Topup

⚠ DANGER

NEVER leave your product unattended whilst it is in operation.

Diesel fuel is highly flammable and is an explosion/burns hazard. NEVER remove the filler cap or refuel, with the engine running. NEVER add gasoline, petrol or any other fuel mixes to diesel because of increased fire or explosion risks.

DO NOT smoke while refilling or carrying out maintenance on the fuel system.

DO NOT carry out maintenance on the fuel system near naked lights or sources of sparks, such as welding equipment.

⚠ WARNING

Read and understand manual.

Lock-out machine.

Wear personal protective equipment.

Diesel fuel is highly flammable.

Never remove filler cap or refuel, with the engine running.

Never add gasoline or any other fuel mixes to diesel because of increased fire or explosion risks.

NOTICE

Ultra low sulfur diesel must be used in machines with CAT Tier 4 engines.
The use of fuel additives is not recommended. Additives may not be compatible with the fuel.

Do not fill the tank to overflow or full capacity.

Allow room for expansion and wipe up spilled fuel immediately.

Preferably re-fuel at the end of each day where possible, to reduce overnight water condensation within the tank.

PROCEDURE

1. Observe all safety warnings.
2. Check the fuel level gauge / indicator.
3. Clean the area around the filler cap.
4. Remove the filler cap (Item 1) and top up fuel level as required with specified diesel fuel. Refer to the engine manufacturer's operation manual.
5. Preferably re-fuel at the end of each day where possible, to reduce overnight water condensation within the tank.
6. Replace the filler cap and close the door if applicable.
7. If required, switch on the ignition briefly to check the fuel gauge.

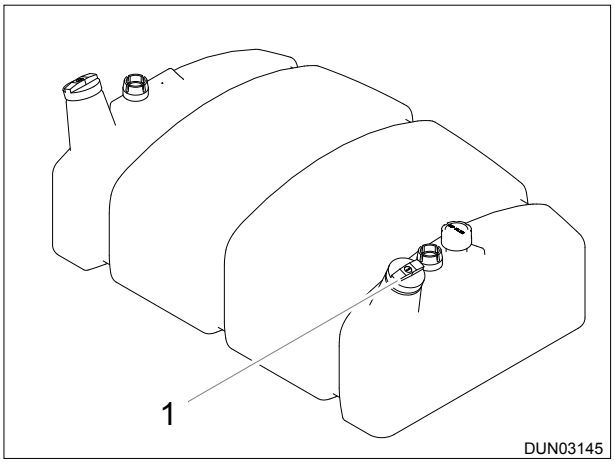

Figure 9.58 - Fuel Tank

9.19 Track Maintenance

DANGER

Nip Point Hazard

Hazardous nip points exist.

Under no circumstances must the machine be running when preforming the following tasks. Failure in doing so may result in serious injuries.

WARNING

Wear personal protective equipment.

Fall hazard.

Switch off the machine and implement the lockout and tagout procedure.

NOTICE

Stop the machine for 30 minutes after tracking it continuously for 30 minutes, to allow the components to cool down. Never track the machine constantly for more than 30 minutes without providing adequate rest.

When travelling up a gradient, the tracks should be driven forward (i.e. idlers first, drive sprocket to the rear). When travelling down a gradient, tracks should be driven sprocket first. Do not manoeuvre the machine on a gradient steeper than 30 degrees.

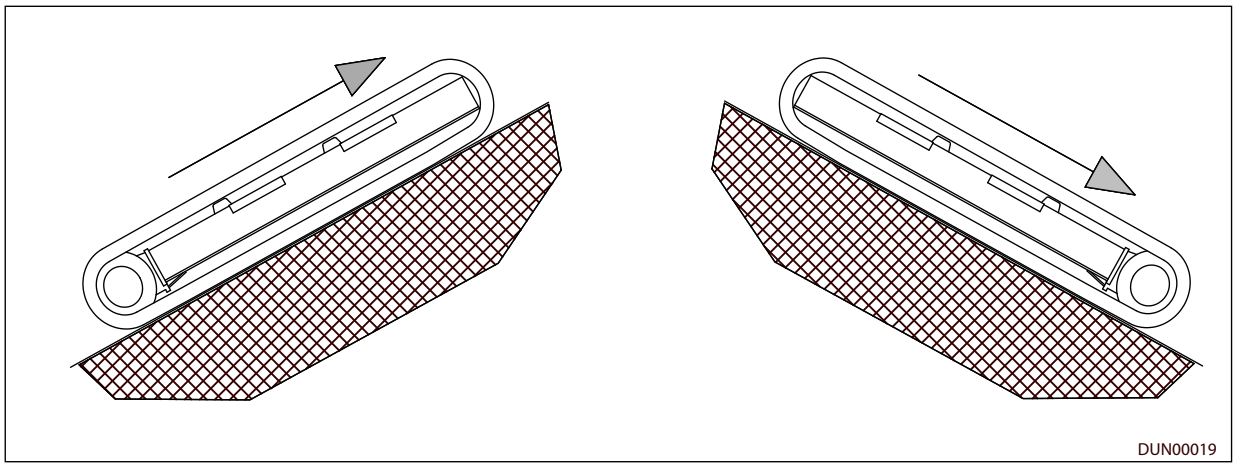

Figure 9.59 - Tracking Uphill and Downhill

Avoid manoeuvring the machine over extremely uneven ground. Ensure the terrain that the machine is working on is firm enough to adequately support the machine.

Always park the machine on flat, level ground. If it is necessary to park the machine on a gradient, the tracks should be solidly blocked.

Never attempt to track the machine if there is any build up of material around the tracks and drive sprockets or if the tracks are frozen to the ground.

Ensure the machine is tracked at least 10 m in either direction on a daily basis, to minimise risk of track chain seizure.

Ensure no leakage of oil from gearbox, roller and idler before and during tracking.

Always:

- Park the machine on flat, level ground. If it is necessary to park the machine on a gradient, the tracks should be solidly blocked
- Ensure the terrain the machine is working on is firm enough to adequately support the machine.
- Ensure the machine is tracked at least 10 m in either direction on a daily basis, to minimise risk of track chain seizure.
- Ensure the track systems are free from debris before moving the machine.
- Ensure the tracks are not frozen to the ground before moving the machine.
- Ensure no leakage of oil from gearbox, roller and idler before and during tracking.
- When tracking for 30 minutes stop tracking and allow 30 minutes for the track gearboxes to cool down.

Never:

- Attempt to track the machine if there is any build up of material around the tracks and drive sprockets.
- Attempt to track the machine if the tracks are frozen to the ground.
- Push or tow the machine when unable to free itself.
- Track the machine constantly more than 30 minutes without providing adequate rest.

(1) Machine Tracks

NOTICE

To maximise the life of the track, keep it movable and avoid damage, the machine should be moved at least every week, by a distance exceeding four times the track length. It should also be parked on level ground overnight and during periods to of non-usage. This is particularly important when working in adverse conditions.

It is essential that the tracks are correctly tensioned at all times. Check track tension regularly.

Moving the machine with incorrectly tensioned tracks can cause severe damage to the undercarriage components and may invalidate the warranty.

PROCEDURE

1. Keeping the track correctly adjusted will increase the service life of the track and drive components.
2. Frequently check for loose bolts, oil leaks, master pins are correctly located and tight, general wear and damage, correct track tension, etc. to ensure safe working and long life.
3. Always check the tracks prior to manoeuvring the machine.

(2) Cleaning the Tracks

NOTICE

Pay attention to material build up around sprocket, idlers, lower rollers, top chain guides and chain links. DO NOT attempt to track the machine if material has built up around the tracks as this will invalidate the warranty.

PROCEDURE

1. Observe all safety warnings.
2. On a daily basis the tracks should be hosed down to dislodge any build up of material on the tracks.

(3) Measuring Track Tension

⚠ WARNING

Prior to attempting any manoeuvring of the machine, the tracks must be free of obstructions, including crushed material and fines. Do not push or tow the machine. Failure to observe this warning could result in injury to persons and damage to the machine which invalidates warranty.

Switch off the machine and implement the lockout and tagout procedure.

NOTICE

It is important that the track is not tensioned too tightly as this tension places excessive loads on the gearbox grease cylinder and idler bearings. It leads to accelerated wear and premature failure.

PROCEDURE

1. Observe all Safety Warnings.
2. Position the machine on solid and level ground and drive 2 metres (2 yards) minimum in a forward direction, track idler roller leading.
3. Shut down the machine.
4. Implement the lockout and tagout procedure.
5. One track at a time, measure the sag on the top part of the track on the longest section of unsupported track by placing a ‘straight edge’ long enough to reach from the drive sprocket to the nearest skid plate.
6. Measure the maximum amount of track sag from the high point of the track to the bottom of the ‘straight edge’.

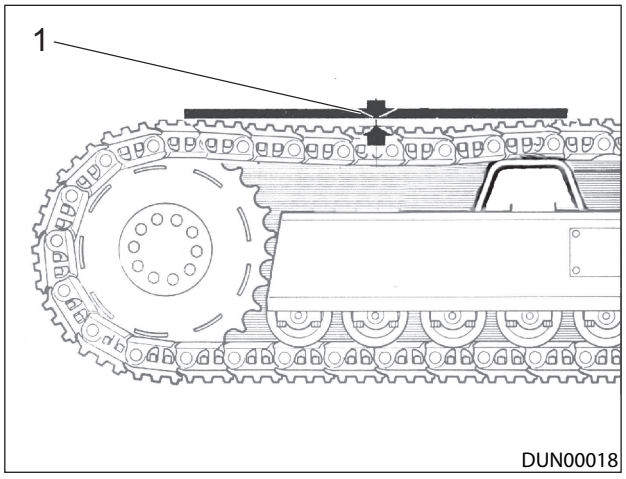

Figure 9.60 - Measuring Track Tension

7. Correctly adjusted, the sag should be within the limits set for each supplier as shown in the table.

Table 9.8 - Track Tension Limits

IDENTIFICATION	SAG VALUE
STRICKLAND	5 MM - 15 MM

8. Depending upon the need to either slacken or tension the track, proceed as follows.

(4) Adjusting Track Tension

⚠ DANGER

Grease coming out of the relief valve under pressure can penetrate the body causing injury or death; DO NOT watch the relief valve to see if grease is escaping but instead watch the track adjustment cylinder to verify that the track is being loosened.

⚠ WARNING

Fall hazard. Wear personal protective equipment.

Switch off the machine and implement the lockout and tagout procedure.

NOTICE

Do not set track tension too tight.

PROCEDURE

1. Observe all Safety Warnings.
2. Shut down the machine.
3. Implement the lockout and tagout procedure.
4. Locate the access aperture on the side of the track frame and remove the cover, where fitted, to reveal the relief valve inside.

To Release Track Tension [After measurement]:-

5. Loosen the relief valve by turning counter clockwise using gradual increments until the grease begins to be expelled. Care must be taken not to loosen the relief valve too quickly because the grease inside is under high pressure.
6. When the correct track tension has been measured, turn the relief valve clockwise to tighten and then clean away all trace of expelled grease.
7. If the track fails to slacken after the grease fitting has been loosened, do not attempt to remove the tracks or disassemble the track tensioner, or remove the grease fitting. It is possible that running the tracks with the grease fitting loosened may help to expel the grease

To Increase Track Tension [After measurement]:-

8. Connect the grease gun to the grease fitting and add grease until the track tension is within the specified dimension, see ‘Measuring Track Tension’ and refer to lubricant and fluid specifications.

Re-check Tension

9. Operate the machine in track mode and drive the machine 50 metres (50 yards) forwards and 50 metres (50 yards) backwards, check track tension and repeat the above steps if it is within the specified dimension, see ‘Measuring Track Tension’.
10. If room for manoeuvring the machine is restricted, drive the machine forwards and backwards several times over a shorter distance.

(5) Checking and Filling the Gearbox Oil Level

⚠ WARNING

Wear personal protective equipment.

Switch off the machine and implement the lockout and tagout procedure.

Dispose of oil safely and in a environmentally friendly manner.

NOTICE

Cleanliness is essential when checking, filling or replacing oil in the gearbox. Gearbox operating life will be dramatically shortened if the oil becomes contaminated. Only use new clean oil in clean containers and fillers.

The Gearbox should hold approximately 5 litres of oil, which should be filtered through a 10 micron filter before entering the gearbox.

PROCEDURE

1. Move the machine to a level surface and bring the oil drain holes to the position shown.

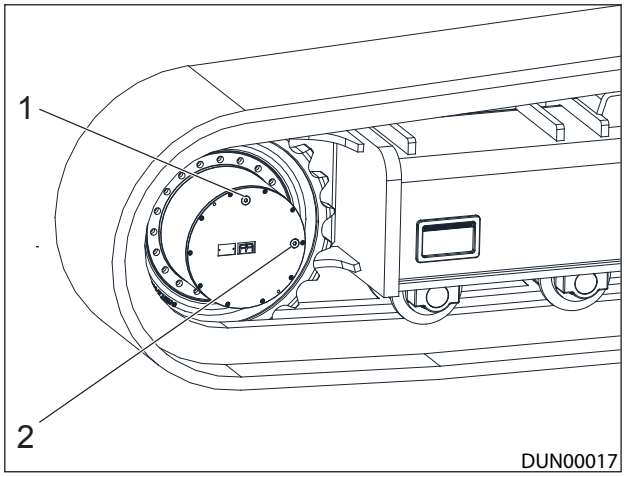

Figure 9.61 - Gearbox Fill position

2. Ensure machine is switched off, locked out and tagged out. Remove ignition key, carry it with you.
3. Thoroughly clean around both plugs removing all potential contaminants.
4. Remove both plugs.
5. Fill the oil through the upper hole (Item 1) until it runs out through the lower hole (Item 2).
6. Wait a few moments until any trapped air has escaped and then re-check the level.
7. Add more oil if necessary.

(a) Draining Gearbox Oil

⚠ WARNING

Do not move the machine any further until the gearbox oil has been replaced.

Wear personal protective equipment.

Switch off the machine and implement the lockout and tagout procedure.

Dispose of oil safely and in a environmentally friendly manner.

NOTICE

Do not move the machine any further until the gearbox oil has been replaced.

PROCEDURE

1. Move the machine to a level surface and bring the oil fill (1) and oil drain holes(2) to the position shown.

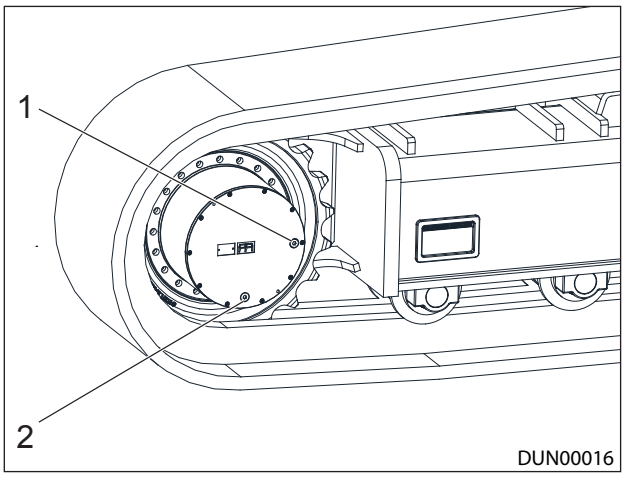

Figure 9.62 - Gearbox Drain Position

2. Ensure machine is switched off, locked out and tagged out. Remove ignition key, carry it with you.
3. Thoroughly clean around both plugs removing all potential contaminants.
4. Remove both plugs and allow the oil to drain. The oil will drain quickly if it is hot, however care should be taken to avoid burns to the operator.
5. Move the machine to bring the plugs to the fill position shown.
6. Re-fill the oil as per the procedure.

(b) Refilling the Track Gearbox Oil

⚠ WARNING

Injection hazard. Burn Hazard. Oil may be hot and under high pressure. Wear personal protective equipment.

NOTICE

Cleanliness is essential when checking, filling or replacing oil in the gearbox. Gearbox operating life will be dramatically shortened if the oil becomes contaminated. Only use new clean oil in clean containers and fillers.

The Gearbox should hold approximately 5 litres of oil, which should be filtered through a 10 micron filter before entering the gearbox.

PROCEDURE

1. Move the machine to a level surface and bring the oil drain holes to the position shown.

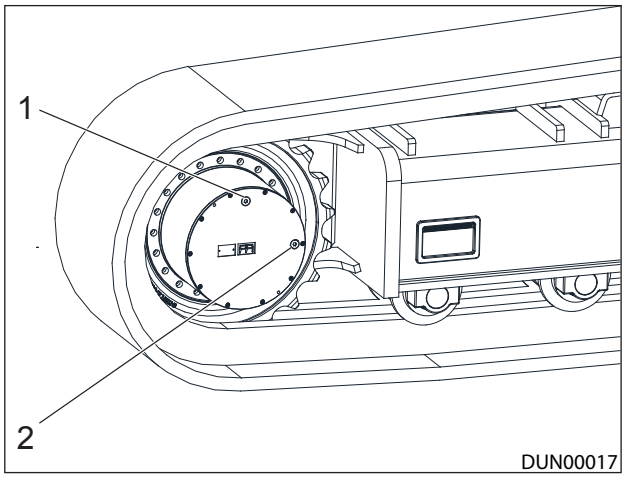

Figure 9.63 - Gearbox Fill position

2. Ensure machine is switched off, locked out and tagged out. Remove ignition key, carry it with you.
3. Thoroughly clean around both plugs removing all potential contaminants.
4. Remove both plugs.
5. Fill the oil through the upper hole (Item 1) until it runs out through the lower hole (Item 2).
6. Wait a few moments until any trapped air has escaped and then re-check the level.
7. Add more oil if necessary.
8. Replace both plugs (Items 1 and 2).

(c) Changing Track Gearbox Oil

⚠ WARNING

Injection hazard. Burn Hazard. Oil may be hot and under high pressure. Wear personal protective equipment.

NOTICE

Cleanliness is essential when checking, filling or replacing oil in the gearbox. Gearbox operating life will be dramatically shortened if the oil becomes contaminated. Only use new clean oil in clean containers and fillers.

The Gearbox should hold approximately 5 litres of oil, which should be filtered through a 10 micron filter before entering the gearbox.

PROCEDURE

1. Move the machine to a level surface and bring the oil drain holes to the position shown.

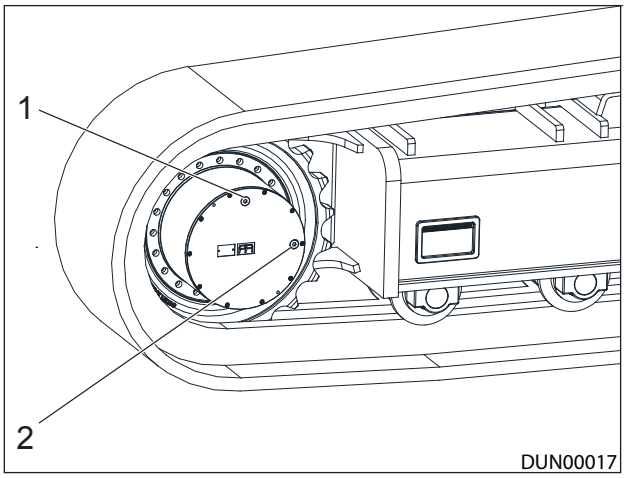

Figure 9.64 - Gearbox Fill position

2. Ensure machine is switched off, locked out and tagged out. Remove ignition key, carry it with you.
3. Thoroughly clean around both plugs removing all potential contaminants.
4. Remove both plugs.
5. Allow the oil to drain into a suitable container large enough to hold all of the oil.
6. Startup the machine.
7. Refill the track gearbox oil.

9.20 Electrical Maintenance

(1) Electrical Safety instructions

⚠ WARNING

Wear personal protective equipment.

DO wear protective eye wear, clothing and gloves. DO NOT expose the battery to flame, sparks, or incendiary devices, including cigarettes.

Switch off the machine and implement the lockout and tagout procedure.

Explosion Hazard. The battery contains sulphuric acid, electrolyte which can cause severe burns and produce explosive gasses. Avoid contact with the skin, eyes or clothing.

Electrocution hazard. Always disconnect the battery leads before carrying out any maintenance to the electrical system.

Switch off the machine immediately if malfunctions occur in the electrical system.

Before beginning work on any of the machines electrical components, any power supplied to the machine (whether the battery or a power line) must be cut-off by disconnecting or de-energizing

Before starting any work, check the machine and the electrical parts to be worked on for the presence of power. Ground or short-circuit the parts to be worked on to prevent the possibility of an electrocution hazard.

Before starting any work disconnect any power.

Insulate any live parts which cannot be de-energized to prevent the possibility of an electrocution hazard.

Always use insulated tools when working on the electrical systems.

The electrical equipment of the machine is to be inspected and checked at regular intervals.

Defects such as loose connections or scorched or otherwise damaged components must be rectified immediately.

The battery should be lifted out with extreme care. Do not tip or drop the battery. Many newer batteries are made with a handy strap. This should be used to lift the battery if available.

Work on the electrical system and equipment of the machine must be carried out by a skilled electrician or by instructed persons under the supervision and guidance of a skilled electrician and in accordance with electrical engineering rules and regulations.

NOTICE

Refer to Appendix for electrical schematics.

DO NOT lay tools across the top of the battery. A conductive metal might touch both terminals simultaneously causing a short, sparks, or a potential explosion.

Extreme care should be taken when removing the battery. Do not tip or drop the battery. Many newer batteries are made with a handy strap handles.

Dumping the battery will be a hazard to the environment. Dispose if the battery by special disposal or at a recycling centre

When purchasing a new battery, confirm that the negative and positive terminal posts are on the same side of the battery as your old one.

(2) Check the Battery

⚠ WARNING

Wear personal protective equipment.

Electrocution hazard.

Switch off the machine and implement the lockout and tagout procedure.

⚠ CAUTION

Always disconnect battery leads before carrying out any maintenance to the electrical system.

The battery contains sulphuric acid, electrolyte which can cause severe burns and produce explosive gasses. Avoid contact with the skin, eyes or clothing.

NOTICE

In cold weather, distilled water should only be added immediately before starting the engine, to prevent it freezing.

PROCEDURE

1. Observe all safety warnings.
2. Ensure that all electrical connections are clean and tight and coat the terminals with petroleum jelly to protect them from corrosion.
3. Remove the battery filler plugs and check that the electrolyte level is between 6 and 9 mm (0.25 - 0.37 ins) above the tops of the separators.
4. If necessary, fill up with distilled water.
5. Where batteries have trough fillers, add distilled water to the filling trough until the trough just begins to fill with water.

(3) Battery Removal

⚠ WARNING

Wear personal protective equipment.

Electrocution hazard.

Switch off the machine and implement the lockout and tagout procedure.

⚠ CAUTION

Always disconnect battery leads before carrying out any maintenance to the electrical system. The battery contains sulphuric acid, electrolyte which can cause severe burns and produce explosive gasses. Avoid contact with the skin, eyes or clothing.

PROCEDURE

1. Observe all safety warnings.
2. Ensure all electrical circuits are switched off.
3. Unlock battery bottom cover.
4. Remove battery box cover.
5. Disconnect the ground (-) lead from the battery.
6. Disconnect the positive (+) lead from the battery.
7. Lift the battery from the machine.

(4) Battery Installation

⚠ WARNING

Wear personal protective equipment.

Electrocution hazard.

Switch off the machine and implement the lockout and tagout procedure.

PROCEDURE

1. Observe all safety warnings
2. Ensure all electrical circuits are switched off
3. Lift the battery onto the machine.
4. Connect the positive (+) lead.
5. Connect the ground (-) lead.
6. Replace battery box cover.
7. Lock battery box cover.

(5) Changing Fuses

PROCEDURE

1. Observe all safety warnings. Ensure machine is switched off, locked out and tagged out. Remove ignition key, carry it with you.
2. For additional protection, disconnect both battery terminals.
3. Unlock fuse box at lock on front of control panel, turning one quarter revolution clockwise.
4. Identify which fuse is to be changed, using fuse relay diagram (appendix).
5. Grip fuse carefully using needle nose pliers or preferably with plastic fuse removal tweezers.

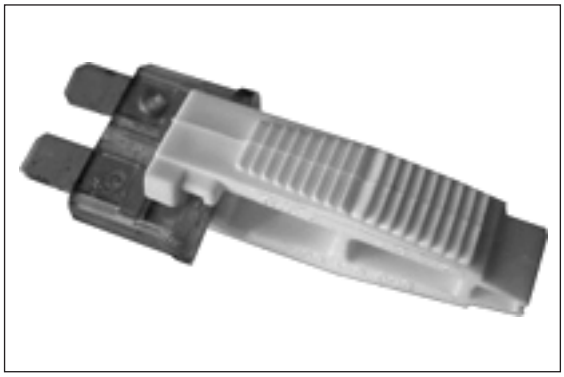

Figure 9.65 - Plastic Fuse Removal Tweezers

6. Check fuse to see if it is blown, a blown fuse should have a gap in the ampoule.

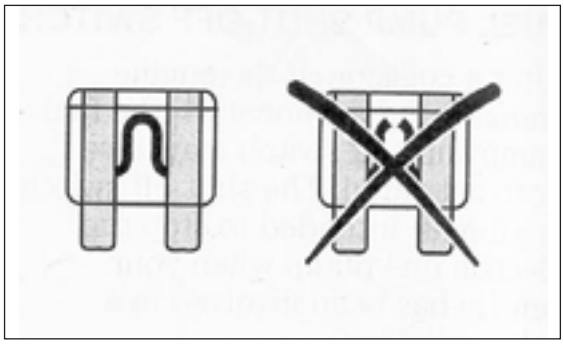

Figure 9.66 - Blown Fuse

7. Insert new fuse into fuse box.
8. Close fuse box, start machine and test if new fuse corrects the original problem.

Table of Content

10 Troubleshooting 10-2
10.1 General Troubleshooting 10-2
10.2 Conveyors Troubleshooting 10-3
10.3 Screen Troubleshooting 10-4
10.4 Components Troubleshooting 10-6
10.5 Hydraulic Troubleshooting 10-7
10.6 Production Troubleshooting 10-8
10.7 Tracks Troubleshooting 10-9
10.8 Electrical Troubleshooting 10-11
10.9 Engine Troubleshooting 10-13
10.10 Engine Fault Codes 10-20
10.11 Machine Fault Codes and Descriptions 10-31

10 Troubleshooting

NOTICE

The information included in this document is intended for experienced personnel familiar with this type of equipment. Only trained and competent personnel should perform the work outlined in this document.

Operation and maintenance of the machine must be done in accordance with the instructions in the operation manual for the machine.

The diagnostic codes may alert the operator to conditions that may damage the machines components. Never ignore a Machine fault if one occurs. Always investigate thoroughly or if in doubt contact your Terex supplier.

10.1 General Troubleshooting

Fault	Cause	Correct Measure
Machine Stops	Fuel	Top up as necessary
	Coolant level	Top up as necessary
	High coolant temperature	Clean Radiator / check fan operation
	Hydraulic oil level	Top up as necessary
	High Hydraulic oil temperature	Clean oil cooler / Replace
	Emergency stop depressed	Check all Emergency stops

10.2 Conveyors Troubleshooting

Fault	Cause	Correct Measure
Drive drum turns but belt does not move	Too much load on belt	Reduce load on belt
	Incorrectly tensioned belt	Tension belt
	Worn belt	Replace belt
	Worn drum lagging	Replace drum lagging
	Rollers cannot rotate freely	Clean/check/replace rollers
Belt completely stopped	Material jam	Remove material jam
	Taperlock is not tight or broken	Tighten or replace taperlock
Belts are tracking off	Machine is not level	Ensure machine is on level ground
	Belts are not aligned	Align belts
	Belts are not being fed evenly, material is tending to be fed to one side of the conveyor	Ensure conveyor is fed more evenly
Material collects under belt	Conveyor belt is loose	Tighten or replace as necessary
	Conveyor belt misaligned	Align conveyor belt
	Skirting rubbers not adjusted	Adjust skirting rubbers
Feeder conveyor is not moving	Feeder kickout circuit has been activated	Allow material in drum to be processed before re-engaging control
Rumbling noise from bearing	Bearing lacking lubricant	Follow greasing procedure
	Incorrectly aligned bearing	Align bearing
	Bearing is damaged	Replace bearing
Screeching noise when conveyor is running	Conveyor belt wedged or rubbing against fixed parts	Clear obstruction, adjust and align conveyor belt
	Belt scraper too tightly placed against belt	Re-adjust belt scraper

10.3 Screen Troubleshooting

Fault	Cause	Correct Measure
Screen Starts Slow (if applicable)	Drive belt slipping	Tighten belt; replace worn belt
	In cold weather, wheel case oil may be too heavy	Check
	Motor may be weak	Consult licensed electrician
Screen Spillage	Screen angle too steep	Set it to run at a more shallow angle
	Screen speed too fast	Set it to run slower
	Worn screen rubbers or curtain	Replace screen rubbers or curtain
	Stroke is too long	Reduce stroke length, if possible
Screen decks overflowing	Screen is overloaded	Decrease feed of material
Rock Moves Down One Side of screen	Screen not laterally (side-to-side) level	Level screen
	Feed is introduced to one side of the screen only	Check in feed conveyor
Rock moves across screen too fast	Screen angle too steep	Decrease Screen angle
	Rpm too high	Decrease rpm but stay within stroke-speed range
	Screen base is not level	Level screen
Rock moves across screen too slow	Screen angle too shallow	Increase Screen angle
	Rpm too low	Increase rpm but stay within stroke-speed range
Excessive vibration	Loose or misaligned weights	Check counterweight bolts
	Build up of material	Remove build up and ensure build up is regularly removed
	Anti-rock stays have not been removed	Remove anti rock stays
	Meshes are not secure	Ensure all meshes, punchplate, etc are secure
	Machine and Screenbox are not level	Ensure machine and screenbox are level
	coil springs, fatigued, sagging springs bottoming out	Replace springs
	Screen shaft is not at correct speed	Correct screen shaft speed
	Bearing failure (excessive heat,excessive grease, lack of oil, or excessive movement)	Replace Bearing
	Excessive feed overloading	Co-ordinate feed loading with tuning of screenbox, adjust screen angle

Fault	Cause	Correct Measure
Screen ‘‘dead’’ on feed end	Screen is overloaded	Reduce feed.
		Check springs on feed end
		Check plug weight placement, Increase rpm, but stay within strke speed range
Deck Blinds over with clay	Wire cloth too heavy	Use smaller guage wire
	insufficient water spray	Spray more water, if possible
	Feed material has too much clay content	Clean feed material before screening
		Install a balldeck
Dirty oil spot near gear case	Leaky gearcase bolt or impulse case bolt	Retighten to 305Nm(225lb)
Product out of specification	hole in wire cloth	Replace wire cloth
	Incorrect wire cloth	Replace wire cloth
Water in the gear case	Condensation in the case	Check oil breather clearance or plugging, water entering from breather
	Leaking Wheel case bolt(in wet screening applications)	Retighten to 305Nm(225lb)

10.4 Components Troubleshooting

Fault	Cause	Correct Measure
Machine components running slowly	Obstruction (e.g stone, material build up etc	Clear obstruction
	Check general condition of machine (eg oil leaks, excessive heat, hose blockages etc)	Correct problem if possible
	Low engine speed	Correct engine speed
	Engine performance	Consult engine manual
	Low hydraulic oil level.	Top up hydraulic oil level
	Return line filter blockage	Replace return line filter
	Pre pump filter blockage	Replace suction strainer
	Loose or damaged drive couplings	Tighten/replace drive couplings
	Machine is overloaded	Check setting parameters
	Worn or damaged drive motor	Replace motor
	Worn or damaged pump	Replace pump
	Incorrect relief pressure settings	Check and correct relief pressure settings
	Pump cavitation, suction line is collapsed	Check oil level and gate valve is open fully (if applicable)
	Flow at pump is not as expected	Check flow after pump, after control valve and after motor. These values should be the same
Components do not start	Faulty switch	Check for power
		Replace switch
	PVG solenoid	Check for power
		Replace solenoid
	wiring connection (loose)	carry out visual inspection
Machine will not jack to working position	Machine is not level	Place machine on level ground
	Securing pins not removed	Remove securing pins
	Blockage along hose	Remove blockage, replace hose if necessary
	Incorrect control valve relief pressure	Correct control valve relief pressure

10.5 Hydraulic Troubleshooting

Fault	Cause	Correct Measure
Excessively noisy pump	Low oil level causing cavitation	Top up oil level
	Blockage at pre pump filter	Replace suction strainer
	Misalignment between drive source and pump	Correctly align drive source to pump
	Incorrect hydraulic oil	Drain hydraulic oil and replace with correct oil
	Hydraulic oil tank breather clogged	Disassemble and clean
	Pressure relief valve stuck in open position	Disassemble, clean or replace the spring nozzle
	Contiminated hydraulic oil	Drain tank and replace hydraulic oil
	Damaged pump	Replace pump
	Obstruction at inlet pipe	Remove obstruction
Low or erratic pressure	Contaminants in hydraulic oil	Drain tank and replace hydraulic oil
	Worn or sticking relief valve	Replace relief valve
	Dirt or chip holding valve partially open	Clean around valve. Replace valve
	Control valve relief pressure set too low	Set relief pressure to correct level
Irregular motion of the cylinder	Air mixed in the cylinder	Check the piping, hose and coupling. After checking and repair, remove air
	Filters blocked	Replace
No response from any hydraulic system	Low oil level	Top up hydraulic oil level
	Return line element is clogged (check blockage indicator)	Replace return line element
	Damaged suction line	Replace suction line pipe
	Air mixed from the suction	retighten couplings and replace the piping as necessary
	Blockage at pre pump filter	Remove and clean
	Pressure relief valve stuck in open position	Contact Terex
The pump does not start	Rotating direction error	Check the rotating direction and reconnect
	Low oil level	Top up oil level
	Pump seized	Check that the pump shaft rotates, fit replacement if faulty

Fault	Cause	Correct Measure
Machine operating slowly. No external oil leaks	Low oil level	Top up hydraulic oil level
	Incorrect hydraulic oil	Drain tank and replace hydraulic oil
	Engine performance	Consult engine manual
	Loose or damaged taperlocks	Tighten / replace taperlock
	Worn or damaged drive motor	Replace motor
	Worn or damaged pump	Replace pump
Oil in system becomes excessively hot	Pump running continously under pressure	Check for symptons of pressure build up

10.6 Production Troubleshooting

Fault	Cause	Correct Measure
Low Product Output	Not enough raw material delivered to machine	Increase feed rate.
	Not enough hauling equipment for finished product	Increase removal rate.
	Incorrect machine parameter settings	Change parameter settings
	Incorrect or worn liners	Replace liners
	Incorrect mesh fitted	Replace mesh
Product out of specification	Incorrect or worn liners	Replace liners
	Incorrect mesh fitted	Replace mesh
	Incorrect machine parameter settings	Change parameter settings

10.7 Tracks Troubleshooting

Fault	Cause	Correct Measure
One track not operating or operating slower than the other	Parameter settings	Check parameter setting within the PLC screen and adjust if necessary (independly)
	Brake jammed	Check if the brake is releasing. Fit a pressure clock to the brake hose. A pressure of at least 285 PSI / 20 bar is required to release the brakes
	Different sizes of motors fitted to tracks	Check that the same size of motors have been fitted to both tracks
	Incorrect pressure going to the brake hose caused by a problem with the motion control block possibly contamination. If a load control valve should jam due to oil-entrained debris then the likelihood is that it will not open and will not allow the motor to turn in one direction. This will cause the Host Machine to 'crab' in one direction. Swapping the valves over from one Track to the other will usually transfer the problem to the opposite direction.	Try removing the valves and cleaning them thoroughly taking care not to damage the external cavity seals.Also check the ports in the block for dirt etc. If this does not work replace the valves with new ones. Always cross-reference the part numbers on the new valves with the old valve, before fitting . It is critical that the correct valves are fitted. Valves should never be dismantled as no internal seals or parts are available.
	Brake pressure regulator valve jammed due to debris will stop the motor turning on one side	Swap the pressure regulator from the opposite block to see if the problem is in the brake valve. If the valves continue to jam then the oil in the hydraulic system is not being filtered to the required level of cleanliness.
	Motor Fault	Swap over the motors on the two tracks. If the fault is in the motor, replace with a new motor
	Faulty brake	Remove the motor and look into the gearbox for heat discolouration and/ or fragments of brake disc. If the fault is in the brakes the complete gearbox will have to be replaced.
	Faulty brake piston seals	Remove the motor. If there is hydraulic oil in the gearbox entrance then the seals are damaged. While it may be possible to replace these seals on-site we strongly recommended that a replacement gearbox is fitted and an overhaul of the damaged gearbox be carried out off-site.

Fault	Cause	Correct Measure
Excessive oil leaking around drive assembly	Seal damaged between Motion control block and motor	Remove motion control block and replace seals
	Seal damaged between motor and gearbox	Remove motor and replace seal
	Seal damage may be caused by excessive oil temperatures	Check oil operating temperature and environmental conditions
Track will not stay tensioned	Grease escaping	Check that the track adjuster grease valve is tight, has a properly fitted seal and that there is no grease leaking past it
		Check around the tensioning Cylinder for escaping grease. This will indicate that the seals are damaged in the tensioning cylinder. Replace with a new cylinder immediately
Track group running off Sprocket and / or idler	Track group too loose	Check track tension
	Excessive misalignment	Check alignment of Sprocket Idler and track rollers
	Excessive component wear	Check wear limits
	Twisted track frame	Check track frame
Track roller leaking oil	Damaged or worn seals	Replace with a new Track Roller

10.8 Electrical Troubleshooting

Fault	Cause	Correct Measure
Control panel lights up but engine does not start	Faulty ignition switch	Replace ignition switch
	Low engine oil level (warning light should be on)	Top up oil level
	Low engine coolant level (warning light should be on)	Top up coolant level
	Emergency stop bottons depressed	Check all emergency stop buttons
	Faulty starter motor relay	Replace starter motor relay
	Faulty starter motor	Replace starter motor
Control panel does not light up	Low battery voltage	Top up electrolyte level
		Charge up battery
	Fuse blown	Replace fuse
	Isolator on	turn off isolator
	Faulty ignition switch terminals	Correct connections/replace
	Damaged battery	Replace battery
Battery goes flat while engine is running	Low battery voltage	Top up electrolyte level
		Charge up battery
	Faulty Alternator	Replace alternator
	loose fanbelt	Adjust tension
	Blown fuse	Replace fuse
Battery goes flat while engine is running	Faulty starter motor relay	Replace starter motor relay
	Faulty starter motor	Replace starter motor
Track radio remote control does not work	Remote control is out of range	Move remote control to within 100 m of the machine
	Batteries are dead	Charge or replace batteries
	Control bank levers are not in the correct position	Place control levers in the correct position
	Remote control not programmed to receiver box	Program receiver box
Tracks do not operate	Control bank levers are not in the correct position	Control bank levers are not in the correct position
	Fuse blown	Replace fuse
Components do not start	Faulty switch	Check for power
		Replace switch
	PVG solenoid	Check for power
		Replace solenoid
	wiring connection (loose)	Carry out visual inspection
7 second delay warning siren does not operate	Blown fuse	Replace fuse
	Siren has been damaged	Replace siren

Fault	Cause	Correct Measure
Tipping grid remote control does not work	Remote control is out of range	Move remote control to within 100m of the machine
	Batteries are dead	Replace batteries
	Tipping grid cycle not set	Set program
	Remote control not programmed to receiver box	Program receiver box

10.9 Engine Troubleshooting

Fault	Cause	Correct Measure
Engine non-start or difficult to start	Not declutched	Check
	Battery defective or discharged	Check
	Incorrect valve clearance	Check
	Diagnostic code	Check the display for fault code and refer to engine manual for instructions
	ECM module	Check for battery voltage to ECM
	Starting aids	Check that cold start system is operating correctly
	Emergency stop switches	Check that all emergency stops are depressed and functioning correctly
	Starter motor	Remove the starter and visually inspect the drive pinion and flywheel for damage
		Check battery voltage to starter motor and solenoid, test the operation of both , replace as necessary
	Engine speed	Check and clean speed sensor electrical connections
		Check speed sensor for proper installation
	Fuel injector	Check injector electrical connection and clean as necessary
		Check for injector line leakage/ have the engine manufacturer repair as necessary
	Fuel supply	Check the fuel level, do not rely on the fuel gauge only, add fuel as necessary
		Check the fuel lines for restrictions, collapsed and pinched lines, repair / have the engine manufacturer replace as necessary
		Check fuel in the tank for contamination
		Check condition of fuel filters, replace as necessary

Fault	Cause	Correct Measure
Engine starts, but runs irregularly or fails	Fuel injection line leaks	Check / repair as necessary
	Fuel injector defective	Check / have the engine manufacturer Replace as necessary
	Air in the fuel system	Check / Replace
	Fuel filter / fuel pre- cleaner soiled	Check
	Fuel quality not as per operation manual	Check / Clean
Engine becomes excessively hot	Oil level too low	Top up
	Oil level too high	Check
	Air cleaner clogged / turbocharger	Check / Replace
	Air cleaner service switch / indicator defective	Check
	Charge airline leaking	Check / have the engine manufacturer replace
	Coolant pump defective	Check / Clean
	Coolant heat exchanger soiled	Check / Clean
	Cooling air temperature rise / heating short circuits	Check
	Ventilation line blocked (coolant heat exchanger)	Have the engine manufacturer check
	Fuel injector defective	Check / have the engine manufacturer replace as necessary
	Oil filter defective	Check
	Coolant deficiency	Check / Clean
Engine does not run on all cylinders	Electrical connections	Check electrical connection to engine ECM
	Fuel injection line leaks	Check / have the engine manufacturer repair as necessary
	Fuel injector defective	Check / have the engine manufacturer replace as necessary
	Air in the fuel system	Check / Replace
	Air inlet	Check for air inlet restriction, clean/ replace filters as necessary
	Fuel filter / fuel pre- cleaner soiled	Check

Fault	Cause	Correct Measure
Engine output is deficient	Engine shut off lever still in stop position	Check
	Oil level too high	Check
	Air cleaner clogged / turbocharger	Check / Replace
	Air cleaner service switch / indicator defective	Check
	CPD defective (connection line leaks)	Have the engine manufacturer check
	Charge airline leaking	Check / have engine manufacturer replace as necessary
	Intercooler soiled	Check / Clean
	Cooling air temperature rise / heating short circuits	Have the engine manufacturer check
	Incorrect valve clearance	Have the engine manufacturer check
	Fuel injection line leaks	Check / have the engine manufacturer repair as necessary
	Fuel injector defective	Check / have the engine manufacturer repair as necessary
	Air in the fuel system	Check / Replace
	Fuel filter / fuel pre- cleaner soiled	Check
	Fuel quality not as per operation manual	Check / Clean
Engine oil pressure is non-existent or very low	Oil level too low	Top up
	Excessive engine wear	Have the engine manufacturer check for excessive crankcase blow by at the engine breather
	Incorrect engine lube	Check / Replace
Engine oil consumption is excessive	Oil level too high	Check
	Excessive engine wear	Have the engine manufacturer check for excessive crankcase blow by at the engine breather
	Turbo charger seal	Check the turbo for oil leaks, have the engine manufacturer repair as necessary
	Oil leaks	Check the engine for oil leaks, have the engine manufacturer repair as necessary

Fault	Cause	Correct Measure
Engine smoke blue	Oil level too high	Check
	Excessive engine wear	Have the engine manufacturer check for excessive crankcase blow by at the engine breather
Engine smoke white	Below starting limit temperature	Check
	Incorrect valve clearance	Have the engine manufacturer check
	Starting aids	Have the engine manufacturer check that cold start system is operating correctly
	Fuel injectors defective	Check / have the engine manufacturer repair as necessary
	Fuel quality not as per operation manual	Check / Clean
Engine smoke black	Air cleaner clogged / turbocharger	Check / Replace
	Air cleaner service switch / indicator defective	Check
	CPD defective (connection line leaks)	Have the engine manufacturer check
	Charge airline leaking	Have the engine manufacturer check / Replace
	Incorrect valve clearance	Have the engine manufacturer check
	Fuel Injector defective	Check / have the engine manufacturer repair as necessary

Fault	Cause	Correct Measure
Alternator charging problem	Alternator drive belts	Check the condition of the drive belts, if worn or damaged replace the belts
		Check the tension of the drive belts, adjust the tension if necessary
	Charging circuit	Check the battery cables, wiring and connections in the charging circuit. Clean and tighten all connections. Replace faulty parts
	Regulator	Have the engine manufacturer verify the regulator is operating correctly, replace if necessary
	Alternator	Have the engine manufacturer verify the alternator is operating correctly, repair or replace if necessary
Coolant in engine oil	Engine oil cooler core	Check for leaks in the oil cooler core, if a leak is found the engine manufacturer replace as necessary. Drain the engine oil and replace with clean oil and oil filter
	Cylinder head gasket	Have the engine manufacturer remove cylinder head and replace head gasket
	Cylinder liner	Have the engine manufacturer with the cylinder head removed check the cylinder liner for cracks, replace as necessary
	Cylinder head	Have the engine manufacturer check for cracks in the cylinder head, if necessary repair or replace the cylinder head
	Cylinder block	Have the engine manufacturer check for cracks in the cylinder block, if necessary repair or replace the cylinder head
ECM will not communicate with other systems or displays	Electrical connections	Check and clean electrical connections

Fault	Cause	Correct Measure
Engine cranks but will not start	Diagnostic code	Check the display for fault code and refer to engine manual for instructions
	ECM module	Check for battery voltage to ECM
	Starting aids	Have the engine manufacturer check that cold start system is operating correctly
	Emergency stop switches	Check that all emergency stops are depressed and functioning correctly
	Starter motor	Have the engine manufacturer remove the starter and visually inspect the drive pinion and flywheel for damage
		Check battery voltage to starter motor and solenoid, test the operation of both , replace as necessary
	Engine speed	Check and clean speed sensor electrical connections
		Have the engine manufacturer check sensor for proper installation
	Fuel injector	Check injector electrical connection and clean as necessary
	Fuel supply	Check the fuel level, do not rely on the fuel gauge only, add fuel as necessary
		Check the fuel lines for restrictions, collapsed and pinched lines, have the engine manufacturer repair and replace as necessary
		Check fuel in the tank for contamination
		Check condition of fuel filters, replace as necessary

Fault	Cause	Correct Measure
Engine oil in cooling system	Engine oil cooler core	Check for leaks in the oil cooler core, if a leak is found have the engine manufacturer replace as necessary. Drain the engine oil and replace with clean oil and oil filter
	Cylinder head gasket	Have the engine manufacturer remove cylinder head and replace head gasket
Intermittent engine shutdown	Emergency stop switches	Check that all emergency stops are depressed and functioning correctly
	Electrical connections	Check and clean electrical connections between the engine ECM system display
	Circuit breakers	Check the status of circuit breakers
	Fuel supply	Check the fuel level, do not rely on the fuel gauge only, add fuel as necessary
		Check the fuel lines for restrictions, collapsed and pinched lines, have the engine manufacturer repair and replace as necessary
		Check fuel in the tank for contamination
		Check condition of fuel filters, replace as necessary
	Diagnostic code	Check the display for fault code and refer to engine manual for instructions

10.10 Engine Fault Codes

If there is an engine fault the engine fault screen will be shown on the display (Figure 10.2) when the alarm button (Item 2) is pressed.

Figure 10.1 - Engine Fault Screen

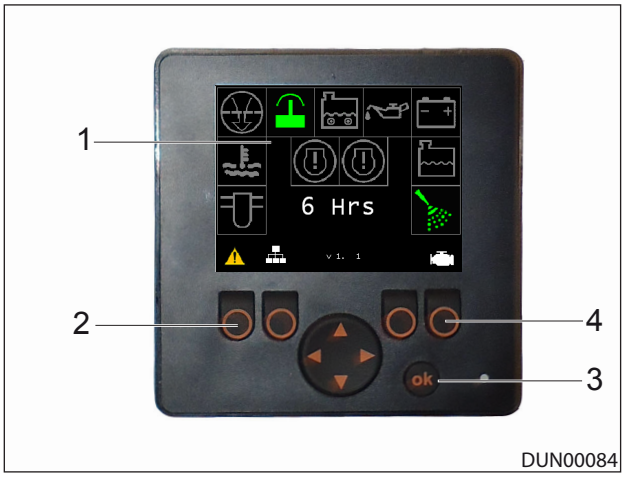

Figure 10.2 - Control Panel Display

The engine fault screen displays the following information:

- The SPN number identifies the specific component which has a fault.
- The number of hours specifies the engine run hours when the fault occurred.
- The FMI number indicates the type of failure that is associated with the component.
- The OC number specifies how many times that particular fault has occurred.

The table gives a list of the fault codes and descriptions of the faults corresponding to the combination of codes from the engine fault screen. The table can be used to determine what the active fault is.

Example:

The table gives a list of the engine fault codes along with a description of the fault.

The J1939 code is made up of two numbers separated by a dash. The first number is the SPN number. The second number is the FMI number.

The engine fault screen is shown on the display screen. The SPN number is 172 and the FMI number is 4. The corresponding numbers in Table 10.1 indicate that the Engine Air Inlet Temperature Sensor Voltage is below normal..

Extract from table:

J1939 Code	Description	Refer to Procedure
172-4	Engine Air Inlet Temperature : Voltage Below Normal	Engine Temperature Sensor Open or Short Circuit - Test (Passive Sensors)

The engine fault screen also shows that this fault has occurred twice and the last time it occurred was when the engine run hours was 6 hours. The yellow warning symbol at the right hand side of the screen indicates that the fault is currently active.

Table 10.1 - Engine Fault Codes and Descriptions

J1939 Code	Description	Refer to Procedure
27-3	Engine Exhaust Gas Recirculation Valve Position Sensor : Voltage Above Normal	Valve Position Sensor - Test
27-4	Engine Exhaust Gas Recirculation Valve Position Sensor : Voltage Below Normal	Valve Position Sensor - Test
29-2	Accelerator Pedal Position 2 : Erratic, Intermittent, or Incorrect (Engines equipped with a throttle switch)	Throttle Switch Circuit - Test
29-2	Accelerator Pedal Position 2 : Erratic, Intermittent or Incorrect (Engines equipped with an analog throttle)	Analog Throttle Position Sensor Circuit - Test
29-3	Accelerator Pedal Position 2 : Voltage Above Normal (Engines equipped with an analog throttle)	Analog Throttle Position Sensor Circuit - Test
29-3	Accelerator Pedal Position 2 : Voltage Above Normal (Engines equipped with a digital throttle)	Digital Throttle Position Sensor Circuit - Test
29-4	Accelerator Pedal Position 2 : Voltage Below Normal (Engines equipped with an analog throttle)	Analog Throttle Position Sensor Circuit - Test
29-4	Accelerator Pedal Position 2 : Voltage Below Normal (Engines equipped with a digital throttle)	Digital Throttle Position Sensor Circuit - Test
29-8	Accelerator Pedal Position 2 : Abnormal Frequency, Pulse Width or Period	Digital Throttle Position Sensor Circuit - Test
51-3	Engine Throttle Position : Voltage Above Normal	Valve Position Sensor - Test
51-4	Engine Throttle Position : Voltage Below Normal	Valve Position Sensor - Test
91-2	Accelerator Pedal Position 1 : Erratic, Intermittent, or Incorrect (Engines equipped with a throttle switch)	Throttle Switch Circuit - Test
91-2	Accelerator Pedal Position 1 : Erratic, Intermittent or Incorrect (Engines equipped with an analog throttle)	Analog Throttle Position Sensor Circuit - Test
91-3	Accelerator Pedal Position 1 : Voltage Above Normal (Engines equipped with an analog throttle)	Analog Throttle Position Sensor Circuit - Test
91-3	Accelerator Pedal Position 1 : Voltage Above Normal (Engines equipped with a digital throttle)	Digital Throttle Position Sensor Circuit - Test
91-4	Accelerator Pedal Position 1 : Voltage Below Normal (Engines equipped with an analog throttle)	Analog Throttle Position Sensor Circuit - Test
91-4	Accelerator Pedal Position 1 : Voltage Below Normal (Engines equipped with a digital throttle)	Digital Throttle Position Sensor Circuit - Test
91-8	Accelerator Pedal Position 1 : Abnormal Frequency, Pulse Width or Period	Digital Throttle Position Sensor Circuit - Test
97-3	Water In Fuel Indicator : Voltage Above Normal	Water in Fuel Sensor - Test
97-15	Water In Fuel Indicator : High - least severe (1)	Fuel Contains Water

J1939 Code	Description	Refer to Procedure
97-16	Water In Fuel Indicator : High - moderate severity (2)	Fuel Contains Water
100-1	Engine Oil Pressure : Low - most severe (3)	Oil Pressure Is Low
100-3	Engine Oil Pressure : Voltage Above Normal	Engine Pressure Sensor Open or Short Circuit - Test
100-4	Engine Oil Pressure : Voltage Below Normal	Engine Pressure Sensor Open or Short Circuit - Test
100-17	Engine Oil Pressure : Low - least severe (1)	Oil Pressure Is Low
100-21	Engine Oil Pressure : Data Drifted Low	5 Volt Sensor Supply Circuit - Test
102-16	Engine Intake Manifold #1 Pressure : High - moderate severity (2)	Intake Manifold Air Pressure Is High
102-18	Engine Intake Manifold #1 Pressure : Low - moderate severity (2)	Intake Manifold Air Pressure Is Low
105-3	Engine Intake Manifold #1 Temperature : Voltage Above Normal	Engine Temperature Sensor Open or Short Circuit - Test (Passive Sensors)
105-4	Engine Intake Manifold #1 Temperature : Voltage Below Normal	Engine Temperature Sensor Open or Short Circuit - Test (Passive Sensors)
105-15	Engine Intake Manifold #1 Temperature : High - least severe (1)	Intake Manifold Air Temperature Is High
105-16	Engine Intake Manifold #1 Temperature : High - moderate severity (2)	Intake Manifold Air Temperature Is High
107-15	Engine Air Filter 1 Differential Pressure : High - least severe (1)	Inlet Air Is Restricted
108-3	Barometric Pressure : Voltage Above Normal	Engine Pressure Sensor Open or Short Circuit - Test
108-4	Barometric Pressure : Voltage Below Normal	Engine Pressure Sensor Open or Short Circuit - Test
108-13	Barometric Pressure : Calibration Required	Sensor Calibration Required - Test
108-21	Barometric Pressure : Data Drifted Low	5 Volt Sensor Supply Circuit - Test
110-0	Engine Coolant Temperature : High - most severe (3)	Coolant Temperature Is High
110-3	Engine Coolant Temperature : Voltage Above Normal	Engine Temperature Sensor Open or Short Circuit - Test (Passive Sensors)
110-4	Engine Coolant Temperature : Voltage Below Normal	Engine Temperature Sensor Open or Short Circuit - Test (Passive Sensors)
110-15	Engine Coolant Temperature : High - least severe (1)	Coolant Temperature Is High

J1939 Code	Description	Refer to Procedure
110-16	Engine Coolant Temperature : High - moderate severity (2)	Coolant Temperature Is High
111-1	Engine Coolant Level : Low - most severe (3)	Coolant Level is Low
157-3	Engine Injector Metering Rail #1 Pressure : Voltage Above Normal	Engine Pressure Sensor Open or Short Circuit - Test
157-4	Engine Injector Metering Rail #1 Pressure : Voltage Below Normal	Engine Pressure Sensor Open or Short Circuit - Test
157-16	Engine Injector Metering Rail #1 Pressure : High - moderate severity (2)	Fuel Rail Pressure Problem
157-18	Engine Injector Metering Rail #1 Pressure : Low - moderate severity (2)	Fuel Rail Pressure Problem
158-2	Keyswitch Battery Potential : Erratic, Intermittent or Incorrect	Ignition Keyswitch Circuit and Battery Supply Circuit - Test
168-2	Battery Potential / Power Input 1 : Erratic, Intermittent or Incorrect	Ignition Keyswitch Circuit and Battery Supply Circuit - Test
168-3	Battery Potential / Power Input 1 : Voltage Above Normal	Ignition Keyswitch Circuit and Battery Supply Circuit - Test
168-4	Battery Potential / Power Input 1 : Voltage Below Normal	Ignition Keyswitch Circuit and Battery Supply Circuit - Test
172-3	Engine Air Inlet Temperature : Voltage Above Normal	Engine Temperature Sensor Open or Short Circuit - Test (Passive Sensors)
172-4	Engine Air Inlet Temperature : Voltage Below Normal	Engine Temperature Sensor Open or Short Circuit - Test (Passive Sensors)
174-3	Engine Fuel Temperature 1 : Voltage Above Normal	Engine Temperature Sensor Open or Short Circuit - Test (Passive Sensors)
174-4	Engine Fuel Temperature 1 : Voltage Below Normal	Engine Temperature Sensor Open or Short Circuit - Test (Passive Sensors)
174-15	Engine Fuel Temperature 1 : High - least severe (1)	Fuel Temperature Is High
174-16	Engine Fuel Temperature 1 : High - moderate severity (2)	Fuel Temperature Is High
190-8	Engine Speed : Abnormal Frequency, Pulse Width or Period	Engine Speed/Timing Sensor Circuit - Test
190-15	Engine Speed : High - least severe (1)	Engine Overspeeds
411-3	Engine Exhaust Gas Recirculation Differential Pressure Sensor : Voltage Above Normal	Engine Pressure Sensor Open or Short Circuit - Test
411-4	Engine Exhaust Gas Recirculation Differential Pressure Sensor : Voltage Below Normal	Engine Pressure Sensor Open or Short Circuit - Test
411-13	Engine Exhaust Gas Recirculation Differential Pressure Sensor : Calibration Required	Sensor Calibration Required - Test

J1939 Code	Description	Refer to Procedure
412-3	Engine Exhaust Gas Recirculation Temperature: Voltage Above Normal	Engine Temperature Sensor Open or Short Circuit - Test (Passive Sensors)
412-4	Engine Exhaust Gas Recirculation Temperature: Voltage Below Normal	Engine Temperature Sensor Open or Short Circuit - Test (Passive Sensors)
412-15	Engine Exhaust Gas Recirculation Temperature : High - least severe (1)	NRS Exhaust Gas Temperature Is High
412-16	Engine Exhaust Gas Recirculation Temperature : High - moderate severity (2)	NRS Exhaust Gas Temperature Is High
558-2	Accelerator Pedal 1 Low Idle Switch : Erratic, Intermittent or Incorrect	Idle Validation Switch Circuit - Test
626-5	Engine Start Enable Device 1 : Current Below Normal	Ether Starting Aid - Test
626-6	Engine Start Enable Device 1 : Current Above Normal	Ether Starting Aid - Test
630-2	Calibration Memory : Erratic, Intermittent or Incorrect	Flash Programming
631-2	Calibration Module : Erratic, Intermittent or Incorrect	ECM Memory - Test
637-11	Engine Timing Sensor : Other Failure Mode	Engine Speed/Timing Sensor Circuit - Test
651-2	Engine Injector Cylinder #01 : Data Incorrect	Injector Data Incorrect- Test
651-5	Engine Injector Cylinder #01 : Current Below Normal	Injector Solenoid Circuit - Test
651-6	Engine Injector Cylinder #01 : Current Above Normal	Injector Solenoid Circuit - Test
652-2	Engine Injector Cylinder #02 : Data Incorrect	Injector Data Incorrect- Test
652-5	Engine Injector Cylinder #02 : Current Below Normal	Injector Solenoid Circuit - Test
652-6	Engine Injector Cylinder #02 : Current Above Normal	Injector Solenoid Circuit - Test
653-2	Engine Injector Cylinder #03 : Data Incorrect	Injector Data Incorrect- Test
653-5	Engine Injector Cylinder #03 : Current Below Normal	Injector Solenoid Circuit - Test
653-6	Engine Injector Cylinder #03 : Current Above Normal	Injector Solenoid Circuit - Test
654-2	Engine Injector Cylinder #04 : Data Incorrect	Injector Data Incorrect- Test
654-5	Engine Injector Cylinder #04 : Current Below Normal	Injector Solenoid Circuit - Test
654-6	Engine Injector Cylinder #04 : Current Above Normal	Injector Solenoid Circuit - Test
655-2	Engine Injector Cylinder #05 : Data Incorrect	Injector Data Incorrect- Test
655-5	Engine Injector Cylinder #05 : Current Below Normal	Injector Solenoid Circuit - Test

J1939 Code	Description	Refer to Procedure
655-6	Engine Injector Cylinder #05 : Current Above Normal	Injector Solenoid Circuit - Test
656-2	Engine Injector Cylinder #06 : Data Incorrect	Injector Data Incorrect- Test
656-5	Engine Injector Cylinder #06 : Current Below Normal	Injector Solenoid Circuit - Test
656-6	Engine Injector Cylinder #06 : Current Above Normal	Injector Solenoid Circuit - Test
676-6	Engine Glow Plug Relay : Current Above Normal	Starting Aid (Glow Plug) Relay Circuit - Test
678-3	ECU 8 Volts DC Supply : Voltage Above Normal	Digital Throttle Position Sensor Circuit - Test
678-4	ECU 8 Volts DC Supply : Voltage Below Normal	Digital Throttle Position Sensor Circuit - Test
723-8	Engine Speed Sensor #2 : Abnormal Frequency, Pulse Width or Period	Engine Speed/Timing Sensor Circuit - Test
1075-5	Engine Electric Lift Pump for Engine Fuel Supply : Current Below Normal	Fuel Pump Relay Circuit - Test
1075-6	Engine Electric Lift Pump for Engine Fuel Supply : Current Above Normal	Fuel Pump Relay Circuit - Test
1076-5	Engine Fuel Injection Pump Fuel Control Valve : Current Below Normal	Solenoid Valve - Test
1076-6	Engine Fuel Injection Pump Fuel Control Valve : Current Above Normal	Solenoid Valve - Test
1188-5	Engine Turbocharger 1 Wastegate Drive : Current Below Normal	Solenoid Valve - Test
1188-6	Engine Turbocharger 1 Wastegate Drive : Current Above Normal	Solenoid Valve - Test
1196-9	Anti-theft Component Status States : Abnormal Update Rate	Data Link Circuit - Test
1239-0	Engine Fuel Leakage 1: High - most severe (3)	Fuel Rail Pressure Problem
2659-7	Engine Exhaust Gas Recirculation (EGR) Mass Flow Rate : Not Responding	NRS Mass Flow Rate Problem
2791-5	Engine Exhaust Gas Recirculation (EGR) Valve Control : Current Below Normal	Motorized Valve - Test
2791-6	Engine Exhaust Gas Recirculation (EGR) Valve Control : Current Above Normal	Motorized Valve - Test
2791-7	Engine Exhaust Gas Recirculation (EGR) Valve Control : Not Responding Properly	Motorized Valve - Test
2882-2	Engine Alternate Rating Select : Erratic, Intermittent, or Incorrect	Mode Selection Circuit - Test
2970-2	Accelerator Pedal 2 Low Idle Switch : Erratic, Intermittent, or Incorrect	Idle Validation Switch Circuit - Test
3241-3	Exhaust Gas Temperature 1 : Voltage Above Normal	Engine Temperature Sensor Open or Short Circuit - Test (Active Sensors)

J1939 Code	Description	Refer to Procedure
3241-4	Exhaust Gas Temperature 1 : Voltage Below Normal	Engine Temperature Sensor Open or Short Circuit - Test (Active Sensors)
3242-3	Particulate Trap Intake Gas Temperature : Voltage Above Normal	Engine Temperature Sensor Open or Short Circuit - Test (Active Sensors)
3242-4	Particulate Trap Intake Gas Temperature : Voltage Below Normal	Engine Temperature Sensor Open or Short Circuit - Test (Active Sensors)
3242-15	Particulate Trap Intake Gas Temperature : High - least severe (1)	Diesel Particulate Filter Temperature Is High
3242-16	Particulate Trap Intake Gas Temperature : High - moderate severity (2)	Diesel Particulate Filter Temperature Is High
3242-18	Particulate Trap Intake Gas Temperature : Low - moderate severity (2)	Diesel Particulate Filter Temperature Is Low
3251-3	Particulate Trap Differential Pressure : Voltage Above Normal	Engine Pressure Sensor Open or Short Circuit - Test
3251-4	Particulate Trap Differential Pressure : Voltage Below Normal	Engine Pressure Sensor Open or Short Circuit - Test
3251-13	Particulate Trap Differential Pressure : Calibration Required	Sensor Calibration Required - Test
3358-3	Engine Exhaust Gas Recirculation Inlet Pressure: Voltage Above Normal	Engine Pressure Sensor Open or Short Circuit - Test
3358-4	Engine Exhaust Gas Recirculation Inlet Pressure: Voltage Below Normal	Engine Pressure Sensor Open or Short Circuit - Test
3358-13	Engine Exhaust Gas Recirculation Inlet Pressure : Calibration Required	Sensor Calibration Required - Test
3358-21	Engine Exhaust Gas Recirculation Inlet Pressure : Data Drifted Low	5 Volt Sensor Supply Circuit - Test
3464-5	Engine Throttle Actuator 1 Control Command : Current Below Normal	Motorized Valve - Test
3464-6	Engine Throttle Actuator 1 Control Command : Current Above Normal	Motorized Valve - Test
3464-7	Engine Throttle Actuator 1 Control Command : Not Responding Properly	Motorized Valve - Test
3473-31	Aftertreatment #1 Failed to Ignite	Diesel Particulate Filter Collects Excessive Soot or ARD Failed to Ignite
3474-14	Aftertreatment #1 Loss of Combustion : Special Instruction	ARD Loss of Combustion
3474-31	Aftertreatment #1 Loss of Combustion	Diesel Particulate Filter Collects Excessive Soot or ARD Loss of Combustion
3479-5	Aftertreatment #1 Fuel Pressure Control : Current Below Normal	Solenoid Valve - Test

J1939 Code	Description	Refer to Procedure
3479-6	Aftertreatment #1 Fuel Pressure Control : Current Above Normal	Solenoid Valve - Test
3480-3	Aftertreatment #1 Fuel Pressure #1 : Voltage Above Normal	Engine Pressure Sensor Open or Short Circuit - Test
3480-4	Aftertreatment #1 Fuel Pressure #1 : Voltage Below Normal	Engine Pressure Sensor Open or Short Circuit - Test
3480-15	Aftertreatment #1 Fuel Pressure #1 : High - least severe (1)	ARD Pilot Fuel Pressure Is High
3480-16	Aftertreatment #1 Fuel Pressure #1 : High - moderate severity (2)	ARD Pilot Fuel Pressure Is High
3480-17	Aftertreatment #1 Fuel Pressure #1 : Low - least severe (1)	ARD Pilot Fuel Pressure Is Low
3480-18	Aftertreatment #1 Fuel Pressure #1 : Low - moderate severity (2)	ARD Pilot Fuel Pressure Is Low
3483-11	Aftertreatment #1 Regeneration Status : Other Failure Mode	Diesel Particulate Filter Requires Initial Regeneration
3484-5	Aftertreatment #1 Ignition : Current Below Normal	ARD Ignition - Test
3484-6	Aftertreatment #1 Ignition : Current Above Normal	ARD Ignition - Test
3487-5	Aftertreatment #1 Air Pressure Control : Current Below Normal	Motorized Valve - Test
3487-6	Aftertreatment #1 Air Pressure Control : Current Above Normal	Motorized Valve - Test
3487-7	Aftertreatment #1 Air Pressure Control : Not Responding Properly	Motorized Valve - Test
3488-3	Aftertreatment #1 Air Pressure Actuator Position : Voltage Above Normal	Valve Position Sensor - Test
3488-4	Aftertreatment #1 Air Pressure Actuator Position : Voltage Below Normal	Valve Position Sensor - Test
3509-3	Sensor Supply Voltage 1 : Voltage Above Normal	5 Volt Sensor Supply Circuit - Test
3509-4	Sensor Supply Voltage 1 : Voltage Below Normal	5 Volt Sensor Supply Circuit - Test
3510-3	Sensor Supply Voltage 2 : Voltage Above Normal	5 Volt Sensor Supply Circuit - Test
3510-4	Sensor Supply Voltage 2 : Voltage Below Normal	5 Volt Sensor Supply Circuit - Test
3556-7	Aftertreatment Fuel Injector #1 : Not Responding Properly	ARD Nozzle - Test
3563-3	Engine Intake Manifold #1 Absolute Pressure : Voltage Above Normal	Engine Pressure Sensor Open or Short
3563-4	Engine Intake Manifold #1 Absolute Pressure : Voltage Below Normal	Engine Pressure Sensor Open or Short

J1939 Code	Description	Refer to Procedure
3563-13	Engine Intake Manifold #1 Absolute Pressure : Calibration Required	Sensor Calibration Required - Test
3563-21	Engine Intake Manifold #1 Absolute Pressure : Data Drifted Low	5 Volt Sensor Supply Circuit - Test
3609-3	Diesel Particulate Filter Intake Pressure 1 : Voltage Above Normal	Engine Pressure Sensor Open or Short
3609-4	Diesel Particulate Filter Intake Pressure 1 : Voltage Below Normal	Engine Pressure Sensor Open or Short Circuit - Test
3609-13	Diesel Particulate Filter Intake Pressure 1 : Calibration Required	Sensor Calibration Required - Test
3609-15	Diesel Particulate Filter Intake Pressure 1 : High Least Severe	Diesel Particulate Filter Has High Inlet Pressure
3609-17	Diesel Particulate Filter Intake Pressure 1 : Low Moderate Severity	Diesel Particulate Filter Has Low Inlet Pressure
3609-21	Diesel Particulate Filter Intake Pressure 1 : Data Drifted Low	5 Volt Sensor Supply Circuit - Test
3703-31	Particulate Trap Active Regeneration Inhibited Due to Inhibit Switch	Diesel Particulate Filter Collects Excessive Soot or ARD Is Disabled
3711-31	Particulate Trap Active Regeneration Inhibited Due to Low Exhaust Gas Temperature	Diesel Particulate Filter Collects Excessive Soot or ARD Temperature Is Low
3714-31	Particulate Trap Active Regeneration Inhibited Due to Temporary System Lockout	Diesel Particulate Filter Collects Excessive Soot
3715-31	Particulate Trap Active Regeneration Inhibited Due to Permanent System Lockout	Diesel Particulate Filter Collects Excessive Soot
3719-0	Particulate Trap #1 Soot Load Percent : High - most severe (3)	Diesel Particulate Filter Collects Excessive Soot
3719-16	Particulate Trap #1 Soot Load Percent : High - moderate severity (2)	Diesel Particulate Filter Collects Excessive Soot
3720-15	Particulate Trap #1 Ash Load Percent : High - least severe (1)	Diesel Particulate Filter Has High Ash Load
3720-16	Particulate Trap #1 Ash Load Percent : High - moderate severity (2)	Diesel Particulate Filter Has High Ash Load
3750-31	Diesel Particulate Filter 1 Conditions Not Met for Active Regeneration	Diesel Particulate Filter Collects Excessive Soot or ARD Is Disabled
3837-3	Aftertreatment 1 Secondary Air Pressure : Voltage Above Normal	Engine Pressure Sensor Open or Short Circuit - Test
3837-4	Aftertreatment 1 Secondary Air Pressure : Voltage Below Normal	Engine Pressure Sensor Open or Short Circuit - Test
3837-13	Aftertreatment 1 Secondary Air Pressure : Calibration Required	Sensor Calibration Required - Test
3837-17	Aftertreatment 1 Secondary Air Pressure : Low - least severe	ARD Combustion Supply Air Pressure Is Low

J1939 Code	Description	Refer to Procedure
3837-21	Aftertreatment 1 Secondary Air Pressure : Data Drifted Low	5 Volt Sensor Supply Circuit - Test
4265-5	Aftertreatment #1 Transformer Secondary Output : Current Below Normal	ARD Ignition - Test
4265-6	Aftertreatment #1 Transformer Secondary Output : Current Above Normal	ARD Ignition - Test
4301-5	Aftertreatment #1 Fuel Injector #1 Heater Control : Current Below Normal	ARD Nozzle Heater - Test
4301-6	Aftertreatment #1 Fuel Injector #1 Heater Control : Current Above Normal	ARD Nozzle Heater - Test
4783-2	DPF #1 Mean Soot Signal : Erratic, Intermittent, or Incorrect	Soot Sensor - Test
4783-3	DPF #1 Mean Soot Signal : Voltage Above Normal	Soot Sensor - Test
4783-4	DPF #1 Mean Soot Signal : Voltage Below Normal	Soot Sensor - Test
4783-9	DPF #1 Mean Soot Signal : Abnormal Update Rate	Soot Sensor - Test
4783-12	DPF #1 Mean Soot Signal : Failure	Soot Sensor - Test
4783-13	DPF #1 Mean Soot Signal : Out of Calibration	Soot Sensor - Test
4783-21	DPF #1 Mean Soot Signal : Data Drifted Low	Soot Sensor - Test
5423-5	Aftertreatment Regeneration Device Fuel Pump Relay : Current Below Normal	ARD Fuel Supply - Test
5423-6	Aftertreatment Regeneration Device Fuel Pump Relay : Current Above Normal	ARD Fuel Supply - Test
5571-0	High Pressure Common Rail Fuel Pressure Relief Valve : High - most severe (3)	Fuel Rail Pressure Problem
5576-2	Aftertreatment #1 Identification Number Module : Erratic, Intermittent, or Incorrect	Diesel Particulate Filter Identification Signal - Test
5576-8	Aftertreatment #1 Identification Number Module : Abnormal Frequency, Pulse Width, or Period	Diesel Particulate Filter Identification Signal - Test
5576-14	Aftertreatment #1 Identification Number Module : Special Instruction	Diesel Particulate Filter Identification Signal - Test

10.11 Machine Fault Codes and Descriptions

NOTICE

The fault codes may alert the operator to conditions that may damage the machines components. Never ignore a Machine fault if one occurs. Always investigate thoroughly or if in doubt contact your Terex plant supplier.

Table 10.2 - Machine Fault Codes

Fault	Description	Graphic
1	Emergency Stop Activated Emergency Stop on the machine has been activated at ?? Hrs Run Machine will Shutdown	
2	Machine Stop Activated Machine Stop on the doglead has been activated at ?? Hrs Run Machine will Shutdown	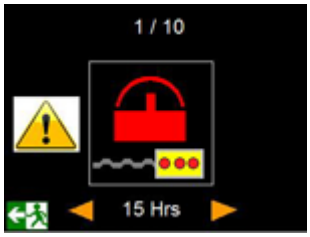
3	Coolant Level Low - SPN 111 Coolant Level is low, activated at ?? Hrs Run. Machine will Shutdown	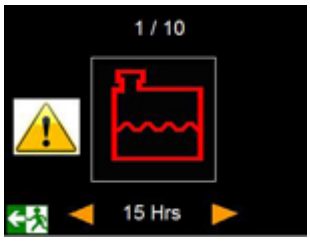
4	Engine Temperature - SPN 110 Engine temperature is above normal, activated at ?? Hrs Run. Warning only	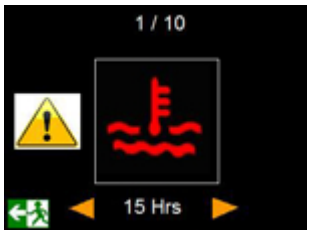
5	Air Filter Restriction - SPN 107 Air Filter for Engine has become blocked activated at ?? Hrs Run. Machine will show this Alarm for 30 Minutes after which the machine will Shutdown	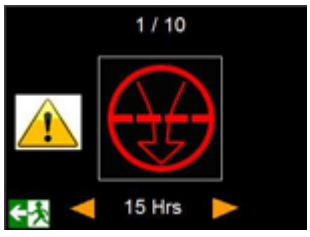

Fault	Description	Graphic
6	Fuel Contamination - SPN 97 The water trap is full, activated at ?? Hrs Run. Machine will Shutdown	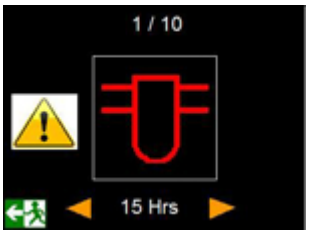
7	Hydraulic Oil Level Low Hydraulic Oil Level is low, activated at ?? Hrs Run. Machine will Shutdown	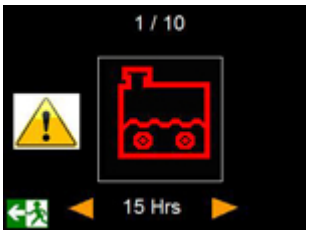
8	Oil Pressure - SPN 100 Engine oil pressure low, recorded at ?? Hrs Run. Engine will not start	
9	After treatment Fault - SPN 5246 & 3038 The After treatment is not functioning, recorded at ?? Hrs Run. The engine will de-rate This warning will also appear on the Home screen when present	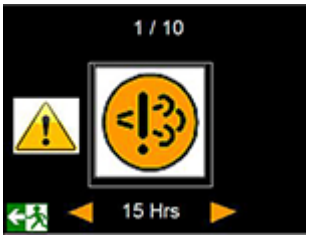
10	Battery Voltage Battery voltage has fallen below the required level, Alarm recorded at ?? Hrs Run. Also an indication that the engines alternator has stopped charging.	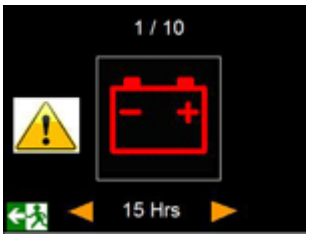
11	Comms Fault MCU Controller has lost CAN Communication with the MCU Display Screen, Alarm recorded at ?? Hrs Run. Engine will not start	

Fault	Description	Graphic
12	DPF Warning - SPN 3719-16 DPF soot level has reached 100%, activated at ?? Hrs Run. Engine regen is required	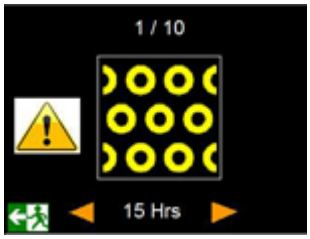
13	DPF Critical Warning - SPN 3719-31 DPF soot level has reached 116%, activated at ?? Hrs Run. Engine regen is required, engine will shut down after 30 seconds	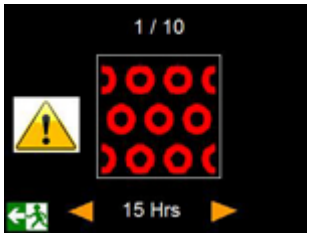
14	Emissions System Malfunction - SPN 3038 The engine will de-rate. If the engine is run in this mode the engine will go into harbour mode.	

Intentionally Left Blank

Table of Content

11 Storage 11-2

11 Storage

On receipt of the machine and the separate lubrication and hydraulic equipment carry out a careful inspection and immediately report any component damage or loss. Conduct a careful visual check of the machine and check all the separate loose items against the equipment delivery note.

The equipment should be stored in a dry, well-ventilated area free of excessive dust. All openings should be sealed to prevent the ingress of dirt or moisture.

If the machinery cannot be stored indoors it must be sheeted over and made thoroughly weatherproof to avoid deterioration.

Contact Terex for advice on any situation wherever storage or inactivity is in excess of that reasonably to be expected or where a possibly hostile environment exists, as the defects liability warranty may be affected.

12 Glossary of Terms

Anti Rock Stay

A strap which is used to stabilise the screen unit whilst in transport.

Antiloosen Fastener

A type of fastener used to secure some doors.

Assemblies

Individual sections of the platform made up of different components parts.

Auxiliary Control Valve

A bank of hydraulic valves which carry out various movement functions throughout the platform.

Belt Scraper

A device fixed or flexible mounted across the width of a belt of a conveyor for removing adherent material.

Bogie

Undercarriage on chassis to which axles are bolted.

Centre Roller

A roller, which supports the loaded belt.

Transfer Conveyor

A conveyor used to transfer the fines material from underneath the drum onto the incline conveyor.

Control Panel

A panel that is situated in the power unit which is used to start the engine and view the various warning lights.

Controller

An electromechanical device or assembly of devices for starting, stopping, accelerating, or decelerating a drive, or serving, to govern in some predetermined manner the power delivered to the drive.

Conveyor

A horizontal, inclined, or vertical device for moving or transporting bulk material, packages, or objects, in a path determined by the design of the device, and having points of adding and discharge, fixed or selective.

Conveyor belt

A belt used to carry materials and transmit the power required to move the load being conveyed.

Conveyor, extendable

A conveyor that may be lengthened or shortened to suit operating needs.

Conveyor, live roller

A series of rollers over which objects are moved by the application of power to all or some of the rollers. The power transmitting medium is usually belting or chain.

Conveyor, mobile

Conveyor supported on a mobile self propelled structure. These conveyors normally handle bulk material.

Conveyor, portable

A transportable conveyor which is not self propelled, usually having supports that provide mobility.

Conveyor, screw

A conveyor screw revolving in a suitably shaped stationary trough or casing fitted hangers, trough ends, and other auxiliary accessories.

Control Valve

A hydraulic valve, which carries out a movement function on the machine.

Depressurised

To release the pressure from a vessel i.e. a tire, hydraulic system.

Discharge Area

The area where material is dumped from the machine.

Dolly Axle

An axle that can be fitted to king pin, used for towing purpose.

Drive

An assembly of the necessary structural, mechanical, and electrical parts provide the motive power to change direction.

Drive Drum

The drum that drives the conveyor belt sometimes called the head drum.

Non Drive Drum

The drum that is non-driven in the conveyor belt sometimes called the tail drum.

Drum Lagging

Rubber glued around the drive drum to grip the conveyor belt.

Feed Conveyor

Conveyor used to move the material from the hopper to the main conveyor.

Feedboot

An extended metal surround located at the bottom of the main, tail & side conveyors.

Feeder Unit

Conveyor which feeds the material onto the incline conveyor at an even rate.

Filler Cap

A cap used to seal a tank and is removed in order to fill the tank.

Fines Material

Material that is screened through the lower screen deck and is discharged on to the tail conveyor.

Four Bank

A bank of hydraulic control valves used to control functions of the machine.

Flywheel

A half moon shaped counter weight, which is mounted on the screen unit shaft for the purpose of counter acting the weight of the eccentric of the screen shaft.

Gate

A device or structure by means of which the flow of material may be stopped or regulated; also a section of a machine equipped with a hinge mechanism for movable service often called a hinge section.

Grid Aperture

The spacing between the grid bars (typically 100mm) which determines the material size that enters the feed hopper.

Grid Bar

Bars used on the grid spaced out with equal spacing. Used to roughly screen material.

Grating

A coarse screen made of parallel and crossed bars used to prevent passage of oversized material.

Guard

A covering, barricade, grating, fence, or other form of barrier used to prevent inadvertent physical contact with operating components such as gears, sprockets, chains, and belts.

Hopper

A box having a funnel shaped bottom, or a bottom reduced in size, narrowed, or necked to receive material and direct it to a conveyor, feeder, or chute.

Hydraulic Components

A part used in the hydraulic system of the machine i.e. valve, motor etc.

Hydraulic Screen Tension

The assistance of hydraulic rams when tensioning the screen meshes.

Jacking legs

Hydraulic adjustable legs which raise or lower the back of the machine for the purpose of coupling to the tractor unit.

King Pin

Coupling used for towing by the tractor unit.

Landing Leg

A support leg which lowers from the machine and is used to stabilise it whilst in the working position.

LHS

Left Hand Side, used with reference to the side conveyors.

Lockout

Procedure to be carried out to ensure the machine is safe for maintenance or repairs.

Machine Stop

A stop arising from a sudden and unexpected need, and not as a part of the normal operation.

Main Conveyor

Conveyor used to move the material from the hopper to the screen unit.

Nip Point

A point at which a machine element moving in line meets a rotating element in such a manner that it is possible to nip, pinch, squeeze, or entrap a person or objects coming into contact with one or two of the members.

Optimum Speed

The best or most favorable speed to run a conveyor for example.

Oversize material

Material that is larger than the mesh size and runs off the top screen deck.

Platform

A working space for persons, elevated above the surrounding floor or ground for the operation of machinery and equipment.

Power unit

An inclosed unit situated under the main conveyor which houses the component parts which together drive the machine.

Prevent

When used in a context such as prevent access or prevent physical contact, means to impede or block; when used in a context such as prevent injury, means to reduce the chances of, but does not imply that an injury cannot occur.

P.S.I

Pounds per square inch. Unit of Pressure. Conversion 1 Bar = 14.5 P.S.I

Rated speed

The speed, as established by the manufacture or a qualified person, at which safe and satisfactory service can be expected.

Recommissioning

To prepare the machine for use.

Reject Grid

An arrangement of equally spaced grid bars which is used to separate the large stones before the material enters the feed hopper.

Remote control

Any system of controls in which the actuator is situated in a remote location.

Retract

Withdraw or fold up conveyor.

Return Roller

A roller, which is used to support the unladened belt on the underside of the conveyor.

RHS

Right Hand Side, used with reference to the side conveyors.

Safety device

A mechanism or an arrangement placed in use for the specific purposes of preventing an unsafe condition, preventing the continuation of an unsafe condition, warning of an unsafe condition, or limiting or eliminating the unsafe effects of a possible condition.

Scraper

A device fixed or flexibly mounted across the width of a belt of a conveyor for removing adherent material.

Screen Drum

Drum which mesh is fitted onto rotates during operation to screen material (Trommel).

Screen Unit

Vibratory unit used to separate by size raw materials.

Should

As used in the context of a provision of this manual, indicates a recommendation, the advisability of which depends on the facts in a particular situation.

Shredder Safety Stay

Metal strap which restrains the shredder unit whilst in the raised position.

Shredder Unit

Swinging flail type unit which is located at the discharge end of the feed conveyor and is used to break down material.

Side Conveyor

Conveyor used to collect the material from the screen unit and move it to the discharge area at 90 degrees to the main machine.

Side Roller

Roller used to create arc on the belt to reduce spillage.

Sound Baffles

Plates used to blank out noise from the power unit.

Spillage

Material that spills over the edge of a conveyor etc.

Spill guard

A stationary device of sufficient strength and capacity to catch, retain, and contain any reasonably foreseeable spillage from a conveyor passing overhead.

Spreader Plate

Swinging plate located at the discharge end of the main conveyor and is used to spread the material evenly on the screen unit.

Sprocket

A toothed wheel arranged to fit into the links of a chain.

Strut

Rigid support used to hold an assembly in place.

Swivel Conveyor

Conveyor used to discharge fines material. Swivel through 180° to increase stockpiling capacity.

Tail Conveyor

Conveyor used to collect the fines material from the screen unit and move it to the discharge area.

Take-up

The assembly of the necessary structural and mechanical parts that provides the means to adjust the length of belts, cables, chains, etc. to compensate for stretch, shrinkage, and wear.

Telescopic Head Section

A section of a conveyor which extends out telescopically into transport position.

Tow pin

A movable or fixed member, used to engage a push or pull.

Tracks

The beams, shapes, or formed section on which trolleys, rollers, shoes, or wheels roll or slide while propelled.

Transport Bracket

A bracket used to hold an assembly in place whilst in transport.

Transport Position

The position of the machine when conveyors are folded.

Variable Speed Flow Control

A device which is used to hydraulically vary the speed of the conveyor belt.

Viewing Apertures

Opening holes to view the conveyor belt.

Vulcanized Belt

A conveyor belt that has been joined seamlessly using a special treatment.

Wheel Nut Torque

A measure of pressure applied to tighten a nut.

Table of Content

Appendix

Appendix A EC Declaration of Conformity
Appendix B Warranty
Appendix C Schematics

Intentionally Left Blank

Appendix A EC Declaration of Conformity

This machine is in conformity with the provisions of the EC Machinery Directive 06/42/EC together with appropriate EN Harmonised Standards and National BS Standards and Specifications.

A Declaration of Conformity certificate is applicable to each machine. The original copy of the certificate is sent out with the machine.

The following page shows an example of a Declaration of Conformity certificate and the information which should be included in it.

Each item of information on the example is numbered and the list of explanations below refer to the corresponding numbered items on the example.

1 Full name and address of the manufacturer of the machine.

2 The name of the person authorised to compile the technical file.

3 The address of the person authorised to compile the technical file.

4 The function of the machine.

5 The model or type of the machine.

6 Serial number or pin number of the machine.

7 Commercial name of the machine.

8 Manufacturers declaration of conformity to the Machinery Directive 2006/42/EC.

9 Manufacturers declaration of conformity to the EMC Directive 2004/108/EC.

10 The place where the machine was issued from.

11 The date on which the machine was issued.

12 Identification of the person empowered to sign on behalf of the manufacturer.

Example

TEREX CORPORATION

Original EC Declaration of Conformity

2006/42/EC 'Machinery Directive'

Manufacturer: Terex GB Limited (1)
200 Coalisland Road
Dungannon
BT71 4DR
United Kingdom

Name of person authorised to compile the Technical File: Michael O'Neill (2)
Address of person authorised to compile the Technical file: Terex GB Ltd (address as above) (3)

Machine Function: Mobile Screener (4)

Model / Type: (5)

Serial / PIN number: (6)

Commercial Name: (7)

Terex GB Limited hereby declare that the above piece of industrial equipment has been designed and manufactured to comply with the relevant provisions of the Machinery Directive 2006/42/EC. (8)

Terex GB Limited hereby declare that the above of industrial equipment has been designed and manufactured to comply with the EMC Directive 2004/108/EC. (9)

Place of issue: Dungannon, United Kingdom. (10)
Date of issue: AUGUST 2011 (11)

Empowered signatory: (12)

EXAMPLE

Appendix B Warranty

The following pages show warranty information.

NON USA SALES ONLY

LIMITED PRODUCT WARRANTY (NON USA)

Terex GB Ltd. (hereafter referred as "Seller") warrants its new Equipment, to be free of defects in material or workmanship for a period of (i) 12 months from the date the Equipment is first placed into service, whether such Equipment is sold, rented or leased or (ii) 2,000 hours of use, whichever first occurs, provided that in no event shall this warranty extend beyond a period of 24 months from the date of shipment from the factory; provided that (1) the Buyer or the end-user sends Seller written notice of the defect within sixty (60) days of its discovery and establishes to the Seller's satisfaction that: (i) the Equipment has been maintained and operated within the limits of rated and normal usage, and that there have been no alterations to it; and (ii) the defect did not result in any manner from the intentional or negligent action or inaction by Buyer or the end-user or any of their respective agents or employees or any person using it and (2) a new machine registration certificate or the commissioning documents have been completed, signed and delivered to Seller within thirty (30) days of the equipment's "in-service" date. If requested by Seller, Buyer must return the defective equipment to Seller's manufacturing facility, or other location designated by Seller, for inspection, and if Buyer cannot establish that conditions (1) (i) and (1) (ii) above have been met, then this warranty shall not cover the alleged defect.

Subject to the Buyer establishing that conditions (1)(i) and 1(ii) above have been met, Seller warrants all Critical Components (as defined herein) to be free, under normal use and service, of any defects in manufacture or materials for a period of: (1) twenty four (24) months from the date of commissioning, (2) 4000 hours of use, or (3) Thirty Six (36) months the date of shipment from the factory, whichever occurs first. For the purposes of this warranty, Critical Components shall mean:

- Cone machines :- Main frame, Upper frame Countershaft and Housing, Drive pulley Drive Pinion and Gear, Eccentric, Wedge Ring (Excluding Pads)
- Jaw Machines: - Mainframe including Cross Beam, Eccentric Shaft, Jaw Stock, Toggle Beam, Flywheels.
- Impactor Machines: - Rotor, Main shaft, Crusher Body and Drive Pulley.
- Screen Boxes; - Screen Box Welded Assembly, Screen Box Sub frame, Main Shaft.

Seller's obligation and liability under this warranty is expressly limited to, at Seller's sole option, repairing or replacing, with new or remanufactured parts or components, any part, which appears to Seller upon inspection to have been defective in material or workmanship. Such parts shall be provided at no cost to the owner. If requested by Seller, components or parts for which a warranty claim is made shall be returned to Seller at a location designated by Seller. All components and parts replaced under this limited product warranty become the property of Seller.

This warranty shall be null and void if parts (including wear parts) other than genuine OEM Seller parts are used in the equipment.

Accessories, assemblies and components included in the Seller equipment, which are not manufactured by Seller, are subject to the warranty of their respective manufacturers. Normal maintenance, adjustments, or maintenance/wear parts, including without limitation, friction plates, glass, clutch, proper tightening of bolts, nuts and brake linings pipe fittings, adding or replacing of fluids, filters, wire rope, belts, screening media, rubber skirting, chute linings and paint, are not covered by this warranty and are the sole maintenance responsibility of Buyer.

Seller makes no other warranty, express or implied, and makes no warranty of merchantability or fitness for any particular purpose.

No employee or representative is authorised to modify this warranty unless such modification is made in writing and signed by an authorized officer of Seller.

Seller's obligation under this warranty shall not include duty, taxes, environmental fees, including without limitation, disposal or handling of tires, batteries, petrochemical items, or any other charges whatsoever, or any liability for direct, indirect, incidental, or consequential damages.

Improper maintenance, improper use, abuse, improper storage, operation beyond rated capacity, operation after discovery of defective or worn parts, accident, sabotage or alteration or repair of the equipment by persons not authorized by Seller shall render this warranty null and void. Seller reserves the right to inspect the installation of the product and review maintenance procedures to determine if the failure was due to improper maintenance, improper use, abuse, improper storage, operation beyond rated capacity, operation after discovery of defective or worn parts, or alteration or repair of the equipment by persons not authorized by Seller.

Parts Warranty:
Seller warrants the parts ordered from the Seller's parts department to be free of defect in material or workmanship for either (1) a period of 12 months after date of shipment from the factory or (2) 2000 hrs of use or (3) the balance of the remaining new equipment warranty, whichever occurs first. With respect to parts ordered from the Seller's parts department for Equipment that is no longer covered under this limited product warranty due to lapse of time or usage in excess of 4,000 hours of Critical Components, Seller warrants such parts to be free of defect in material or workmanship for a period of either 12 months after date of shipment from the factory or 2000 hrs of use, whichever occurs first.

Telematics.
If a telematics system is included with the Equipment, the telematics system is administered by a third party ("Teleservices Provider) and collects a range of operational data about the Equipment including, but not limited to, usage, performance and reliability. Buyer consents to Seller's obtaining such data from the Teleservices Provider for warranty, product improvement and customer support purposes. Buyer understands that the Equipment warranty is conditioned on the proper operation of the telematics system and Buyer shall not disable, tamper or interfere with the telematics system.

NO TRANSFERABILITY OF WARRANTY:
This warranty is limited to the original purchaser or original end-user if sold to a distributor, and is not assignable or otherwise transferable without the written agreement of Seller. Please contact your local distributor for additional details if needed.

ITEMS NOT COVERED BY SELLER WARRANTY

The following items are **NOT** covered under the Seller Warranty (the following list is not exhaustive):

1. Items sold by any individual, corporation, partnership or any other organization or legal entity that is not an authorized Seller distributor.
2. Components which are not manufactured by Seller are not covered by Seller's warranty. Such components are covered only by the warranty that is provided by the manufacturer of such components. Such components may include, but are not limited to, chassis, engines, air compressors, batteries, tires, customer supplied products.
3. Replacement of assemblies: Seller has the option to repair or replace any defective part or assembly. It is Seller's policy to refuse claims for the replacement of a complete assembly that is field repairable by the replacement or repair of defective part(s) within the assembly.
4. Normal Operational Maintenance Services and Wear Parts: Maintenance services and wear parts are excluded from warranty claims. Maintenance services and wear parts not covered include, but are not limited to, such items as: seals, gaskets, hoses, friction plates, glass, clutch and brake linings, filters, wire rope, exterior coatings, proper tightening of bolts, nuts and fittings, adding or replacing of fluids, filter, breathers, belts, nozzles, adjustments of any kind, services supplies such as hand cleaners, towels and lubricants, inspections, diagnostic time, travel time.
5. Transportation cost and/ or damage: Any damage caused by carrier handling is a transportation claim and should be filed immediately with the respective carrier.
6. Deterioration: Repairs, work required or parts exposed as the result of age, storage, weathering, lack of use, demonstration use, or use for transportation of corrosive chemicals.
7. Secondary Failures: Should the owner or operator continue to operate a machine after it has been noted that a failure has occurred, Seller will not be responsible under the warranty for resultant damage to other parts due to that continued operation.
8. Workmanship of Others: Seller does not accept responsibility for improper installation or labor costs or costs of any kind from personnel other than authorized Seller distributor personnel.
9. Stop and Go Warranty: Seller does not recognize "Stop and Go" warranties.
10. Incidental or Consequential Damage: SELLER SHALL NOT BE LIABLE FOR ANY INCIDENTAL OR CONSEQUENTIAL DAMAGES OF ANY KIND, INCLUDING, BUT NOT LIMITED TO, LOST PROFITS, LOSS OF PRODUCTION, INCREASED OVERHEAD, LOSS OF BUSINESS OPPORTUNITY, DELAYS IN PRODUCTION, COSTS OF REPLACEMENT COMPONENTS AND INCREASED COSTS OF OPERATION THAT MAY ARISE FROM THE BREACH OF THIS WARRANTY. Customer's sole remedy shall be limited to (at Seller's sole option) repair or replacement of the defective part.

THIS WARRANTY IS EXPRESSLY IN LIEU OF AND EXCLUDES ALL OTHER WARRANTIES, REPRESENTATIONS AND CONDITIONS, EXPRESS OR IMPLIED AND ALL OTHER STATUTORY, CONTRACTUAL, TORTIOUS AND COMMON LAW OBLIGATIONS OR LIABILITY ON SELLER'S PART ARE HEREBY EXPRESSLY EXCLUDED TO THE MAXIMUM EXTENT PERMITTED BY LAW. THERE ARE NO WARRANTIES THAT EXTEND BEYOND THE LIMITED WARRANTY CONTAINED HEREIN.

Seller neither assumes nor authorizes any other person to assume for Seller any other liability in connection with the sale of Seller's Equipment. This warranty shall not apply to any of Seller's Equipment or any part thereof which has been subject to misuse, alteration, abuse, negligence, accident, acts of God or sabotage. No action by any party shall operate to extend or revive this limited warranty without the prior written consent of Seller. In the event that any provision of this warranty is held unenforceable for any reason, the remaining provisions shall remain in full force and effect.

IN THE EVENT OF ANY BREACH OF THE WARRANTY BY SELLER, SELLER'S LIABILITY SHALL BE LIMITED EXCLUSIVELY TO THE REMEDIES (AT SELLER'S SOLE OPTION) OF REPAIR OR REPLACEMENT OF ANY DEFECTIVE EQUIPMENT COVERED BY THE WARRANTY. IN NO EVENT SHALL SELLER, OR ANY SUBSIDIARY OR DIVISION THEREOF BE LIABLE FOR ANY: (A) LOST PROFITS AND/OR BUSINESS INTERRUPTION (WHETHER DIRECT OR INDIRECT); AND (B) INDIRECT, INCIDENTAL, CONSEQUENTIAL (WHETHER DIRECT OR INDIRECT) OR OTHER DAMAGES OR LOSSES OF ANY KIND, RESULTING FROM ANY BREACH OF WARRANTY, REPRESENTATION OR CONDITION, EXPRESS OR IMPLIED, OR ANY OTHER TERMS OF THIS WARRANTY, OR ANY BREACH OF ANY DUTY OR OBLIGATION IMPOSED BY STATUTE, CONTRACT, TORT OR COMMON LAW OR OTHERWISE (WHETHER OR NOT CAUSED BY THE NEGLIGENCE OF THE SELLER, ITS EMPLOYEES, AGENTS OR OTHERWISE), INCLUDING, WITHOUT LIMITATION, LOSS OF USE, LOST PROFITS OR REVENUES, LABOUR OR EMPLOYMENT COSTS, LOSS OF USE OF OTHER EQUIPMENT, DOWNTIME OR HIRE CHARGES, THIRD PARTY REPAIRS, IMPROPER PERFORMANCE OR WORK, LOSS OF SERVICE OF PERSONNEL, LOSS OF CONTRACT OR OPPORTUNITY AND PENALTIES OF ANY KIND, OR FAILURE OF EQUIPMENT TO COMPLY WITH ANY APPLICABLE LAWS. THE SELLER'S LIABILITY TO THE BUYER SHALL NOT IN ANY EVENT EXCEED THE PURCHASE PRICE OF THE EQUIPMENT, PROVIDED THAT NOTHING CONTAINED IN THIS LIMITED PRODUCT WARRANTY SHALL OPERATE TO EXCLUDE THE SELLER'S LIABILITY FOR DEATH OR PERSONAL INJURY.

USA SALES ONLY

LIMITED PRODUCT WARRANTY (USA)

Terex GB Ltd. and Terex USA, LLC (hereafter referred to collectively as "Seller") warrants its new Equipment, to be free of defects in material or workmanship for a period of (i) 12 months from the date the Equipment is first placed into service, whether such Equipment is sold, rented or leased or (ii) 2,000 hours of use, whichever first occurs, provided that in no event shall this warranty extend beyond a period of 24 months from the date of shipment from the factory; provided that (1) the Buyer or the end-user sends Seller written notice of the defect within sixty (60) days of its discovery and establishes to the Seller's satisfaction that: (i) the Equipment has been maintained and operated within the limits of rated and normal usage, and that there have been no alterations to it; and (ii) the defect did not result in any manner from the intentional or negligent action or inaction by Buyer or the end-user or any of their respective agents or employees or any person using it and (2) a new machine registration certificate or the commissioning documents have been completed, signed and delivered to Seller within thirty (30) days of the equipment's "in-service" date. If requested by Seller, Buyer must return the defective equipment to Seller's manufacturing facility, or other location designated by Seller, for inspection, and if Buyer cannot establish that conditions (1) (i) and (1) (ii) above have been met, then this warranty shall not cover the alleged defect.

Subject to the Buyer establishing that conditions (1)(i) and 1(ii) above have been met, Seller warrants all Critical Components (as defined herein) to be free, under normal use and service, of any defects in manufacture or materials for a period of: (1) twenty four (24) months from the date of commissioning, (2) 4000 hours of use, or (3) Thirty Six (36) months the date of shipment from the factory, whichever occurs first. For the purposes of this warranty, Critical Components shall mean

- Cone machines :- Main frame, Upper frame Countershaft and Housing, Drive pulley Drive Pinion and Gear, Eccentric, Wedge Ring (Excluding Pads)
- Jaw Machines: - Mainframe including Cross Beam, Eccentric Shaft, Jaw Stock, Toggle Beam, Flywheels.
- Impactor Machines: - Rotor, Main shaft, Crusher Body and Drive Pulley.
- Screen Boxes; - Screen Box Welded Assembly, Screen Box Sub frame, Main Shaft.

Seller's obligation and liability under this warranty is expressly limited to, at Seller's sole option, repairing or replacing, with new or remanufactured parts or components, any part, which appears to Seller upon inspection to have been defective in material or workmanship. Such parts shall be provided at no cost to the owner. If requested by Seller, components or parts for which a warranty claim is made shall be returned to Seller at a location designated by Seller. All components and parts replaced under this limited product warranty become the property of Seller.

This warranty shall be null and void if parts (including wear parts) other than genuine OEM Seller parts are used in the Equipment.

Accessories, assemblies and components included in the Equipment, which are not manufactured by Seller, are subject to the warranty of their respective manufacturers. Normal maintenance, adjustments, or maintenance/wear parts, including without limitation friction plates, glass, clutch and brake linings, filters, wire rope and paint, are not covered by this warranty and are the sole maintenance responsibility of Buyer.

Seller makes no other warranty, express or implied, and makes no warranty of merchantability or fitness for any particular purpose.

No employee or representative is authorised to modify this warranty unless such modification is made in writing and signed by an authorized officer of Seller.

Seller's obligation under this warranty shall not include duty, taxes, environmental fees, including without limitation, disposal or handling of tires, batteries, petrochemical items, or any other charges whatsoever, or any liability for direct, indirect, incidental, or consequential damages.

Improper maintenance, improper use, abuse, improper storage, operation beyond rated capacity, operation after discovery of defective or worn parts, accident, sabotage or alteration or repair of the equipment by persons not authorized by Seller shall render this warranty null and void. Seller reserves the right to inspect the installation of the product and review maintenance procedures to determine if the failure was due to improper maintenance, improper use, abuse, improper storage, operation beyond rated capacity, operation after discovery of defective or worn parts, or alteration or repair of the equipment by persons not authorized by Seller.

Parts Warranty:
Seller warrants the parts ordered from the Seller's parts department to be free of defect in material or workmanship for either (1) a period of 12 months after date of shipment from the factory or (2) 2000 hrs of use or (3) the balance of the remaining new equipment warranty, whichever occurs first. With respect to parts ordered from the Seller's parts department for Equipment that is no longer covered under this limited product warranty due to lapse of time or usage in excess of 4,000 hours of Critical Components, Seller warrants such parts to be free of defect in material or workmanship for a period of either 12 months after date of shipment from the factory or 2000 hrs of use, whichever occurs first.

Telematics.
If a telematics system is included with the Equipment, the telematics system is administered by a third party ("Teleservices Provider) and collects a range of operational data about the Equipment including, but not limited to, usage, performance and reliability. Buyer consents to Seller's obtaining such data from the Teleservices Provider for warranty, product improvement and customer support purposes. Buyer understands that the Equipment warranty is conditioned on the proper operation of the telematics system and Buyer shall not disable, tamper or interfere with the telematics system.

NO TRANSFERABILITY OF WARRANTY:
This warranty is limited to the original purchaser or original end-user if sold to a distributor, and is not assignable or otherwise transferable without the written agreement of Seller. Please contact your local distributor for additional details if needed.

ITEMS NOT COVERED BY SELLER WARRANTY

The following items are **NOT** covered under the Seller Warranty (the following list is not exhaustive):

1. Items sold by any individual, corporation, partnership or any other organization or legal entity that is not an authorized Seller distributor.
2. Components which are not manufactured by Seller are not covered by Seller's warranty. Such components are covered only by the warranty that is provided by the manufacturer of such components. Such components may include, but are not limited to, chassis, engines, air compressors, batteries, tires, customer supplied products.
3. Replacement of assemblies: Seller has the option to repair or replace any defective part or assembly. It is Seller's policy to refuse claims for the replacement of a complete assembly that is field repairable by the replacement or repair of defective part(s) within the assembly.
4. Normal Operational Maintenance Services and Wear Parts: Maintenance services and wear parts are excluded from warranty claims. Maintenance services and wear parts not covered include, but are not limited to, such items as: seals, gaskets, hoses, friction plates, glass, clutch and brake linings, filters, wire rope, exterior coatings, proper tightening of bolts, nuts and fittings, adding or replacing of fluids, filter, breathers, belts, nozzles, adjustments of any kind, services supplies such as hand cleaners, towels and lubricants, inspections, diagnostic time, travel time.
5. Transportation cost and/ or damage: Any damage caused by carrier handling is a transportation claim and should be filed immediately with the respective carrier.
6. Deterioration: Repairs, work required or parts exposed as the result of age, storage, weathering, lack of use, demonstration use, or use for transportation of corrosive chemicals.
7. Secondary Failures: Should the owner or operator continue to operate a machine after it has been noted that a failure has occurred, Seller will not be responsible under the warranty for resultant damage to other parts due to that continued operation.
8. Workmanship of Others: Seller does not accept responsibility for improper installation or labor costs or costs of any kind from personnel other than authorized Seller distributor personnel.
9. Stop and Go Warranty: Seller does not recognize "Stop and Go" warranties.
10. INCIDENTAL OR CONSEQUENTIAL DAMAGE: SELLER SHALL NOT BE LIABLE FOR ANY INCIDENTAL OR CONSEQUENTIAL DAMAGES OF ANY KIND, INCLUDING, BUT NOT LIMITED TO, LOST PROFITS, LOSS OF PRODUCTION, INCREASED OVERHEAD, LOSS OF BUSINESS OPPORTUNITY, DELAYS IN PRODUCTION, COSTS OF REPLACEMENT COMPONENTS AND INCREASED COSTS OF OPERATION THAT MAY ARISE FROM THE BREACH OF THIS WARRANTY. CUSTOMER'S SOLE REMEDY SHALL BE LIMITED TO (AT SELLER'S SOLE OPTION) REPAIR OR REPLACEMENT OF THE DEFECTIVE PART.

THIS WARRANTY IS EXPRESSLY IN LIEU OF AND EXCLUDES ALL OTHER WARRANTIES, EXPRESS OR IMPLIED (INCLUDING THE WARRANTIES OF MERCHANTABILITY AND FITNESS FOR A PARTICULAR PURPOSE) AND ALL OTHER OBLIGATIONS OR LIABILITY ON SELLER'S PART. THERE ARE NO WARRANTIES THAT EXTEND BEYOND THE LIMITED WARRANTY CONTAINED HEREIN.

Seller neither assumes nor authorizes any other person to assume for Seller any other liability in connection with the sale of Seller's equipment. This warranty shall not apply to any of Seller's equipment or any part thereof which has been subject to misuse, alteration, abuse, negligence, accident, acts of God or sabotage. No action by any party shall operate to extend or revive this limited warranty without the prior written consent of Seller. In the event that any provision of this warranty is held unenforceable for any reason, the remaining provisions shall remain in full force and effect.

IN THE EVENT OF ANY BREACH OF THE WARRANTY BY SELLER, SELLER'S LIABILITY SHALL BE LIMITED EXCLUSIVELY TO THE REMEDIES (AT SELLER'S SOLE OPTION) OF REPAIR OR REPLACEMENT OF ANY DEFECTIVE EQUIPMENT COVERED BY THE WARRANTY. IN NO EVENT SHALL SELLER, OR ANY AFFILIATE, SUBSIDIARY OR DIVISION THEREOF BE LIABLE FOR ANY A) LOST PROFITS AND/OR BUSINESS INTERRUPTION (WHETHER DIRECT OR INDIRECT); AND (B) INDIRECT, INCIDENTAL, CONSEQUENTIAL (WHETHER DIRECT OR INDIRECT) OR OTHER DAMAGES OR LOSSES OF ANY KIND, RESULTING FROM A BREACH OF WARRANTY INCLUDING, WITHOUT LIMITATION, LABOR COSTS, LOSS OF USE OF OTHER EQUIPMENT, THIRD PARTY REPAIRS, LOST PROFITS, LOST TIME, TOWING OR HAULING OF EQUIPMENT, RENTAL COSTS, PERSONAL INJURY, EMOTIONAL OR MENTAL DISTRESS, IMPROPER PERFORMANCE OR WORK, PENALTIES OF ANY KIND, LOSS OF SERVICE OF PERSONNEL, OR FAILURE OF EQUIPMENT TO COMPLY WITH ANY FEDERAL, STATE OR LOCAL LAWS.

To register the warranty of this machine please visit: http://www.powerscreenwarranty.com.

Depending on the engine fitted to your machine you must also register the engine of your product via:

Catapillilar

http://www.cat.com/cda/layout?m=37532&x=7&id=3836261

Scania

http://www.scania.co.uk/engines/service/start-up-report/index.aspx

Telematics

If a telematics system is included with the Equipment, the telematics system is administered by a third party and collects a range of operational data about the Equipment including, but not limited to, usage, performance and reliability. Buyer consents to Seller's obtaining such data for warranty, product improvement and customer support purposes. Buyer understands that the Equipment warranty is conditioned on the proper operation of the telematics system and Buyer shall not disable, tamper or interfere with the telematics system.

To access telematics system information visit our website:

http://powerscreen.com/en/pulse/

Table of Content

Appendix C Schematics C-2

(1) MCU 200 Rear Connections C-2
(2) Basic Wiring of MCU 200 ..... C-2
(3) Tier 3 Schematics C-3
(4) Tier 4 Schematics C-5
(5) Dual Power Schematics C-7
(6) Hydraulic Diagrams C-9
(a) Tier 3 - 2 Deck Schematics C-9
(b) Tier 3 - 3 Deck Schematics C-10
(c) Tier 4 - 2 Deck Schematics C-11
(d) Tier 4 - 3 Deck Schematics C-12
(e) Constant Speed 2 Deck Schematics C-13
(f) Constant Speed 3 Deck Schematics C-14
(g) Tier 3 Dual Power 2 Deck Tipping Grid Schematics C-15
(h) Tier 3 Dual Power 3 Deck Tipping Grid Schematics C-16
(i) Tier 4 Dual Power 2 Deck Tipping Grid Schematics C-17
(j) Tier 4 Dual Power 3 Deck Hydraulic Auxiliary Conveyor Tipping Grid Schematics C-18

Appendix C Schematics

(1) MCU 200 Rear Connections

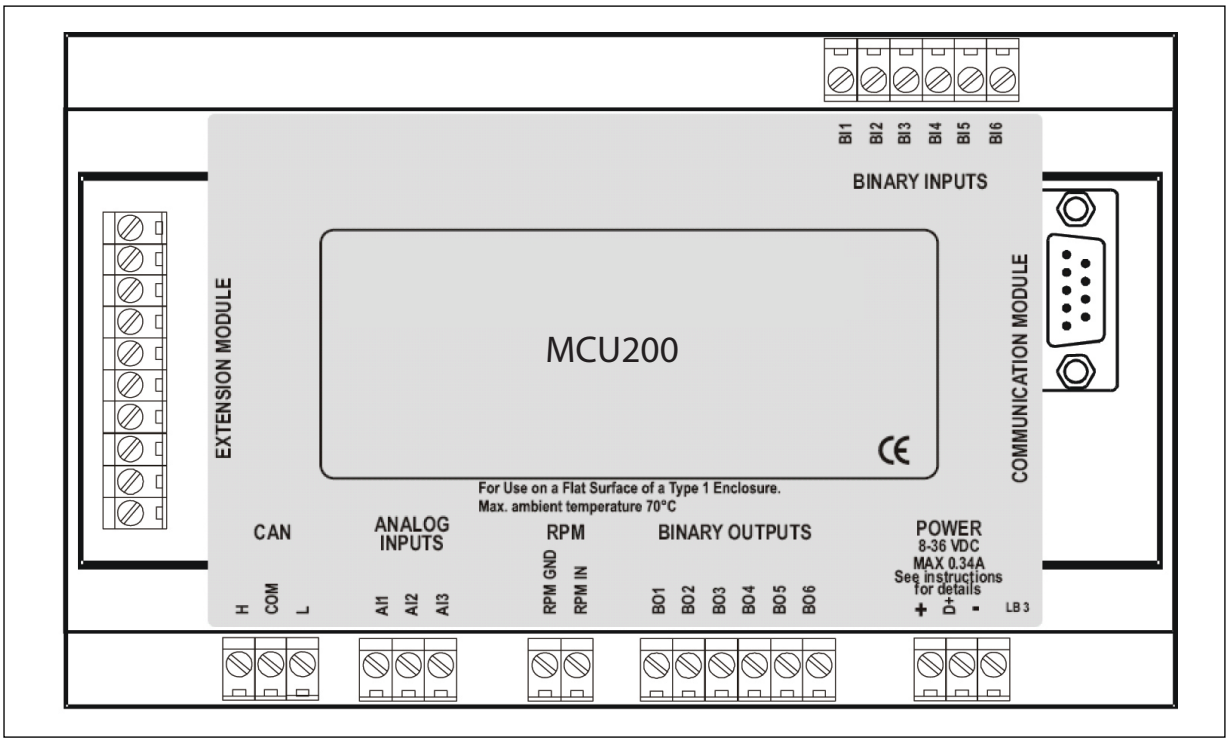

(2) Basic Wiring of MCU 200

See appropriate schematics for more detailed drawings.

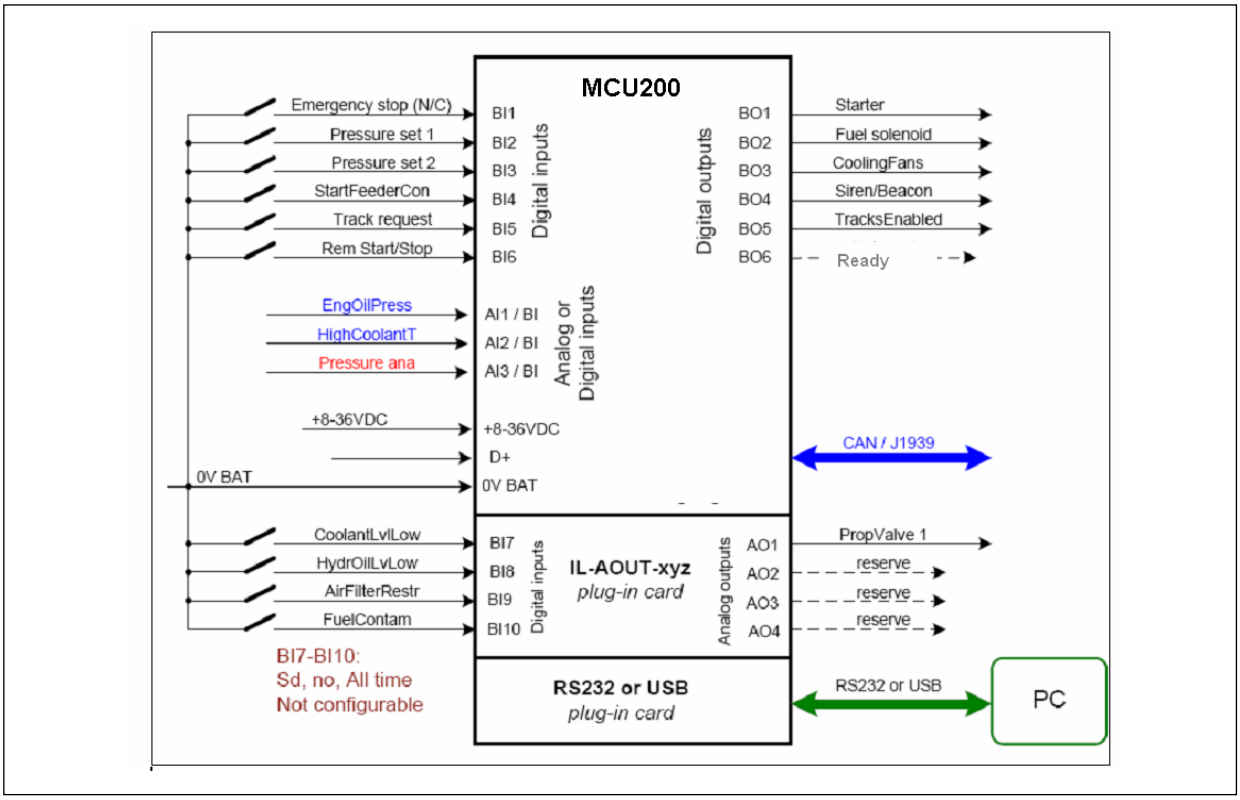

(3) Tier 3 Schematics

Intentionally Left Blank

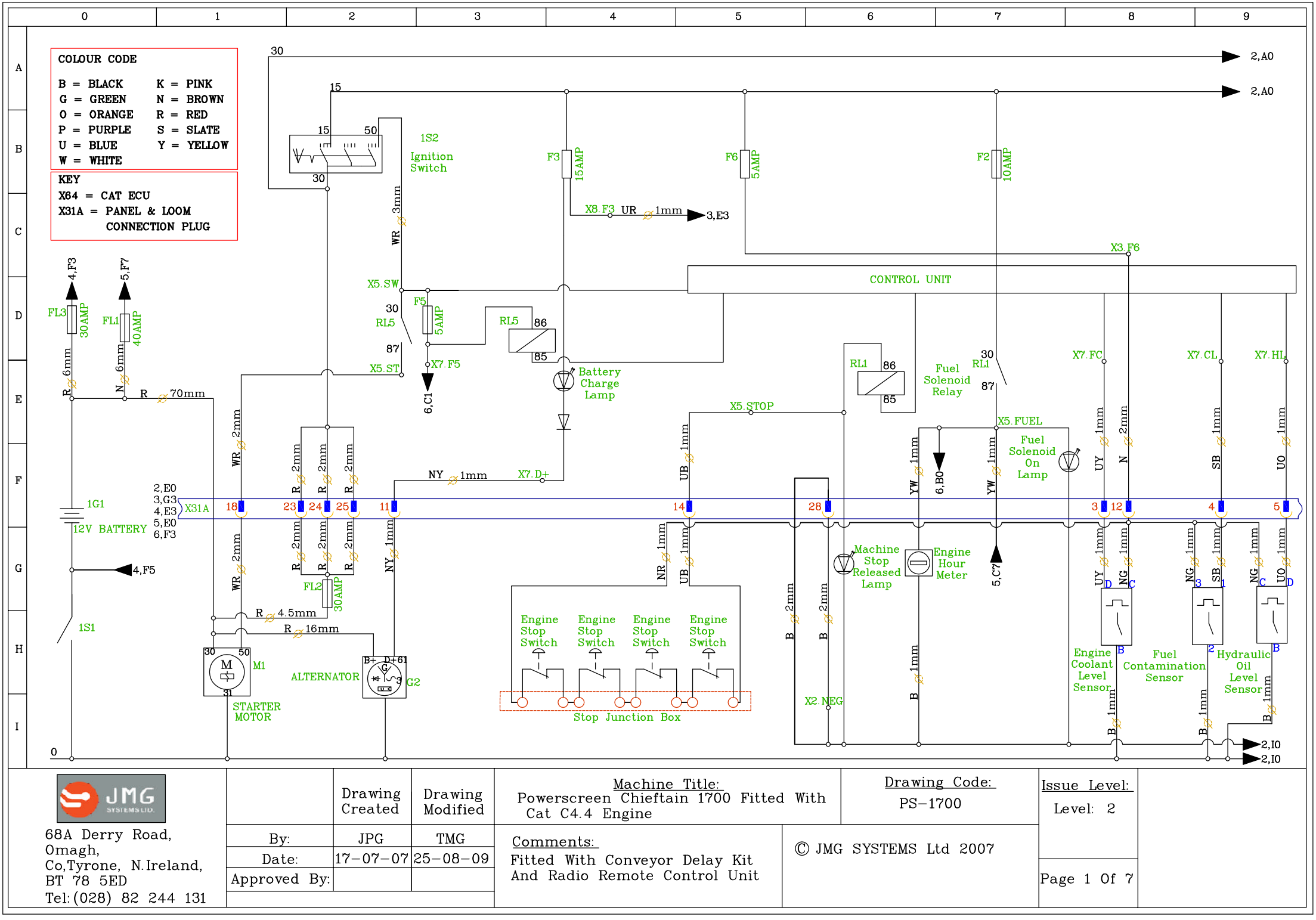

JMG SYSTEMS LTD.

68A Derry Road,
Omagh,
Co,Tyrone, N.Ireland,
BT 78 5ED
Tel:(028) 82 244 131

	Drawing Created	Drawing Modified
By:	JPG	TMG
Date:	17-07-07	25-08-09
Approved By:		

Machine Title:
Powerscreen Chieftain 1700 Fitted With Cat C4.4 Engine

Drawing Code:
PS-1700

Issue Level:
Level: 2

Comments:
Fitted With Conveyor Delay Kit And Radio Remote Control Unit

© JMG SYSTEMS Ltd 2007

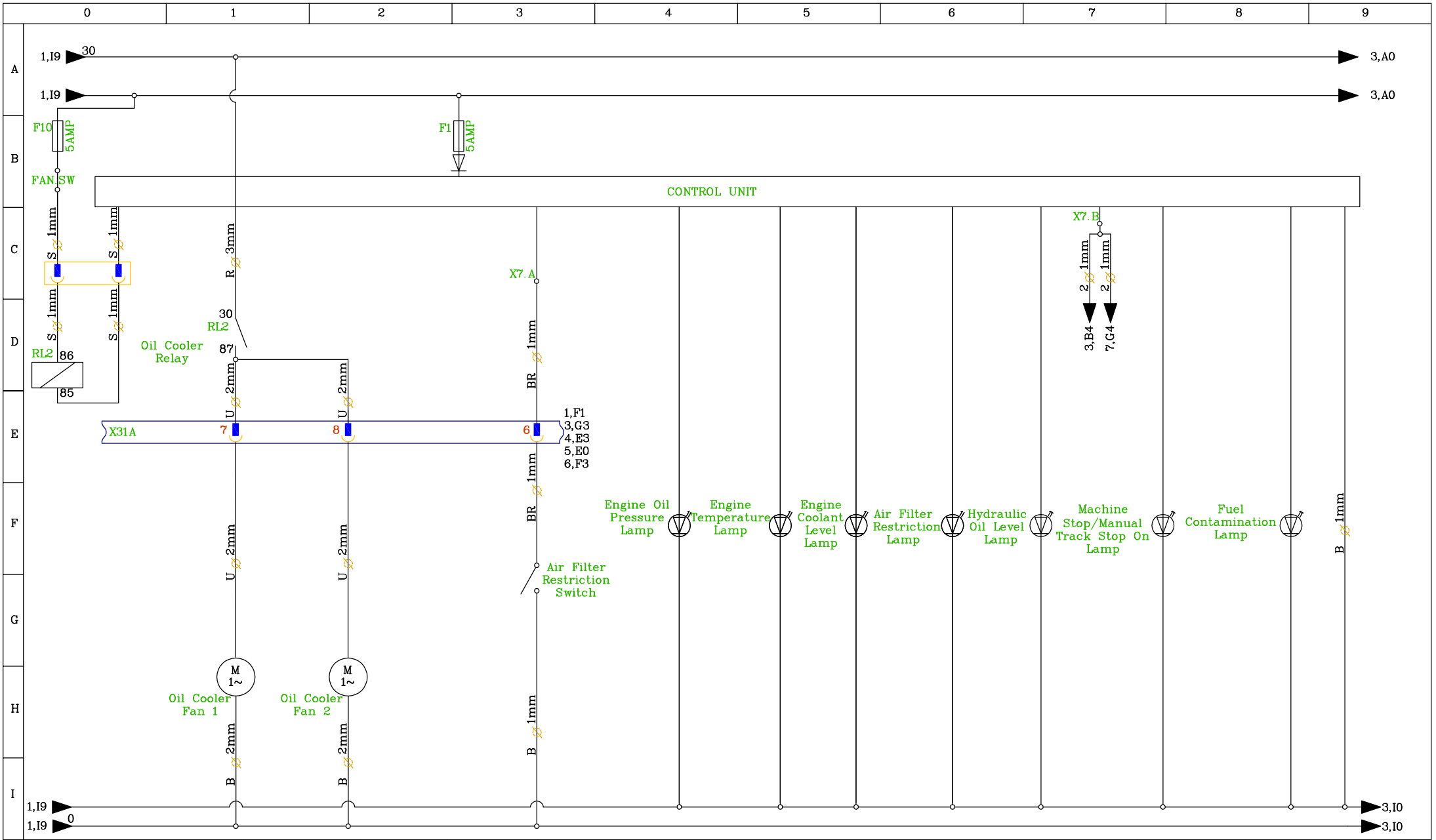

JMG SYSTEMS LTD.

68A Derry Road,
Omagh,
Co,Tyrone, N.Ireland,
BT 78 5ED
Tel:(028) 82 244 131

	Drawing Created	Drawing Modified
By:	JPG	TMG
Date:	17-07-07	25-08-09
Approved By:		

Machine Title:
Powerscreen Chieftain 1700 Fitted With Cat C4.4 Engine

Drawing Code:
PS-1700

Issue Level:
Level: 2

Comments:
Fitted With Conveyor Delay Kit
And Radio Remote Control Unit

© JMG SYSTEMS Ltd 2007

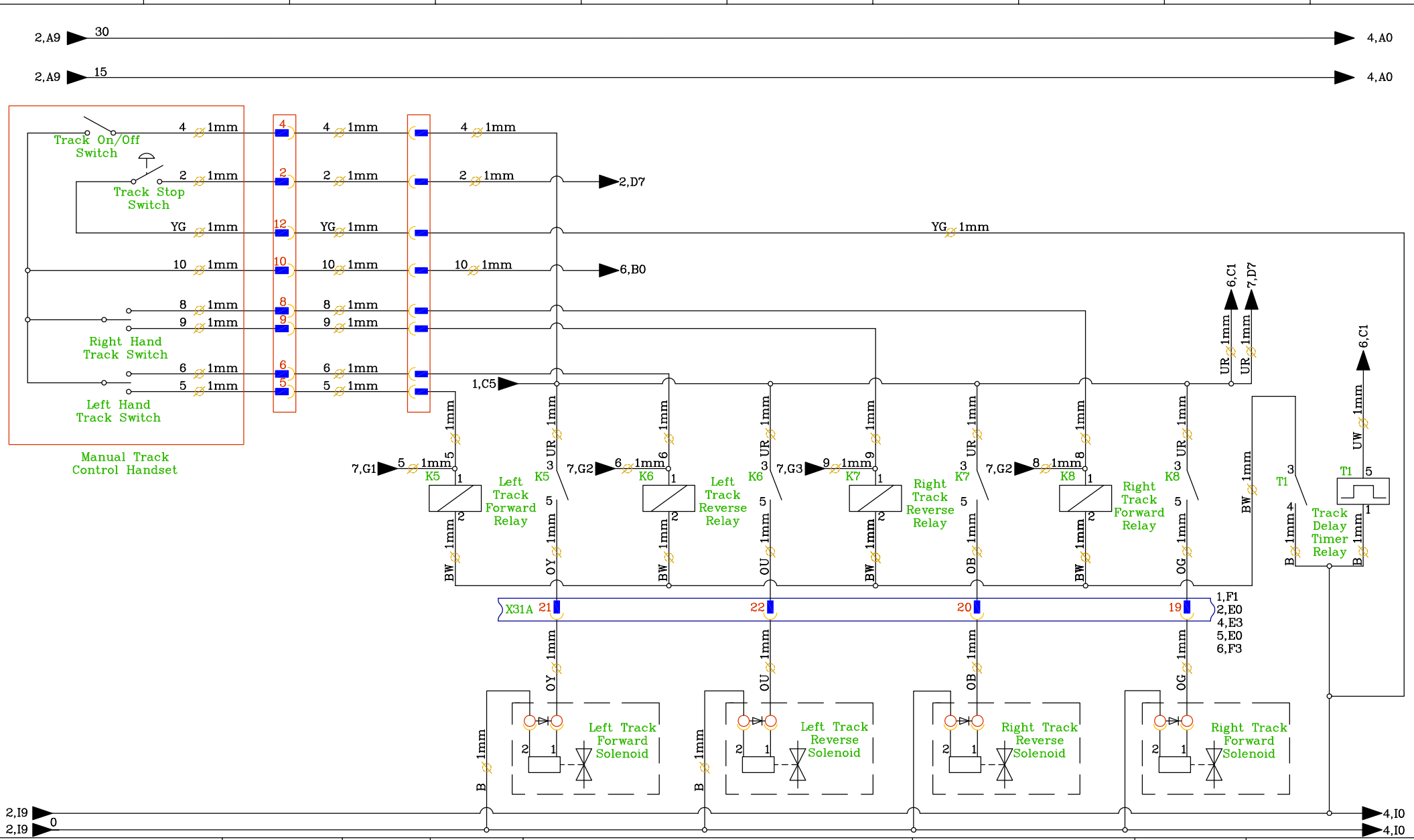

JMG SYSTEMS LTD.

68A Derry Road,
Omagh,
Co,Tyrone, N.Ireland,
BT 78 5ED
Tel:(028) 82 244 131

	Drawing Created	Drawing Modified
By:	JPG	TMG
Date:	17-07-07	25-08-09
Approved By:		

Machine Title:
Powerscreen Chieftain 1700 Fitted With Cat C4.4 Engine

Drawing Code:
PS-1700

Issue Level:
Level: 2

Comments:
Fitted With Conveyor Delay Kit And Radio Remote Control Unit

© JMG SYSTEMS Ltd 2007

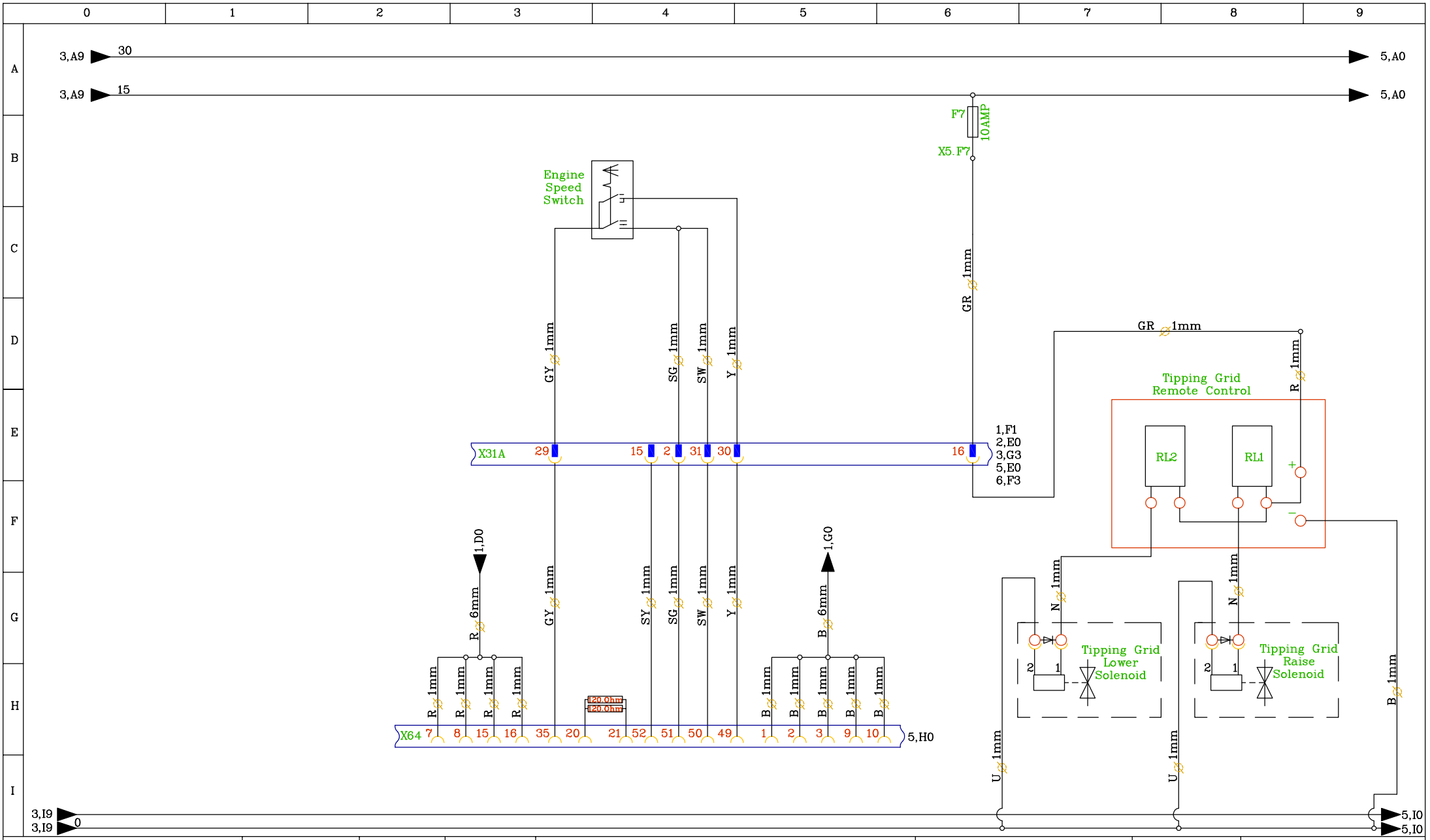

JMG SYSTEMS LTD.		Drawing Created	Drawing Modified	Machine Title: Powerscreen Chieftain 1700 Fitted With Cat C4.4 Engine	Drawing Code: PS–1700
68A Derry Road, Omagh, Co,Tyrone, N.Ireland, BT 78 5ED Tel:(028) 82 244 131	By:	JPG	TMG		Issue Level: Level: 2
	Date:	17–07–07	25–08–09	Comments: Fitted With Conveyor Delay Kit And Radio Remote Control Unit	
	Approved By:				Page 4 Of 7

© JMG SYSTEMS Ltd 2007

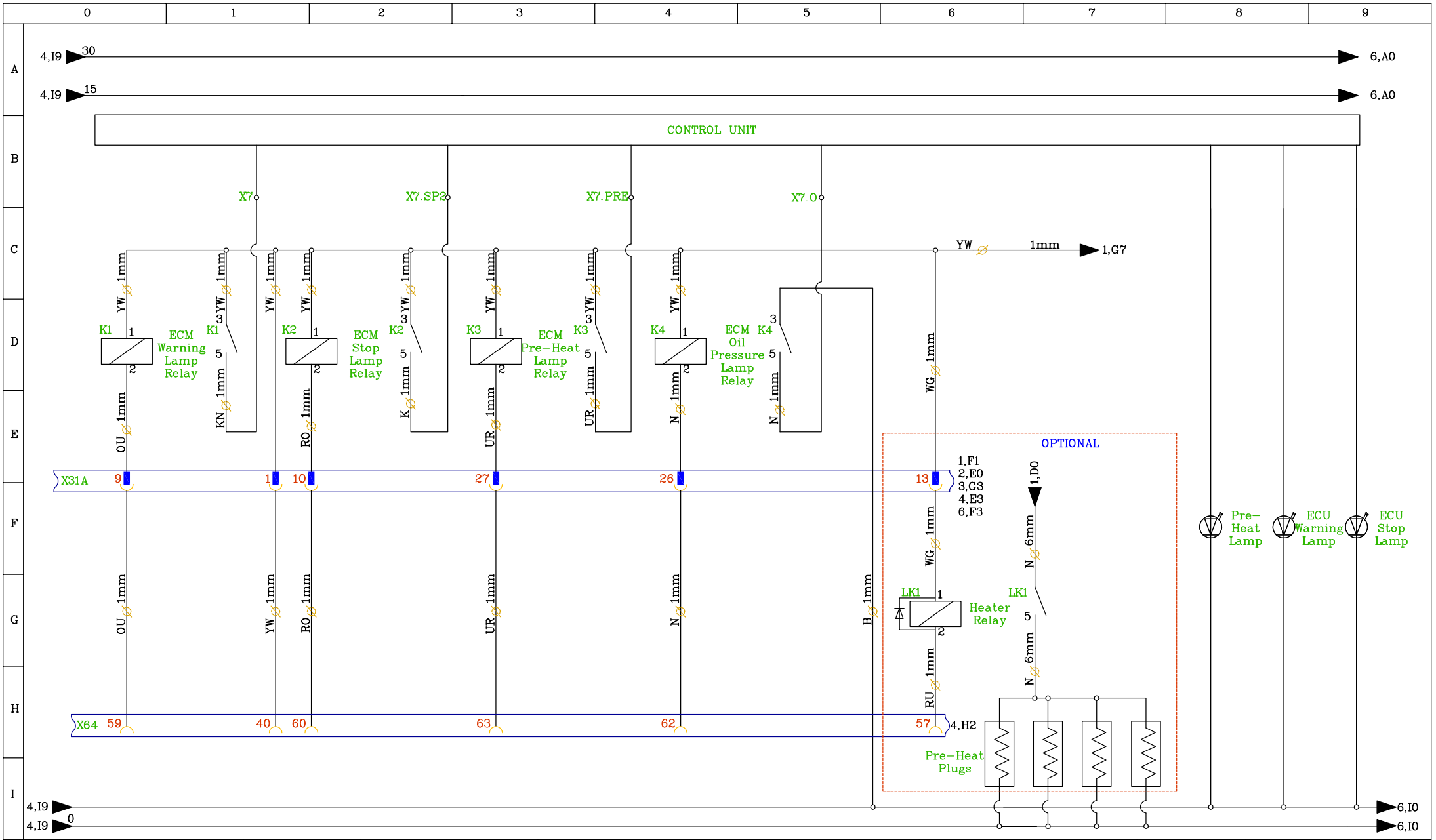

68A Derry Road,
Omagh,
Co,Tyrone, N.Ireland,
BT 78 5ED
Tel:(028) 82 244 131

	Drawing Created	Drawing Modified
By:	JPG	TMG
Date:	17-07-07	25-08-09
Approved By:		

Machine Title:
Powerscreen Chieftain 1700 Fitted With Cat C4.4 Engine

Drawing Code:
PS-1700

Issue Level:
Level: 2

Comments:
Fitted With Conveyor Delay Kit
And Radio Remote Control Unit

© JMG SYSTEMS Ltd 2007

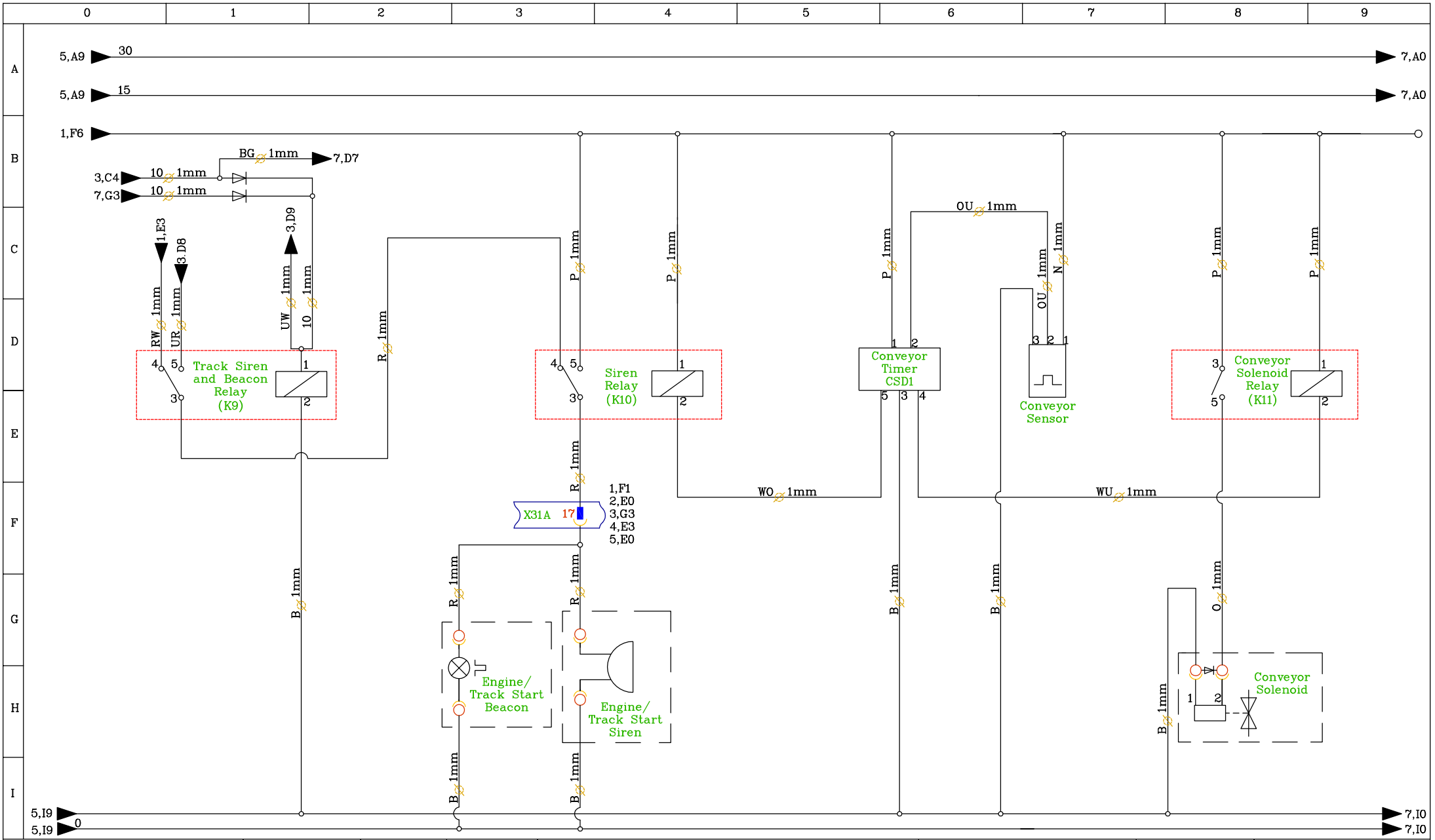

68A Derry Road,
Omagh,
Co,Tyrone, N.Ireland,
BT 78 5ED
Tel:(028) 82 244 131

	Drawing Created	Drawing Modified
By:	JPG	TMG
Date:	10-06-08	25-08-09
Approved By:		

Machine Title:
Powerscreen Chieftain 1700 Fitted With Cat C4.4 Engine

Drawing Code:
PS-1700

Issue Level:
Level: 2

Comments:
Fitted With Conveyor Delay Kit And Radio Remote Control Unit

© JMG SYSTEMS Ltd 2007

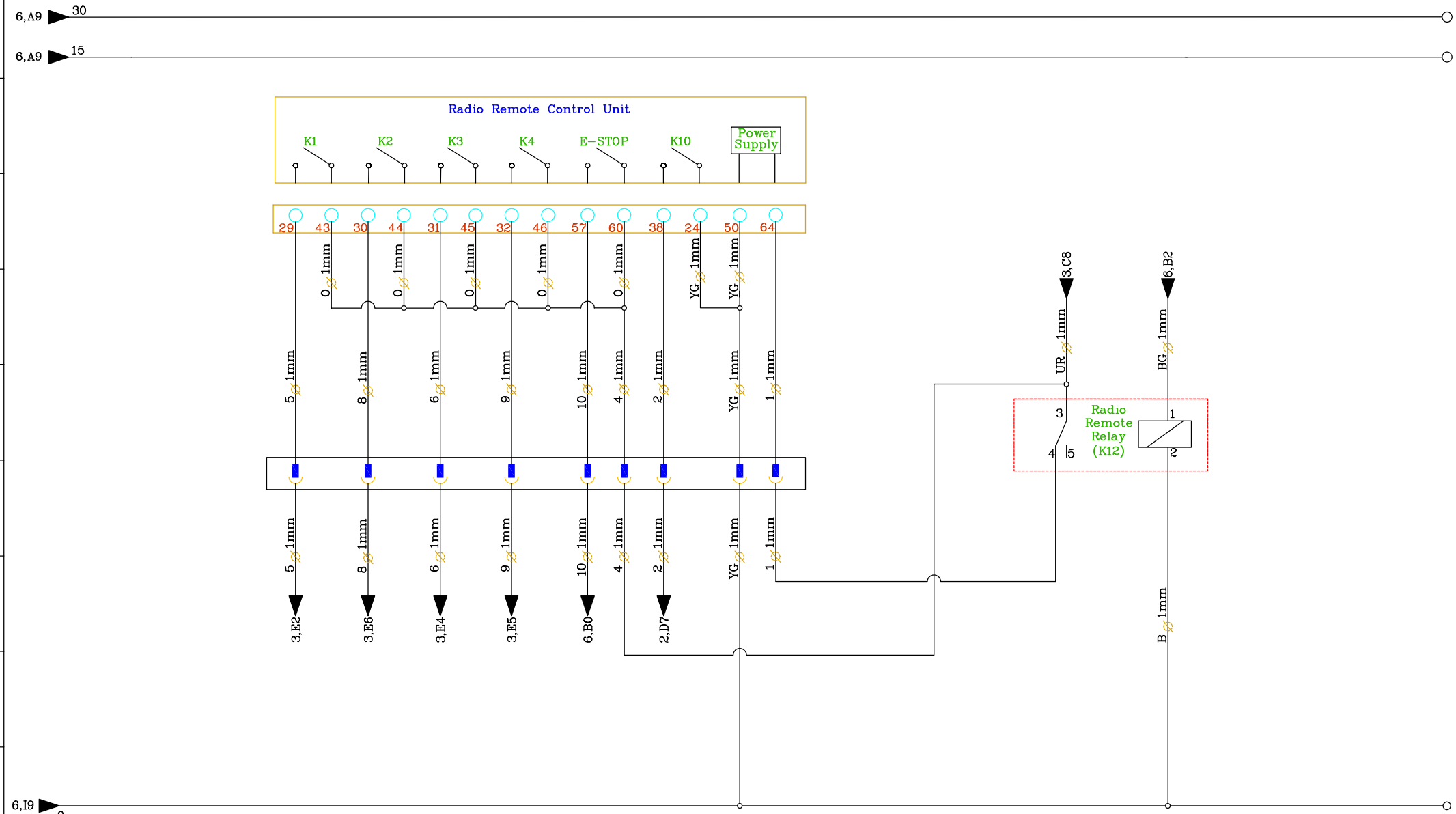

JMG SYSTEMS LTD.

68A Derry Road,
Omagh,
Co,Tyrone, N.Ireland,
BT 78 5ED
Tel:(028) 82 244 131

	Drawing Created	Drawing Modified
By:	JPG	TMG
Date:	10-06-08	25-08-09
Approved By:		

Machine Title:
Powerscreen Chieftain 1700 Fitted With Cat C4.4 Engine

Drawing Code:
PS-1700

Issue Level:
Level: 2

Comments:
Fitted With Conveyor Delay Kit
And Radio Remote Control Unit

© JMG SYSTEMS Ltd 2007

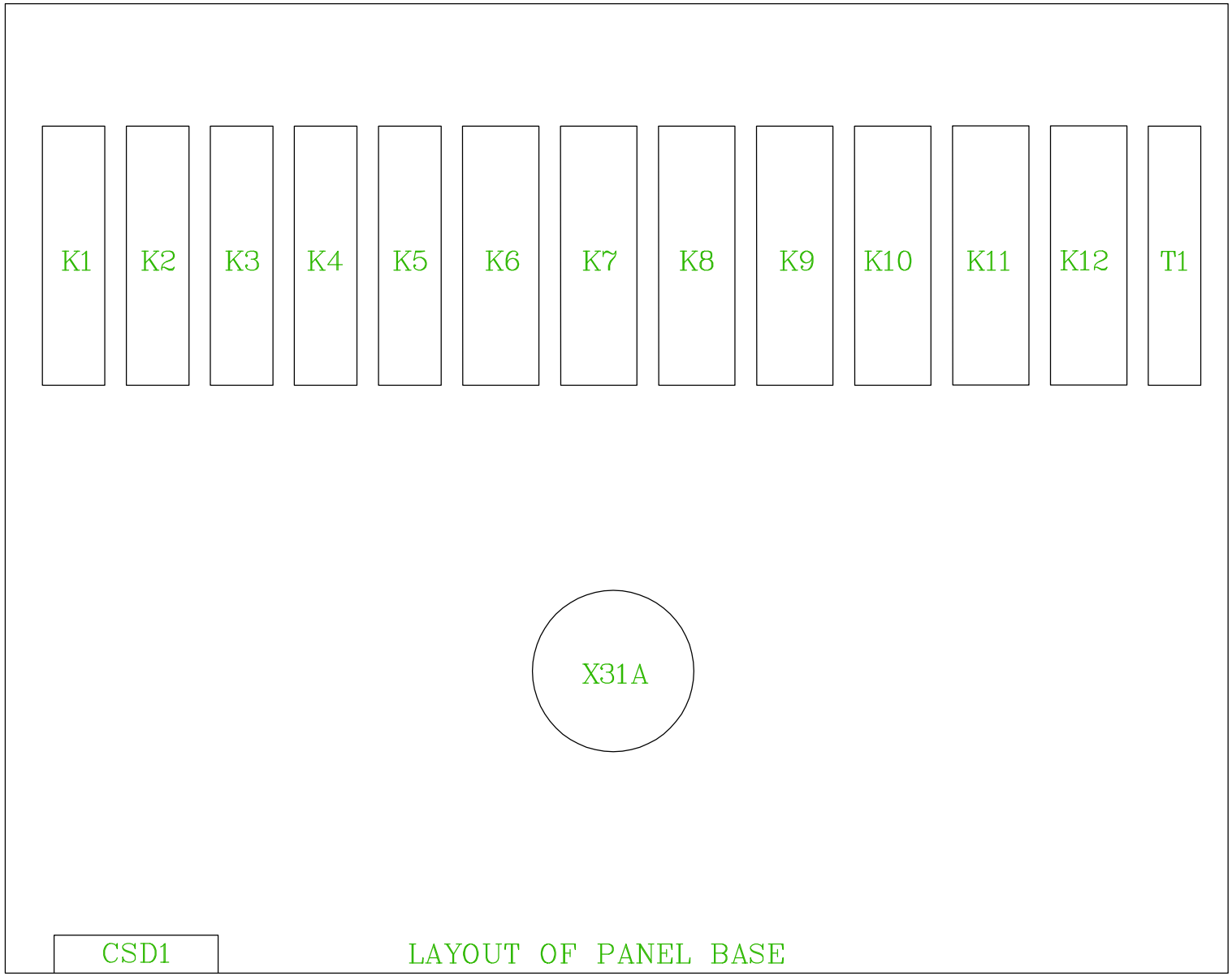

68A Derry Road,
Omagh,
Co,Tyrone, N.Ireland,
BT 78 5ED
Tel:(028) 82 244 131

	Drawing Created	Drawing Modified
By:	JPG	TMG
Date:	17-07-07	25-08-09
Approved By:		

Machine Title:
Powerscreen Chieftain 1700 Fitted With Cat C4.4 Engine

Drawing Code:
PS-1700

Issue Level:
Level: 2

Comments:
Layout Of Panel

© JMG SYSTEMS Ltd 2007

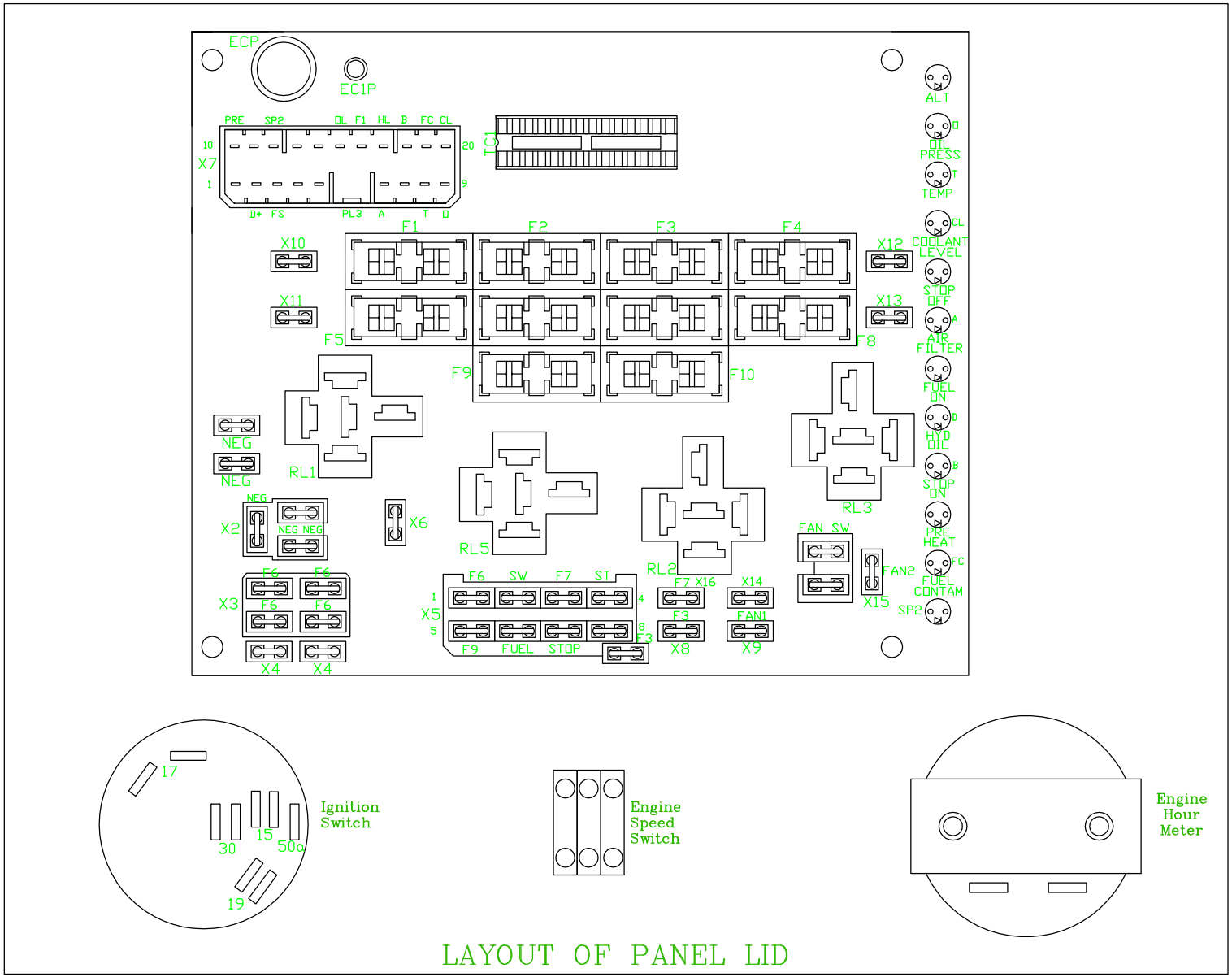

LAYOUT OF PANEL LID

68A Derry Road,
Omagh,
Co,Tyrone, N.Ireland,
BT 78 5ED
Tel:(028) 82 244 131

	Drawing Created	Drawing Modified
By:	JPG	TMG
Date:	17-07-07	25-08-09
Approved By:		

Machine Title:
Powerscreen Chieftain 1700 Fitted With Cat C4.4 Engine

Drawing Code:
PS-1700

Issue Level:
Level: 2

Comments:
Layout Of Panel

© JMG SYSTEMS Ltd 2007

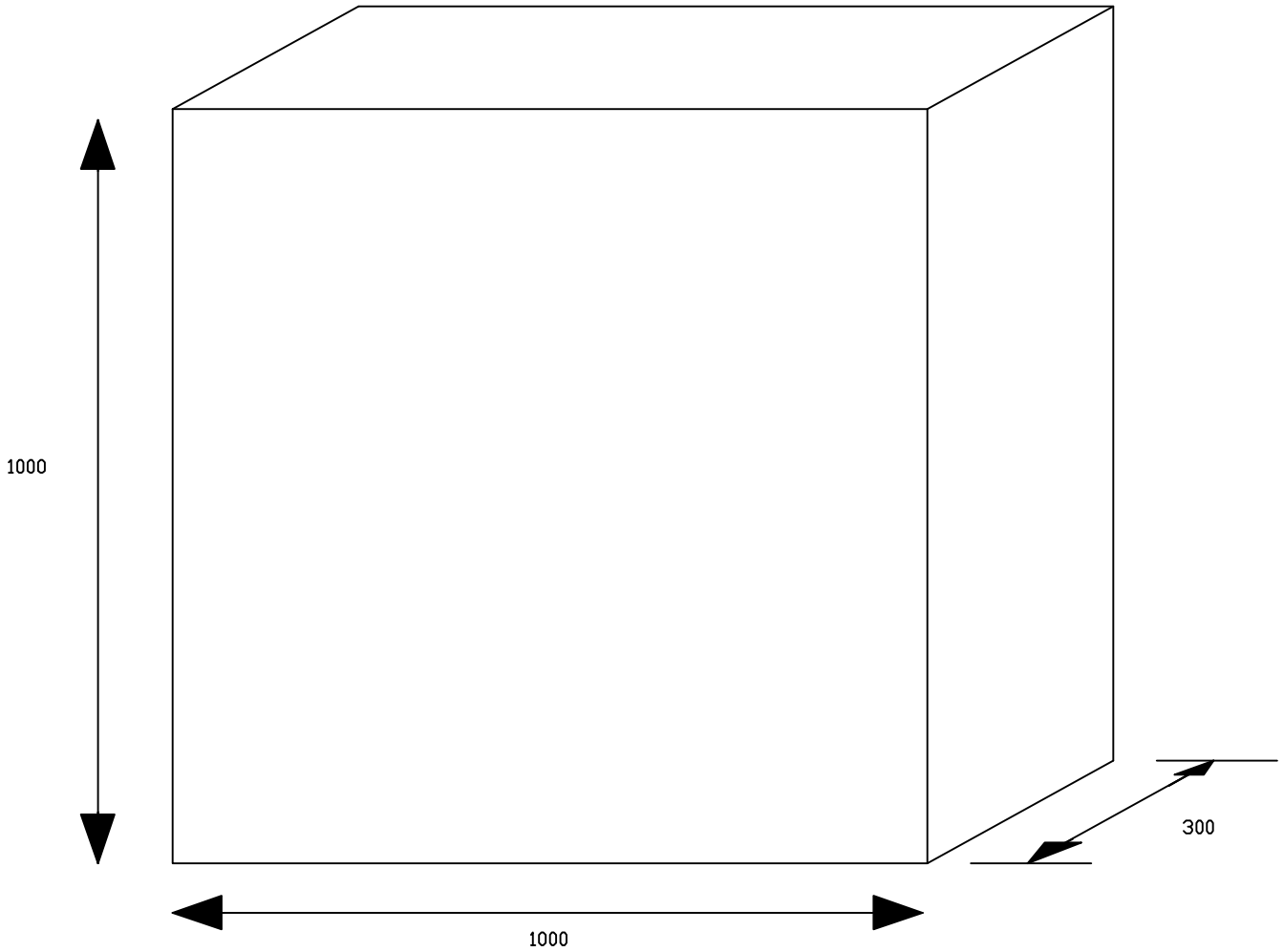

REV.	DATE	BY	DETAILS	ECO
4	02/02/10	PMK	UPDATED FOR PNP AND MPESP-1006	
3	21/04/09	SL	AS BUILT	

NOTES
NOT TO SCALE

DRAWING TITLE
ELECTRICAL SCHEMATICS

MACHINE TYPE
CH1700 DUAL POWER
C/W DEUTZ 2013 E ENGINE

THE INFORMATION HEREON IS THE PROPERTY OF TEREX CORPORATION AND/OR ITS SUBSIDIARIES. WITHOUT WRITTEN PERMISSION, ANY COPYING, TRANSMITTAL TO OTHERS, AND ANY USE EXCEPT THAT FOR WHICH IT IS LOANED, IS PROHIBITED.

POWERSCREEN
POWERSCREEN INTERNATIONAL DISTRIBUTION LTD
200 COOLDAMS ROAD, DUNGANNON,
CO TYRONE, N IRELAND
TEL 02887 749711 FAX 02887 749759

ECO

POWERSCREEN ELECTRICAL DEPARTMENT

SHEET 1 OF 18

PRD-1236

REV 0

A3

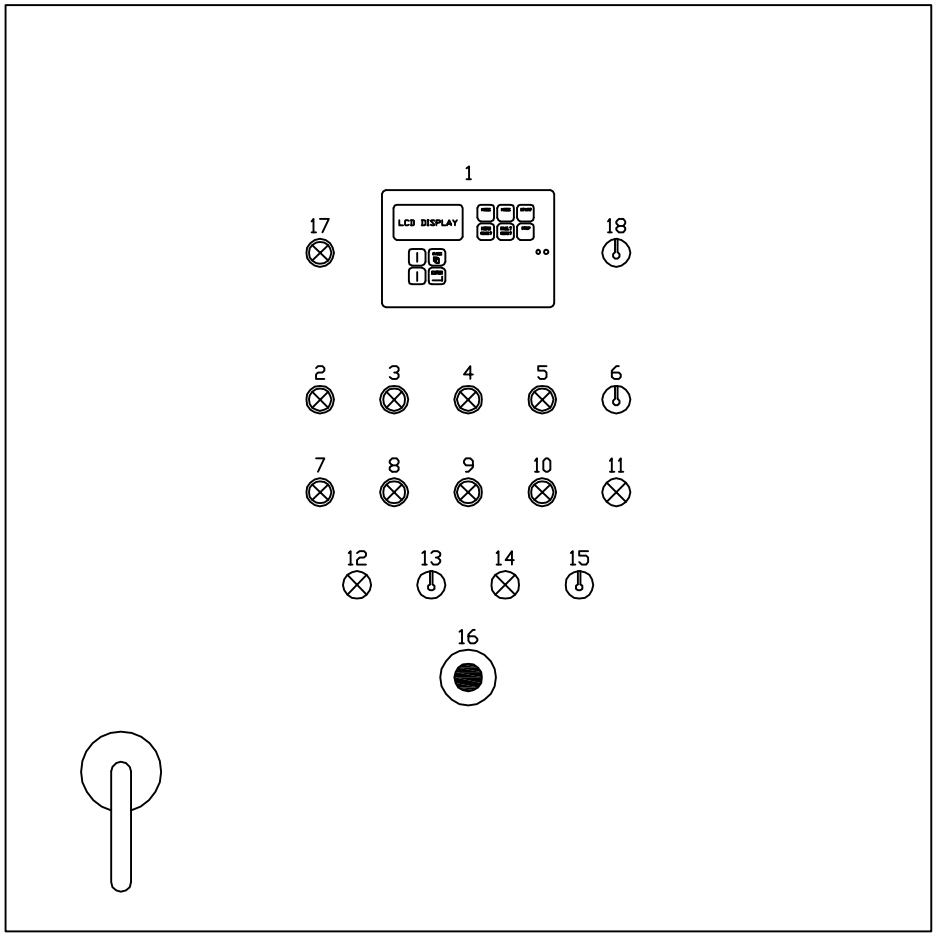

KEY	COMPONENT	TAG
1	POWERSCREEN MCU100 CONTROL UNIT	A1
2	PRE-START ILLUMINATED PUSH BUTTON	PB2/L5
3	OIL COOLER ILLUMINATED START PUSH BUTTON	PB4/L6
4	CHIEFTAIN MAIN MOTOR 1 ILLUMINATED START PUSH BUTTON	PB6/L8
5	CHIEFTAIN MAIN MOTOR 2 ILLUMINATED START PUSH BUTTON	PB8/L10
6	3-POSITION DIESEL / OFF / ELECTRIC SWITCH	S1
7	EMERGENCY STOP ILLUMINATED RESET PUSH BUTTON	PB1/L2
8	OIL COOLER ILLUMINATED STOP PUSH BUTTON	PB3/L7
9	CHIEFTAIN MAIN MOTOR 1 ILLUMINATED STOP PUSH BUTTON	PB5/L9
10	CHIEFTAIN MAIN MOTOR 2 ILLUMINATED STOP PUSH BUTTON	PB7/L11
11	ELECTRIC MODE SELECTED INDICATOR	L1
12	TEST MODE SELECTED INDICATOR	L3
13	3-POSITION TEST / OFF / MANUAL KEY SWITCH	S2
14	MANUAL MODE SELECTED INDICATOR	L4
15	ENGINE IGNITION SWITCH	S3
16	EMERGENCY STOP BUTTON	ES0
17	DEUTZ DIAGNOSTIC BUTTON AND LAMP	PB9/L12
18	ENGINE 3-STEP SPEED SWITCH	S5

REV.	DATE	BY	DETAILS	ECO
4	02/02/10	PMK	UPDATED FOR PNP AND MPESP-1006	
3	21/04/09	SL	AS BUILT	

NOTES
NOT TO SCALE

DRAWING TITLE
ELECTRICAL SCHEMATICS

MACHINE TYPE
CH1700 DUAL POWER
C/W DEUTZ 2013 E ENGINE

THE INFORMATION HEREON IS THE PROPERTY OF TEREX CORPORATION AND/OR ITS SUBSIDIARIES. WITHOUT WRITTEN PERMISSION, ANY COPYING, TRANSMITTAL TO OTHERS, AND ANY USE EXCEPT THAT FOR WHICH IT IS LOANED, IS PROHIBITED.

POWERSCREEN INTERNATIONAL DISTRIBUTION LTD
200 CHARLEMONT ROAD, DUNGANNON,
CO TYRONE, N. IRELAND
TEL: 02887 747741 FAX: 02887 746569

ECO

POWERSCREEN ELECTRICAL DEPARTMENT

SHEET 2 OF 18

PRO-1236

REV 0

A3

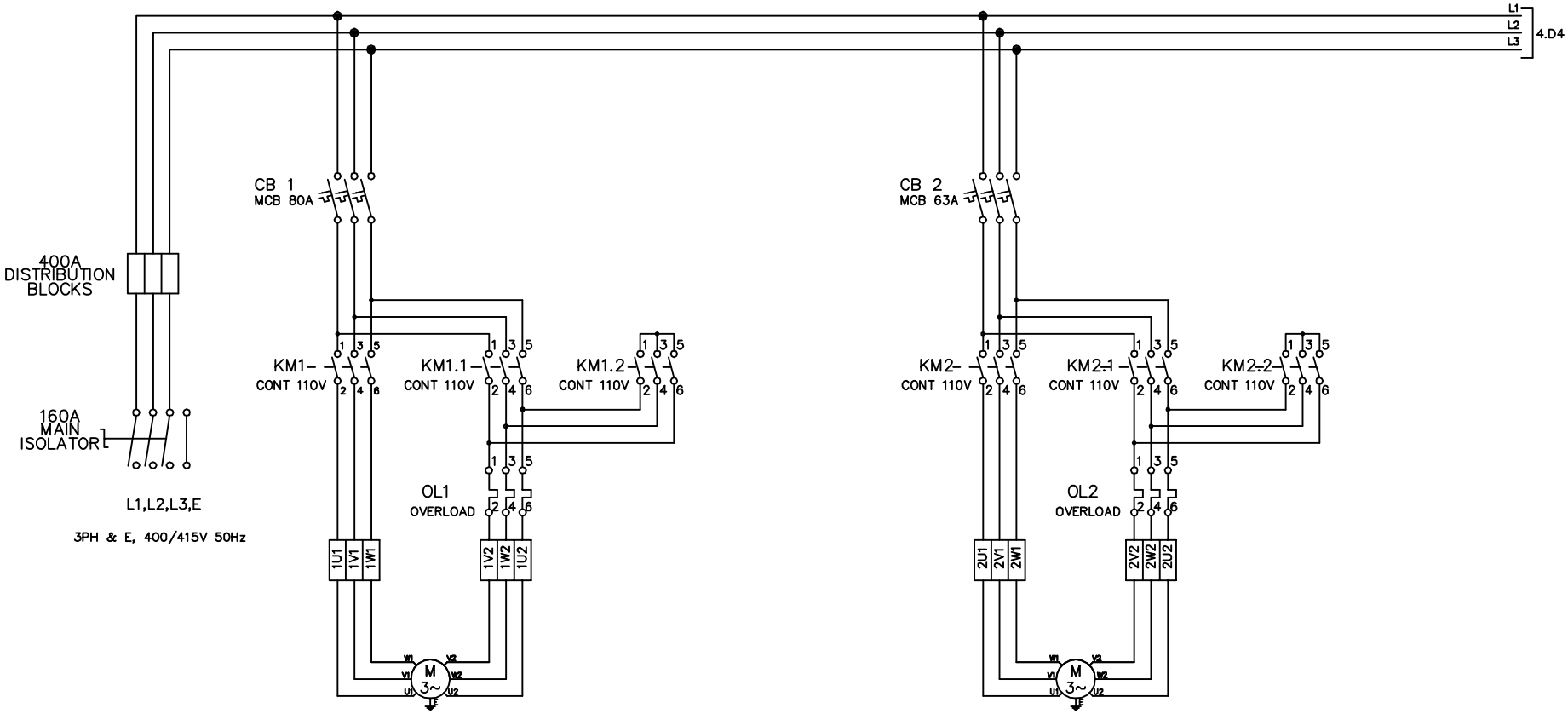

REV.	DATE	BY	DETAILS	ECO
4	02/02/10	PMK	UPDATED FOR PNP AND MPESP-1006	
3	21/04/09	SL	AS BUILT	

NOTES: NOT TO SCALE

DRAWING TITLE: ELECTRICAL SCHEMATICS

MACHINE TYPE: CH1700 DUAL POWER C/W DEUTZ 2013 E ENGINE

THE INFORMATION HEREON IS THE PROPERTY OF TEREX CORPORATION AND/OR ITS SUBSIDIARIES. WITHOUT WRITTEN PERMISSION, ANY COPYING, TRANSMITTAL TO OTHERS, AND ANY USE EXCEPT THAT FOR WHICH IT IS LOANED, IS PROHIBITED.

POWERSCREEN INTERNATIONAL DISTRIBUTION LTD
209 COOLDUAN ROAD, DUNGANNON,
CO. TYRONE, N. IRELAND
TEL: 02887 767281 FAX: 02887 745569

ECO

POWERSCREEN ELECTRICAL DEPARTMENT

SHEET 3 OF 18

PRD-1236 | REV 0 | A3

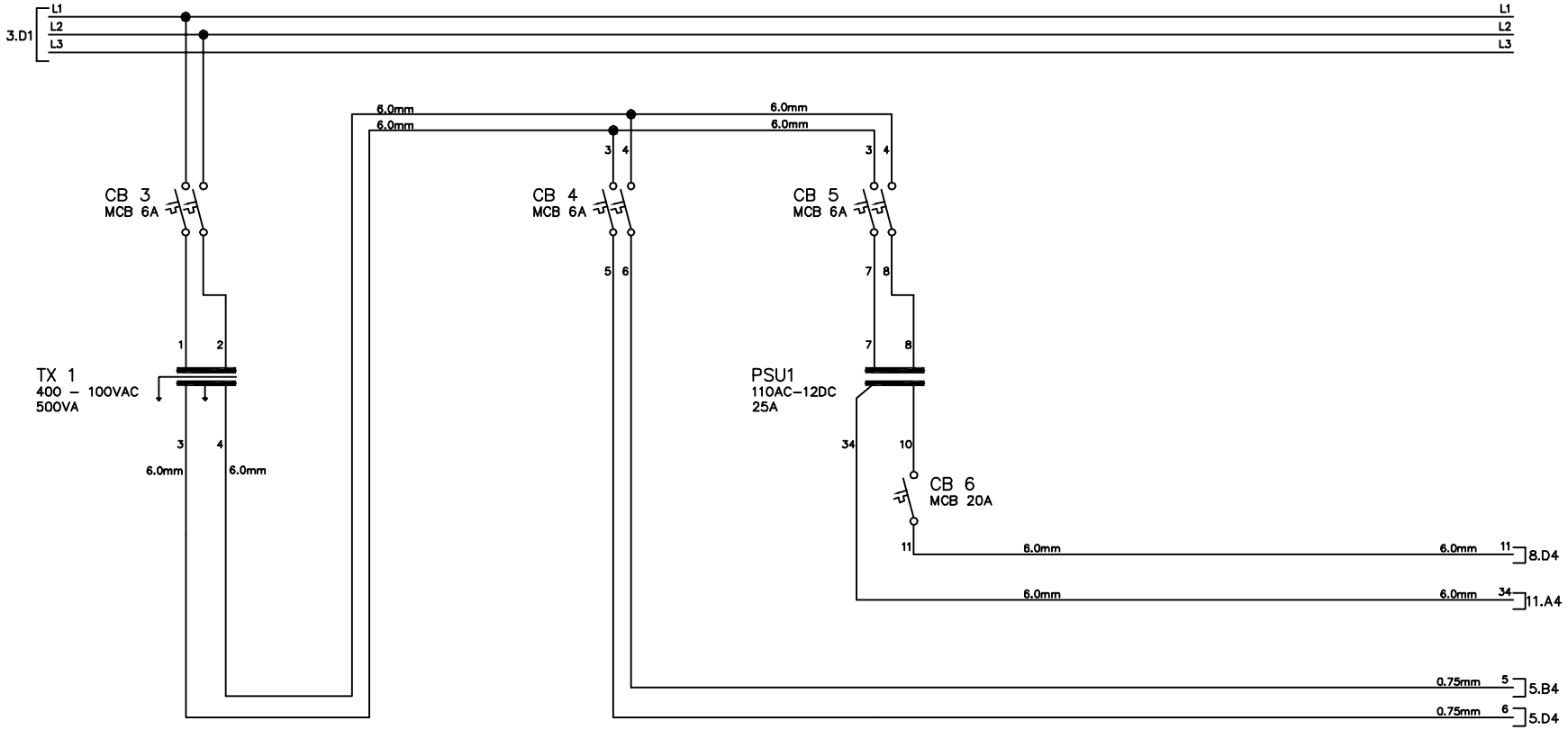

REV.	DATE	BY	DETAILS	ECO
4	02/02/10	PMK	UPDATED FOR PNP AND MPESP-1006	
3	21/04/09	SL	AS BUILT	

NOTES
NOT TO SCALE

DRAWING TITLE
ELECTRICAL SCHEMATICS

MACHINE TYPE
CH1700 DUAL POWER
C/W DEUTZ 2013 E ENGINE

THE INFORMATION HEREON IS THE PROPERTY OF TEREX CORPORATION AND/OR ITS SUBSIDIARIES. WITHOUT WRITTEN PERMISSION, ANY COPYING, TRANSMITTAL TO OTHERS, AND ANY USE EXCEPT THAT FOR WHICH IT IS LOANED, IS PROHIBITED.

POWERSCREEN INTERNATIONAL DISTRIBUTION LTD
20 COOLDUAN ROAD, DUNGANNON,
CO. TYRONE, N. IRELAND
TEL: 02887 747211 FAX: 02887 745569

ECO

POWERSCREEN ELECTRICAL DEPARTMENT

SHEET 4 OF 18

PRD-1236

REV 0

A3

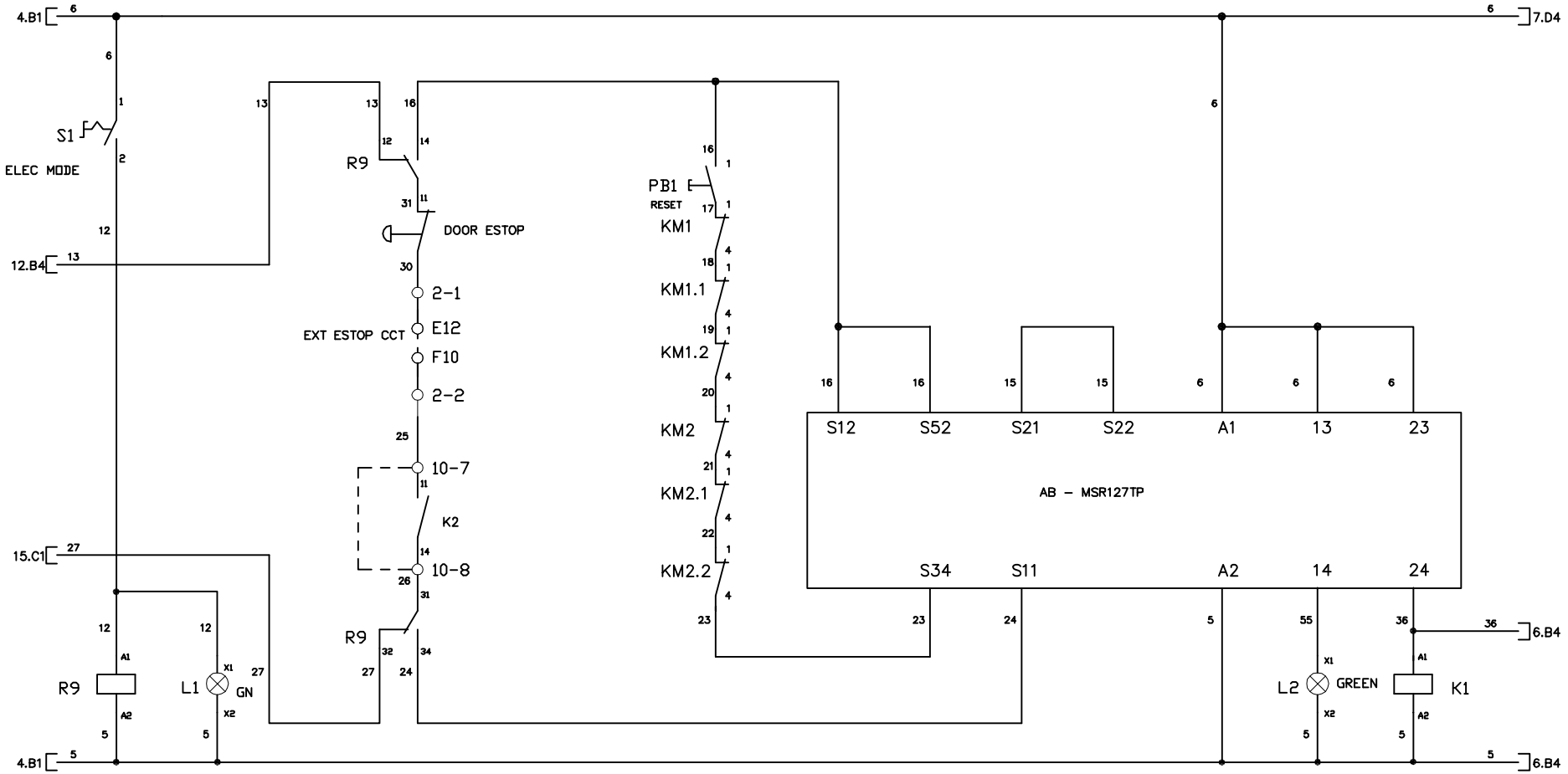

REV.	DATE	BY	DETAILS	ECO
4	02/02/10	PMK	UPDATED FOR PNP AND MPESP-1006	
3	21/04/09	SL	AS BUILT	

NOTES: NOT TO SCALE

DRAWING TITLE: ELECTRICAL SCHEMATICS

MACHINE TYPE: CH1700 DUAL POWER C/W DEUTZ 2013 E ENGINE

THE INFORMATION HEREON IS THE PROPERTY OF TEREX CORPORATION AND/OR ITS SUBSIDIARIES. WITHOUT WRITTEN PERMISSION, ANY COPYING, TRANSMITTAL TO OTHERS, AND ANY USE EXCEPT THAT FOR WHICH IT IS LOANED, IS PROHIBITED.

POWERSCREEN INTERNATIONAL DISTRIBUTION LTD
120 CHAILAND ROAD, DUNGANNON,
CO. TYRONE, N. IRELAND
TEL: 02887 767171 FAX: 02887 745569

ECO

POWERSCREEN ELECTRICAL DEPARTMENT

SHEET 5 OF 18

PRD-1236

REV 0

A3

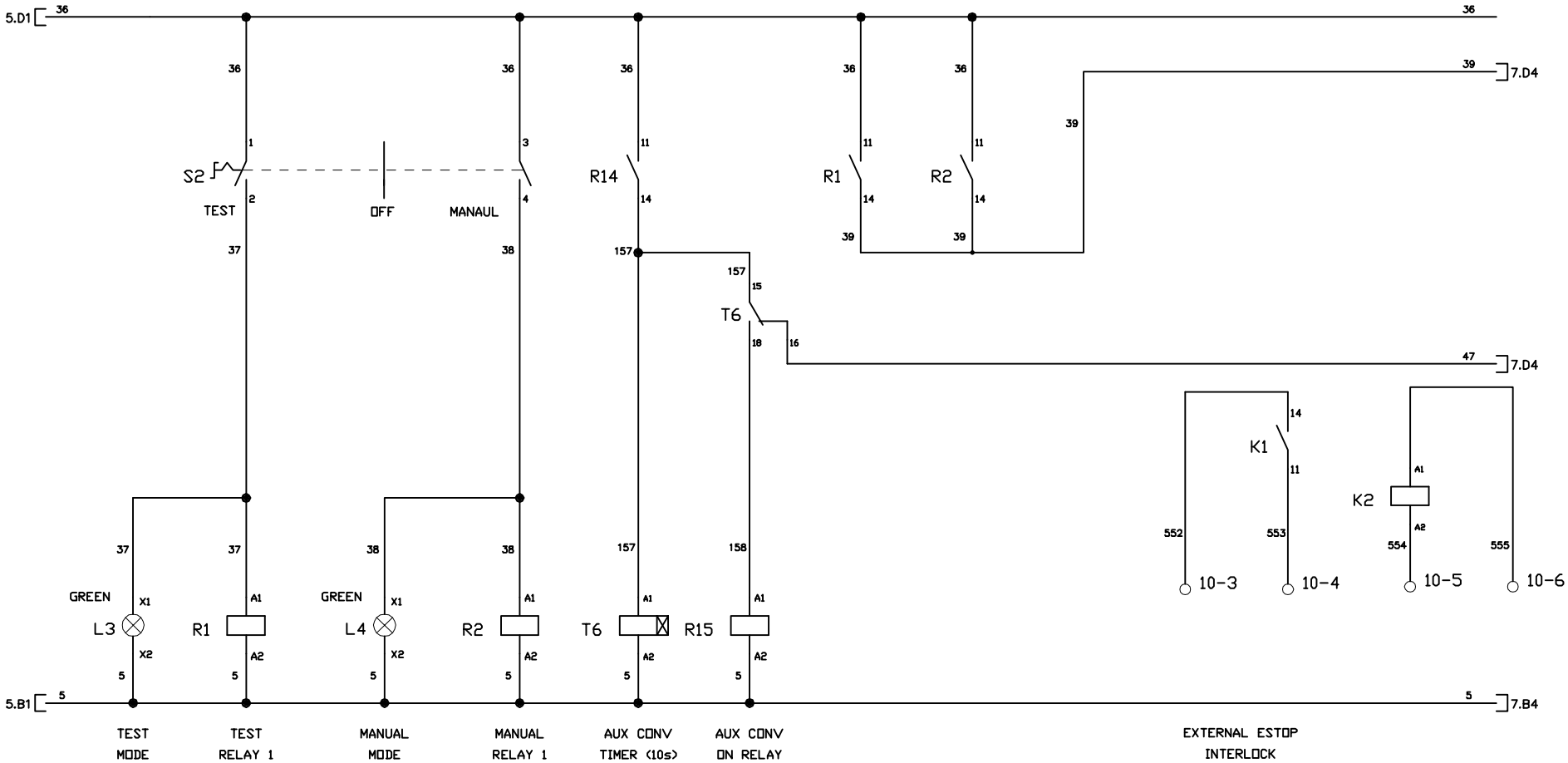

REV.	DATE	BY	DETAILS	ECO
4	02/02/10	PMK	UPDATED FOR PNP AND MPESP-1006	
3	21/04/09	SL	AS BUILT	

NOTES: NOT TO SCALE

DRAWING TITLE: ELECTRICAL SCHEMATICS

MACHINE TYPE: CH1700 DUAL POWER C/W DEUTZ 2013 E ENGINE

THE INFORMATION HEREON IS THE PROPERTY OF TEREX CORPORATION AND/OR ITS SUBSIDIARIES. WITHOUT WRITTEN PERMISSION, ANY COPYING, TRANSMITTAL TO OTHERS, AND ANY USE EXCEPT THAT FOR WHICH IT IS LOANED, IS PROHIBITED.

POWERSCREEN INTERNATIONAL DISTRIBUTION LTD
120 CHAILAND ROAD, DUNGANNON,
CO. TYRONE, N. IRELAND
TEL: 02887 740741 FAX: 02887 740569

ECO | POWERSCREEN ELECTRICAL DEPARTMENT | SHEET 6 OF 18

PRD-1236 | REV 0 | A3

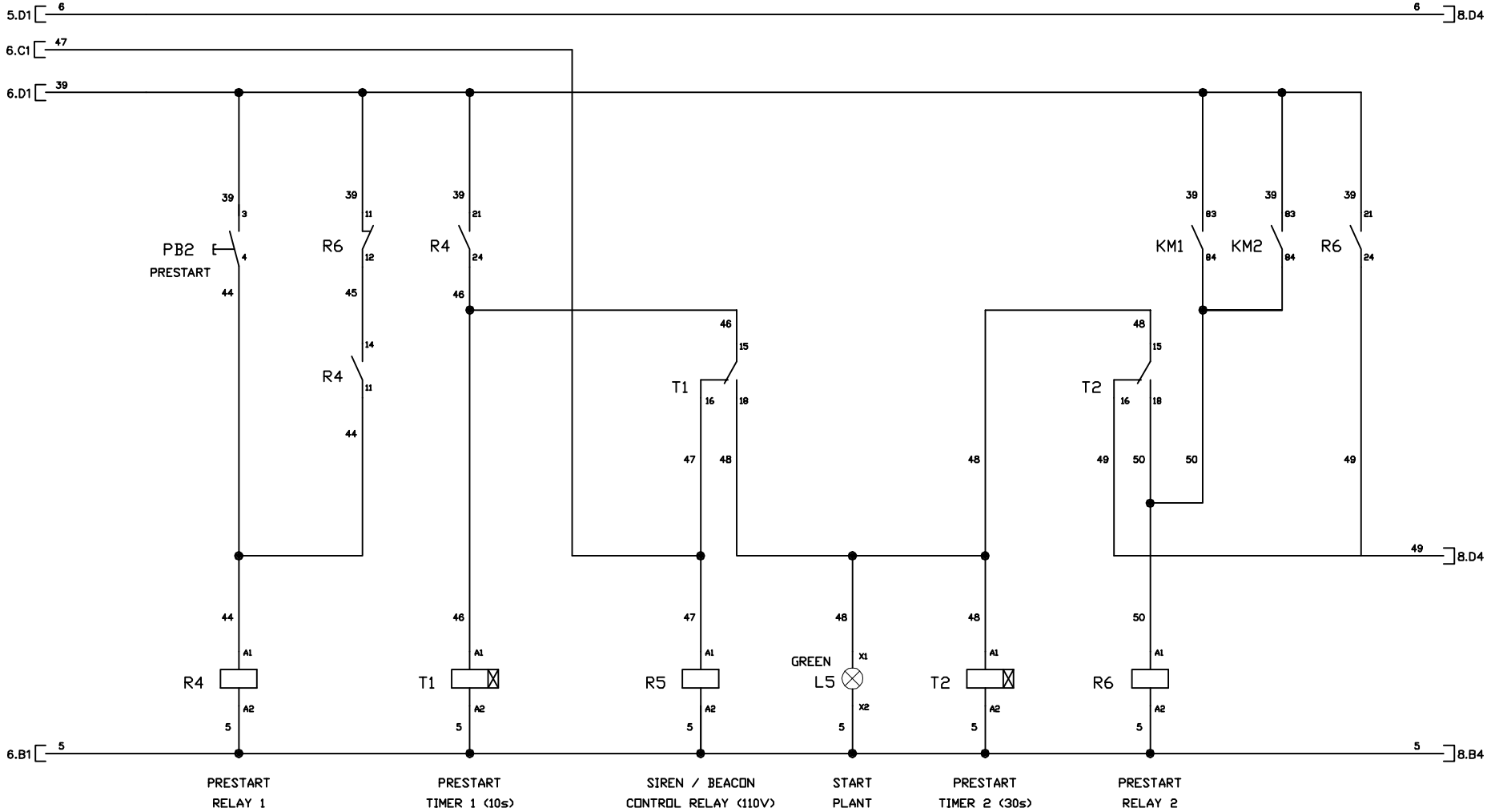

REV.	DATE	BY	DETAILS	ECO
4	02/02/10	PMK	UPDATED FOR PNP AND MPESP-1006	
3	21/04/09	SL	AS BUILT	

NOTES: NOT TO SCALE

DRAWING TITLE: ELECTRICAL SCHEMATICS

MACHINE TYPE: CH1700 DUAL POWER C/W DEUTZ 2013 E ENGINE

THE INFORMATION HEREON IS THE PROPERTY OF TEREX CORPORATION AND/OR ITS SUBSIDIARIES. WITHOUT WRITTEN PERMISSION, ANY COPYING, TRANSMITTAL TO OTHERS, AND ANY USE EXCEPT THAT FOR WHICH IT IS LOANED, IS PROHIBITED.

POWERSCREEN INTERNATIONAL DISTRIBUTION LTD
120 CHAILEARD ROAD, DUNGANNON,
CO. TYRONE, N. IRELAND
TEL: 02887 767281 FAX: 02887 745569

ECO | POWERSCREEN ELECTRICAL DEPARTMENT | SHEET 7 OF 18

PRD-1236 | REV 0 | A3

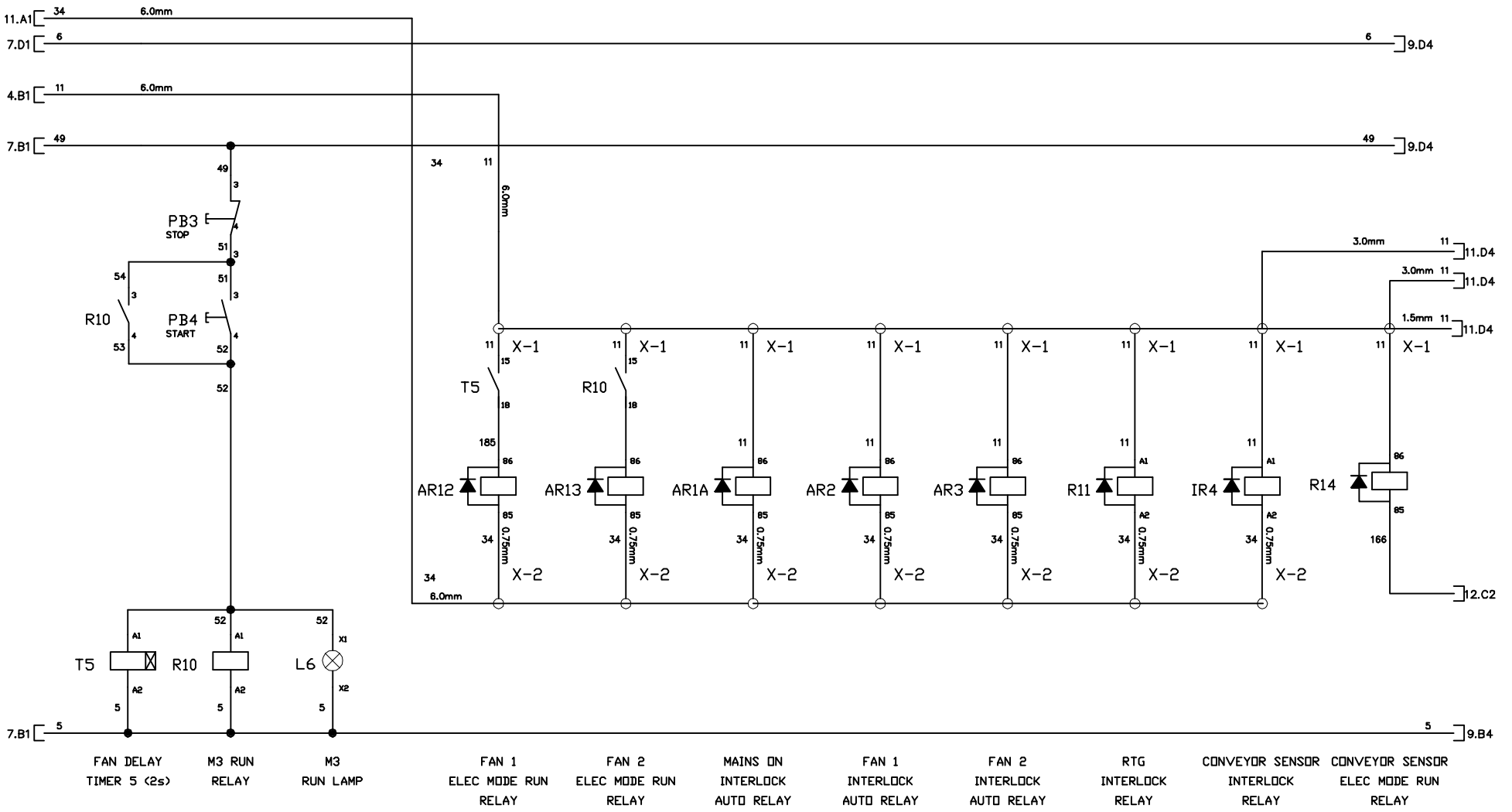

REV.	DATE	BY	DETAILS	ECO
4	02/02/10	PMK	UPDATED FOR PNP AND MPESP-1006	
3	21/04/09	SL	AS BUILT	

NOTES: NOT TO SCALE

DRAWING TITLE: ELECTRICAL SCHEMATICS

MACHINE TYPE: CH1700 DUAL POWER C/W DEUTZ 2013 E ENGINE

THE INFORMATION HEREON IS THE PROPERTY OF TEREX CORPORATION AND/OR ITS SUBSIDIARIES. WITHOUT WRITTEN PERMISSION, ANY COPYING, TRANSMITTAL TO OTHERS, AND ANY USE EXCEPT THAT FOR WHICH IT IS LOANED, IS PROHIBITED.

POWERSCREEN INTERNATIONAL DISTRIBUTION LTD
20 CHILDLAND ROAD, DUNGANNON,
CO. TYRONE, N. IRELAND
TEL: 02887 767611 FAX: 02887 745569

ECO

POWERSCREEN ELECTRICAL DEPARTMENT

SHEET 8 OF 18

PRD-1236 | REV 0 | A3

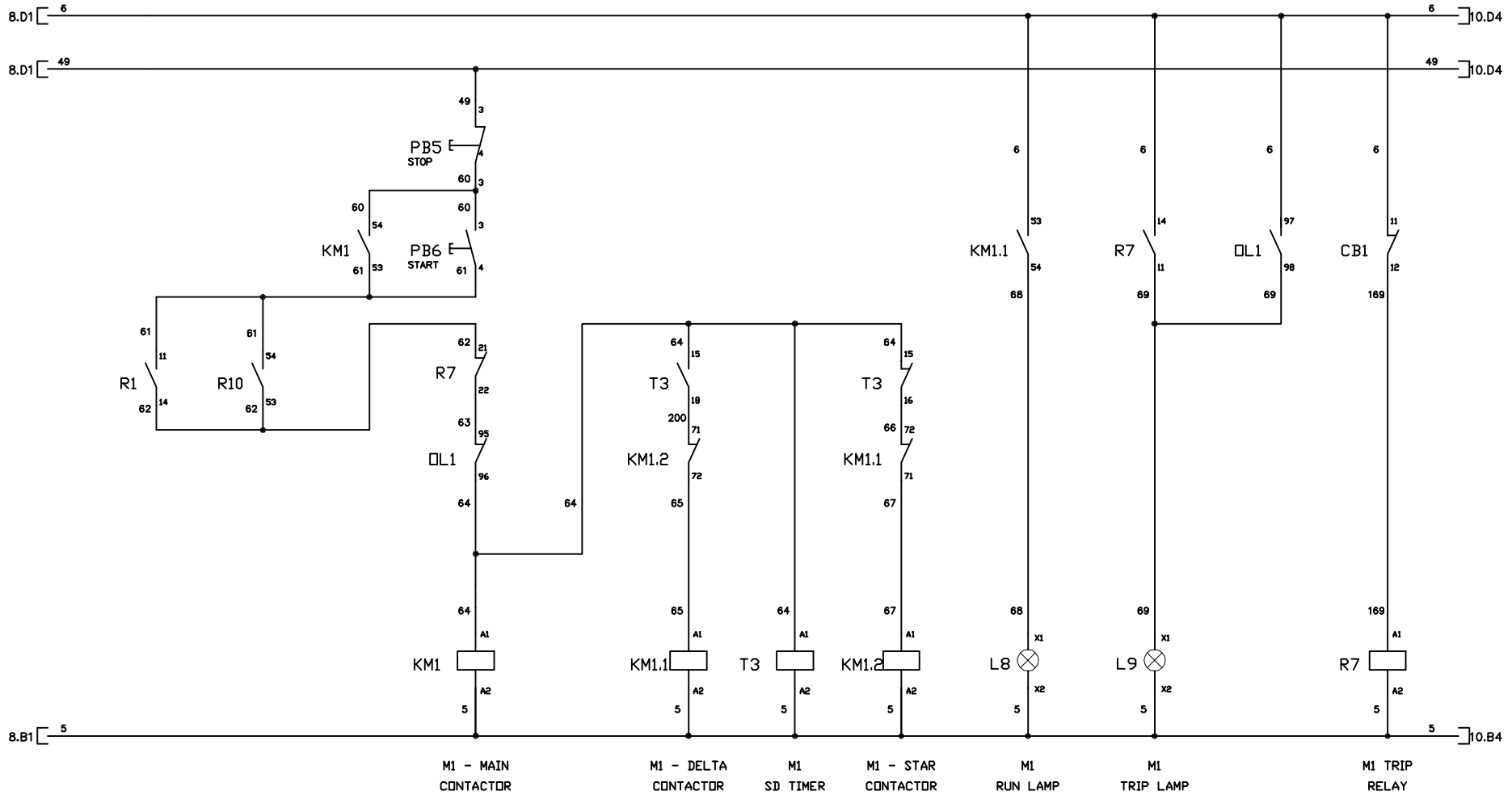

REV.	DATE	BY	DETAILS	ECO
4	02/02/10	PMK	UPDATED FOR PNP AND MPESP-1006	
3	21/04/09	SL	AS BUILT	

NOTES: NOT TO SCALE

DRAWING TITLE: ELECTRICAL SCHEMATICS

MACHINE TYPE: CH1700 DUAL POWER C/W DEUTZ 2013 E ENGINE

THE INFORMATION HEREON IS THE PROPERTY OF TEREX CORPORATION AND/OR ITS SUBSIDIARIES. WITHOUT WRITTEN PERMISSION, ANY COPYING, TRANSMITTAL TO OTHERS, AND ANY USE EXCEPT THAT FOR WHICH IT IS LOANED, IS PROHIBITED.

POWERSCREEN INTERNATIONAL DISTRIBUTION LTD
120 CHAILAND ROAD, DUNGANNON,
CO. TYRONE, N. IRELAND
TEL: 02887 767201 FAX: 02887 745569

ECO | POWERSCREEN ELECTRICAL DEPARTMENT | SHEET 9 OF 18

PRD-1236 | REV 0 | A3

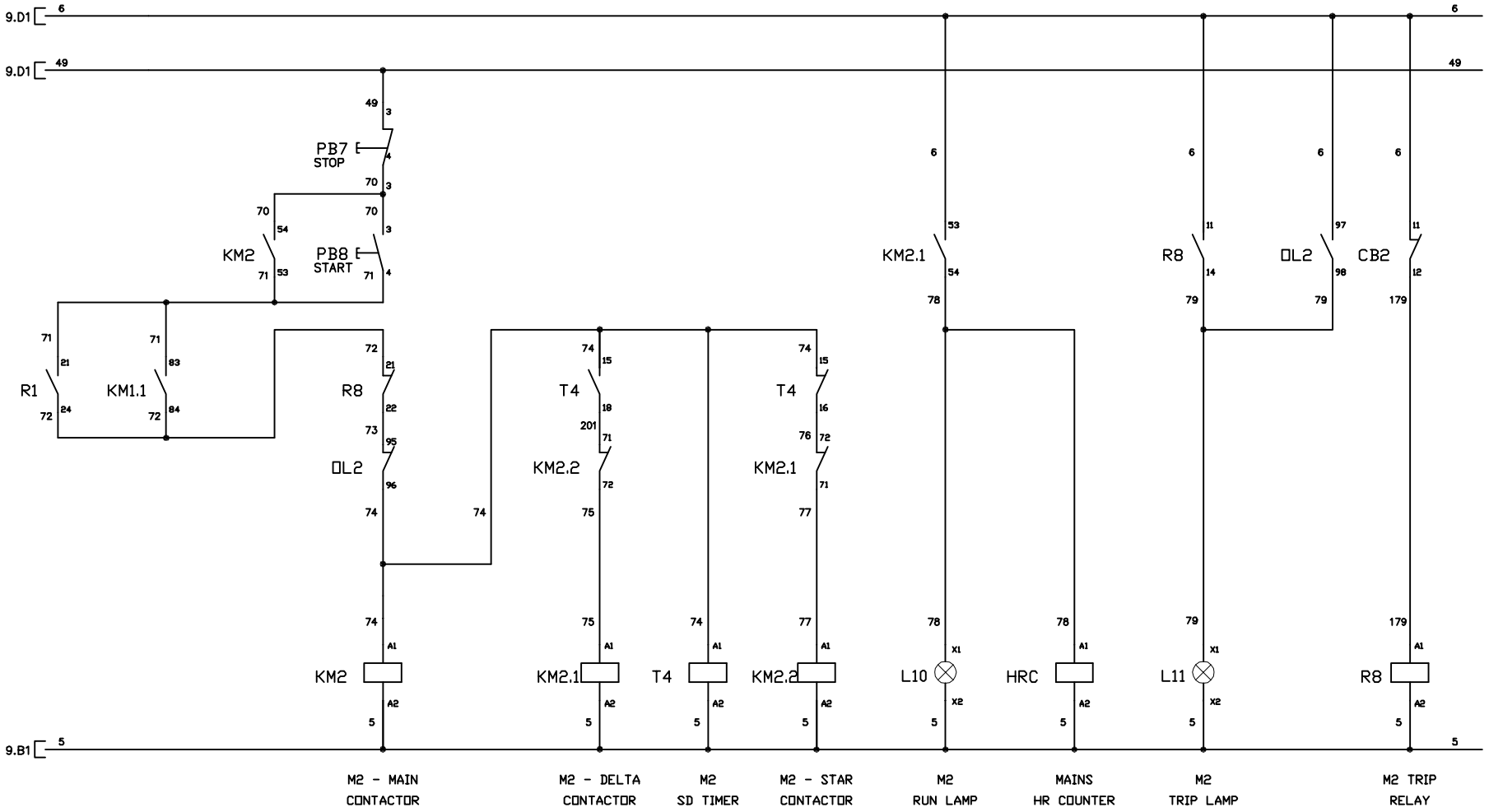

REV.	DATE	BY	DETAILS	ECO
4	02/02/10	PMK	UPDATED FOR PNP AND MPESP-1006	
3	21/04/09	SL	AS BUILT	

NOTES: NOT TO SCALE

DRAWING TITLE: ELECTRICAL SCHEMATICS

MACHINE TYPE: CH1700 DUAL POWER C/W DEUTZ 2013 E ENGINE

THE INFORMATION HEREON IS THE PROPERTY OF TEREX CORPORATION AND/OR ITS SUBSIDIARIES. WITHOUT WRITTEN PERMISSION, ANY COPYING, TRANSMITTAL TO OTHERS, AND ANY USE EXCEPT THAT FOR WHICH IT IS LOANED, IS PROHIBITED.

POWERSCREEN INTERNATIONAL DISTRIBUTION LTD
20 CHILDLAND ROAD, DUNGANNON,
CO. TYRONE, N. IRELAND
TEL: 02887 740741 FAX: 02887 745569

ECO

POWERSCREEN ELECTRICAL DEPARTMENT

SHEET 10 OF 18

PRD-1236

REV 0

A3

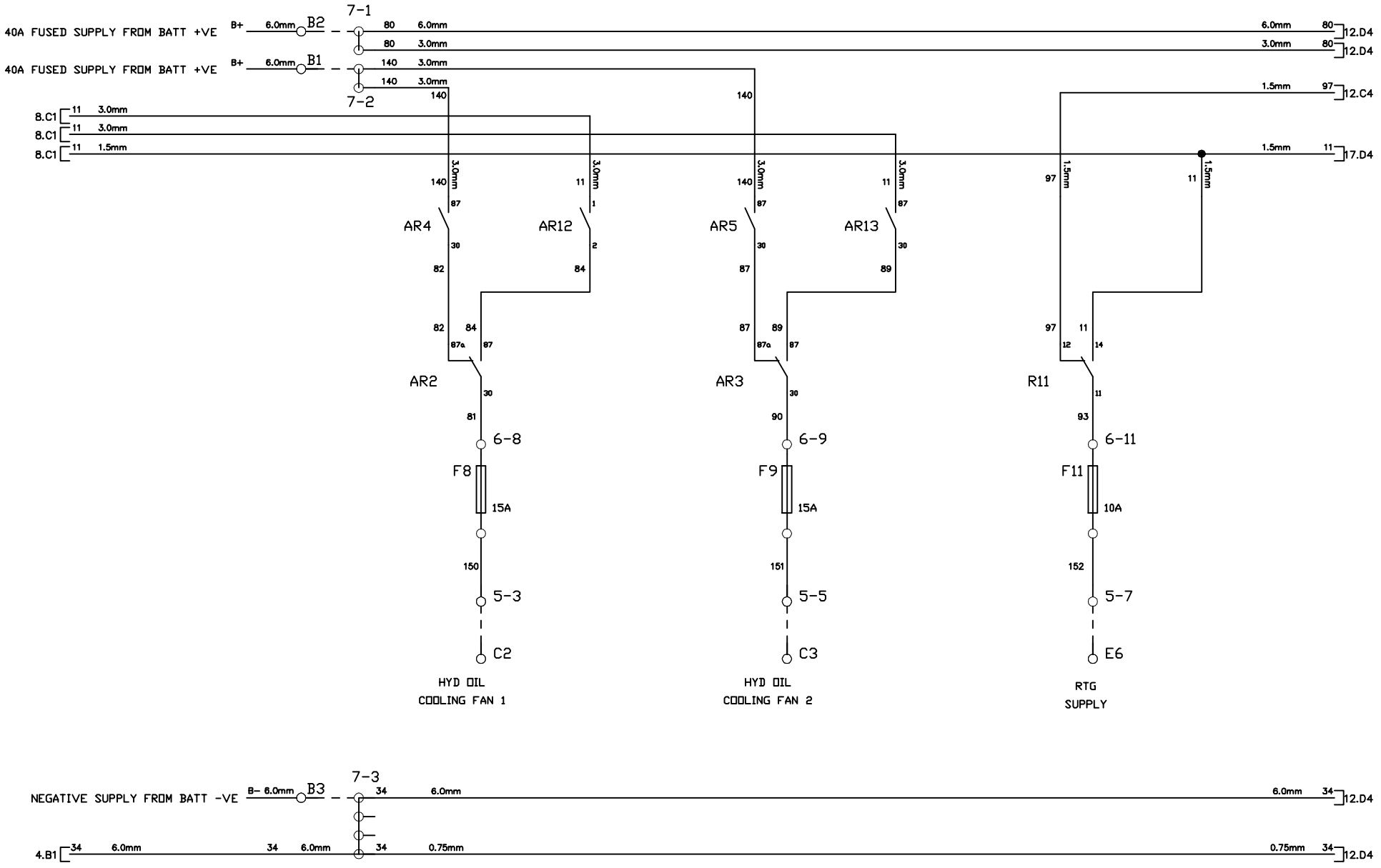

REV.	DATE	BY	DETAILS	ECO
4	02/02/10	PMK	UPDATED FOR PNP AND MPESP-1006	
3	21/04/09	SL	AS BUILT	

NOTES
NOT TO SCALE

DRAWING TITLE
ELECTRICAL SCHEMATICS

MACHINE TYPE
CH1700 DUAL POWER
C/W DEUTZ 2013 E ENGINE

THE INFORMATION HEREON IS THE PROPERTY OF TEREX CORPORATION AND/OR ITS SUBSIDIARIES. WITHOUT WRITTEN PERMISSION, ANY COPYING, TRANSMITTAL TO OTHERS, AND ANY USE EXCEPT THAT FOR WHICH IT IS LOANED, IS PROHIBITED.

POWERSCREEN

ECO

POWERSCREEN ELECTRICAL DEPARTMENT

SHEET 11 OF 18

PRD-1236

REV 0

A3

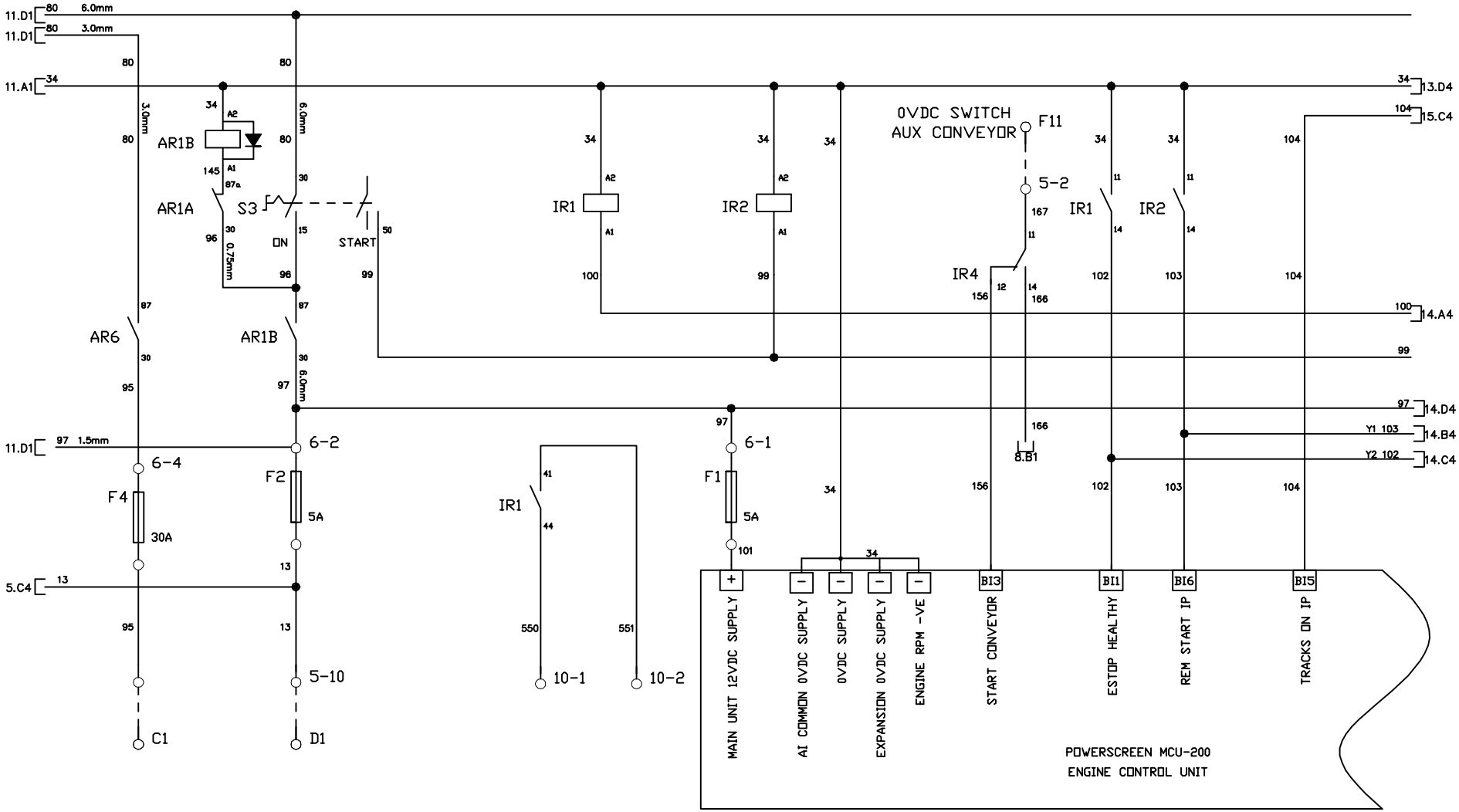

REV.	DATE	BY	DETAILS	ECO
4	02/02/10	PMK	UPDATED FOR PNP AND MPESP-1006	
3	21/04/09	SL	AS BUILT	

NOTES: NOT TO SCALE

DRAWING TITLE: ELECTRICAL SCHEMATICS

MACHINE TYPE: CH1700 DUAL POWER C/W DEUTZ 2013 E ENGINE

THE INFORMATION HEREON IS THE PROPERTY OF TEREX CORPORATION AND/OR ITS SUBSIDIARIES. WITHOUT WRITTEN PERMISSION, ANY COPYING, TRANSMITTAL TO OTHERS, AND ANY USE EXCEPT THAT FOR WHICH IT IS LOANED, IS PROHIBITED.

POWERSCREEN INTERNATIONAL DISTRIBUTION LTD
20 CAVELAND ROAD, DUNGANNON,
CO. TYRONE, N. IRELAND
TEL: 02887 742121 FAX: 02887 745509

ECO

POWERSCREEN ELECTRICAL DEPARTMENT

SHEET 12 OF 18

PRD-1236 | REV 0 | A3

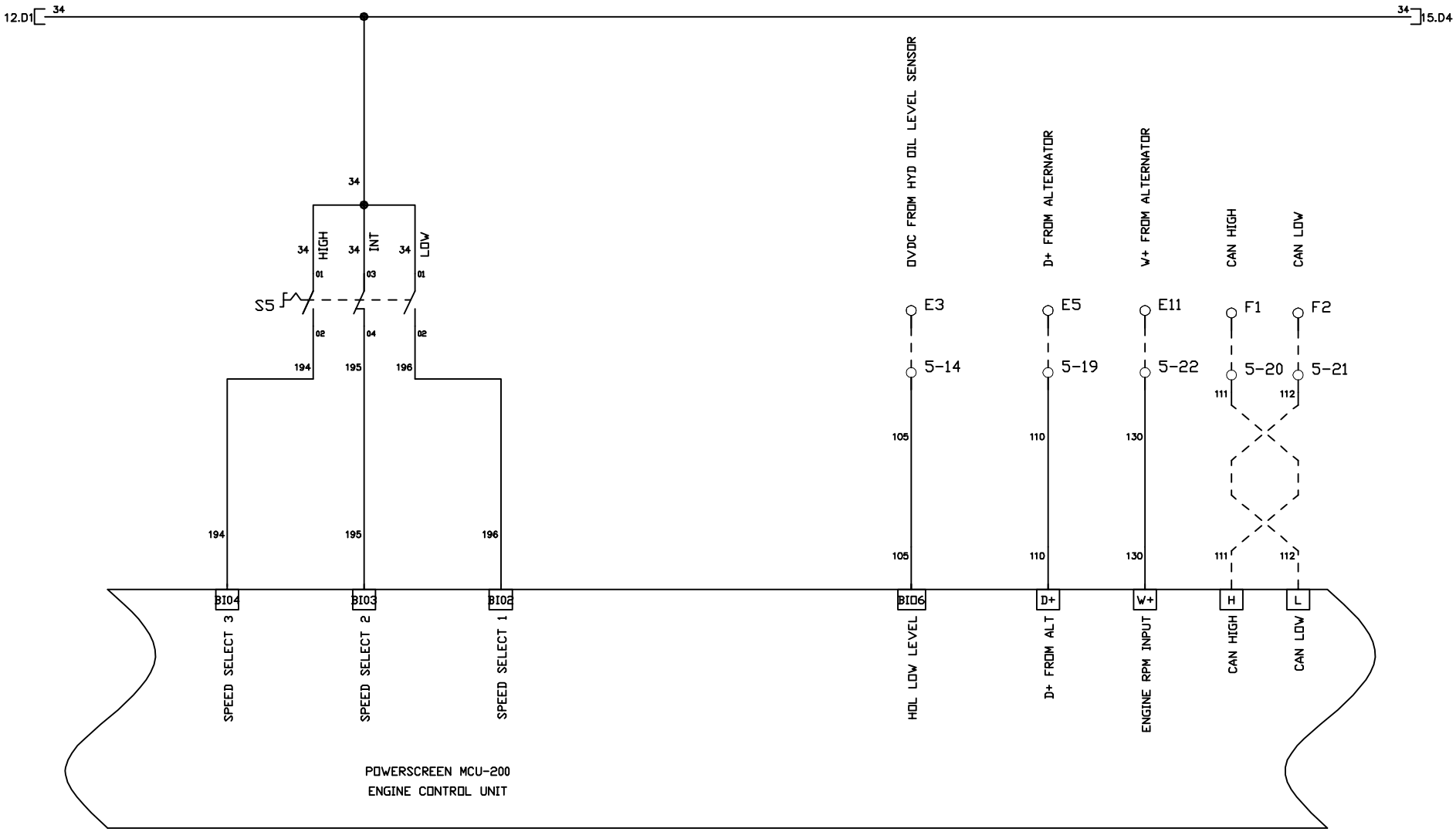

REV.	DATE	BY	DETAILS	ECO
4	02/02/10	PMK	UPDATED FOR PNP AND MPESP-1006	
3	21/04/09	SL	AS BUILT	

NOTES
NOT TO SCALE

DRAWING TITLE
ELECTRICAL SCHEMATICS

MACHINE TYPE
CH1700 DUAL POWER
C/W DEUTZ 2013 E ENGINE

THE INFORMATION HEREON IS THE PROPERTY OF TEREX CORPORATION AND/OR ITS SUBSIDIARIES. WITHOUT WRITTEN PERMISSION, ANY COPYING, TRANSMITTAL TO OTHERS, AND ANY USE EXCEPT THAT FOR WHICH IT IS LOANED, IS PROHIBITED.

POWERSCREEN INTERNATIONAL DISTRIBUTION LTD
20 CAULDUAFF ROAD, DUNGANNON,
CO TYRONE, N. IRELAND
TEL: 02887 747611 FAX: 02887 745569

ECO

POWERSCREEN ELECTRICAL DEPARTMENT

SHEET 13 OF 18

PRD-1236

REV 0

A3

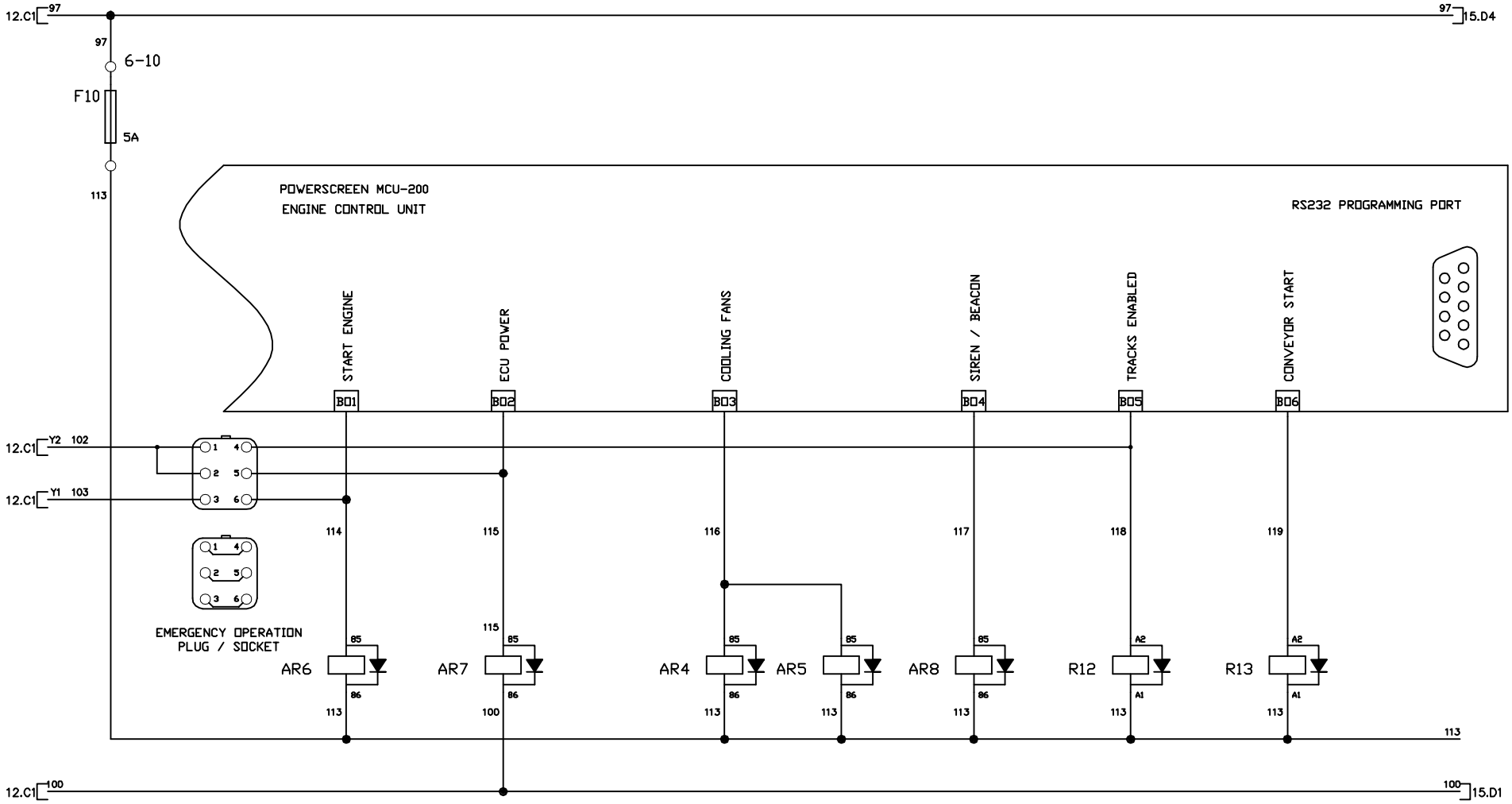

REV.	DATE	BY	DETAILS	ECO
4	02/02/10	PMK	UPDATED FOR PNP AND MPESP-1006	
3	21/04/09	SL	AS BUILT	

NOTES
NOT TO SCALE

DRAWING TITLE
ELECTRICAL SCHEMATICS

MACHINE TYPE
CH1700 DUAL POWER
C/W DEUTZ 2013 E ENGINE

THE INFORMATION HEREON IS THE PROPERTY OF TEREX CORPORATION AND/OR ITS SUBSIDIARIES. WITHOUT WRITTEN PERMISSION, ANY COPYING, TRANSMITTAL TO OTHERS, AND ANY USE EXCEPT THAT FOR WHICH IT IS LOANED, IS PROHIBITED.

POWERSCREEN INTERNATIONAL DISTRIBUTION LTD
20 COALISLAND ROAD, DUNGANNON,
CO. TYRONE, N. IRELAND
TEL: 02887 740741 FAX: 02887 745569

ECO
POWERSCREEN ELECTRICAL DEPARTMENT
SHEET 14 OF 18

PRD-1236
REV 0
A3

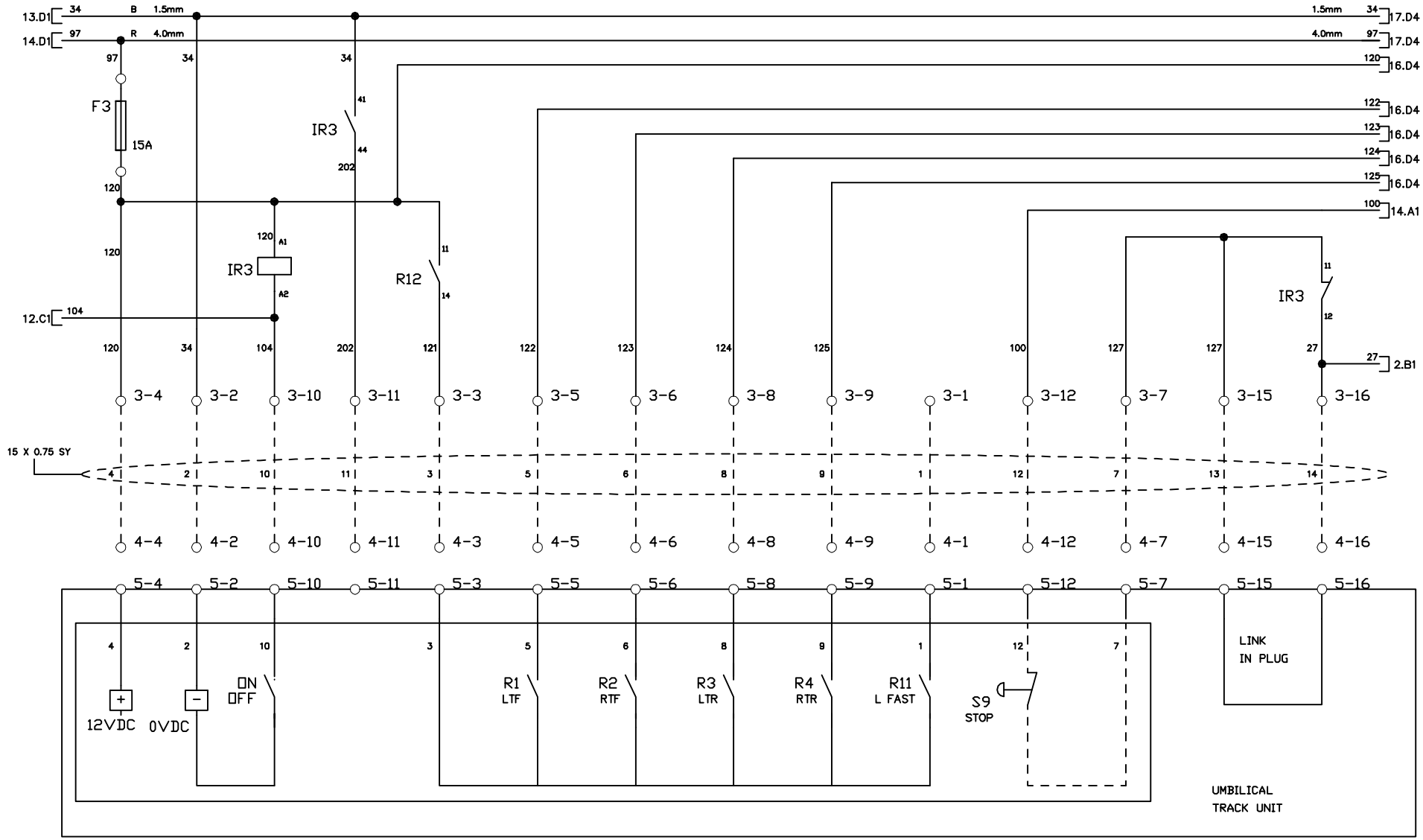

REV.	DATE	BY	DETAILS	ECO
4	02/02/10	PMK	UPDATED FOR PNP AND MPESP-1006	
3	21/04/09	SL	AS BUILT	

NOTES: NOT TO SCALE

DRAWING TITLE: ELECTRICAL SCHEMATICS

MACHINE TYPE: CH1700 DUAL POWER C/W DEUTZ 2013 E ENGINE

THE INFORMATION HEREON IS THE PROPERTY OF TEREX CORPORATION AND/OR ITS SUBSIDIARIES. WITHOUT WRITTEN PERMISSION, ANY COPYING, TRANSMITTAL TO OTHERS, AND ANY USE EXCEPT THAT FOR WHICH IT IS LOANED, IS PROHIBITED.

POWERSCREEN INTERNATIONAL DISTRIBUTION LTD
209 CHAILEAND ROAD, DUNGANNON,
CO. TYRONE, N. IRELAND
TEL: 02887 767201 FAX: 02887 745569

ECO

POWERSCREEN ELECTRICAL DEPARTMENT

SHEET 15A OF 18

PRD-1236 | REV 0 | A3

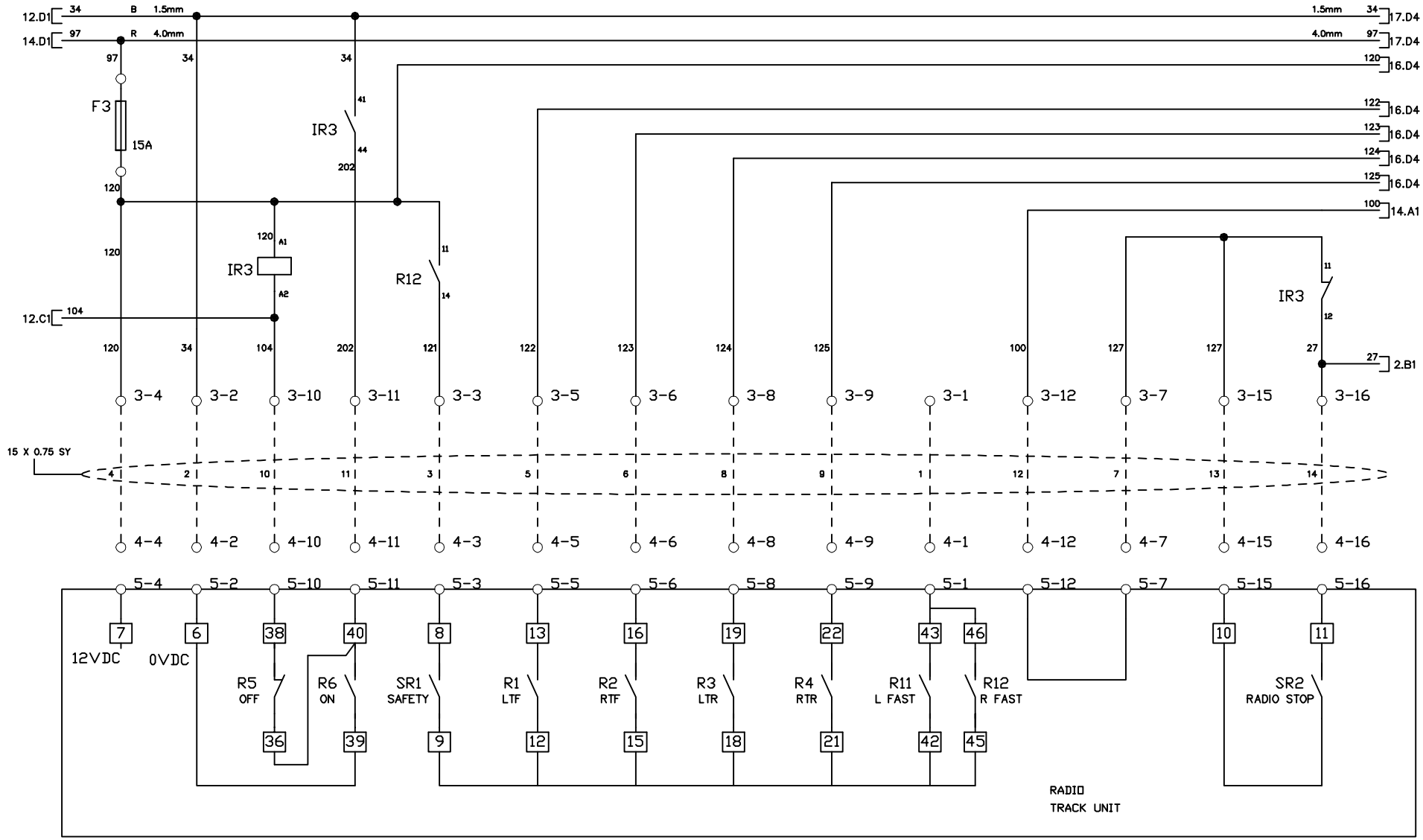

REV.	DATE	BY	DETAILS	ECO
4	02/02/10	PMK	UPDATED FOR PNP AND MPESP-1006	
3	21/04/09	SL	AS BUILT	

NOTES: NOT TO SCALE

DRAWING TITLE: ELECTRICAL SCHEMATICS

MACHINE TYPE: CH1700 DUAL POWER C/W DEUTZ 2013 E ENGINE

THE INFORMATION HEREIN IS THE PROPERTY OF TEREX CORPORATION AND/OR ITS SUBSIDIARIES. WITHOUT WRITTEN PERMISSION, ANY COPYING, TRANSMITTAL TO OTHERS, AND ANY USE EXCEPT THAT FOR WHICH IT IS LOANED, IS PROHIBITED.

POWERSCREEN

ECO | POWERSCREEN ELECTRICAL DEPARTMENT | SHEET 15B OF 18

PRD-1236 | REV 0 | A3

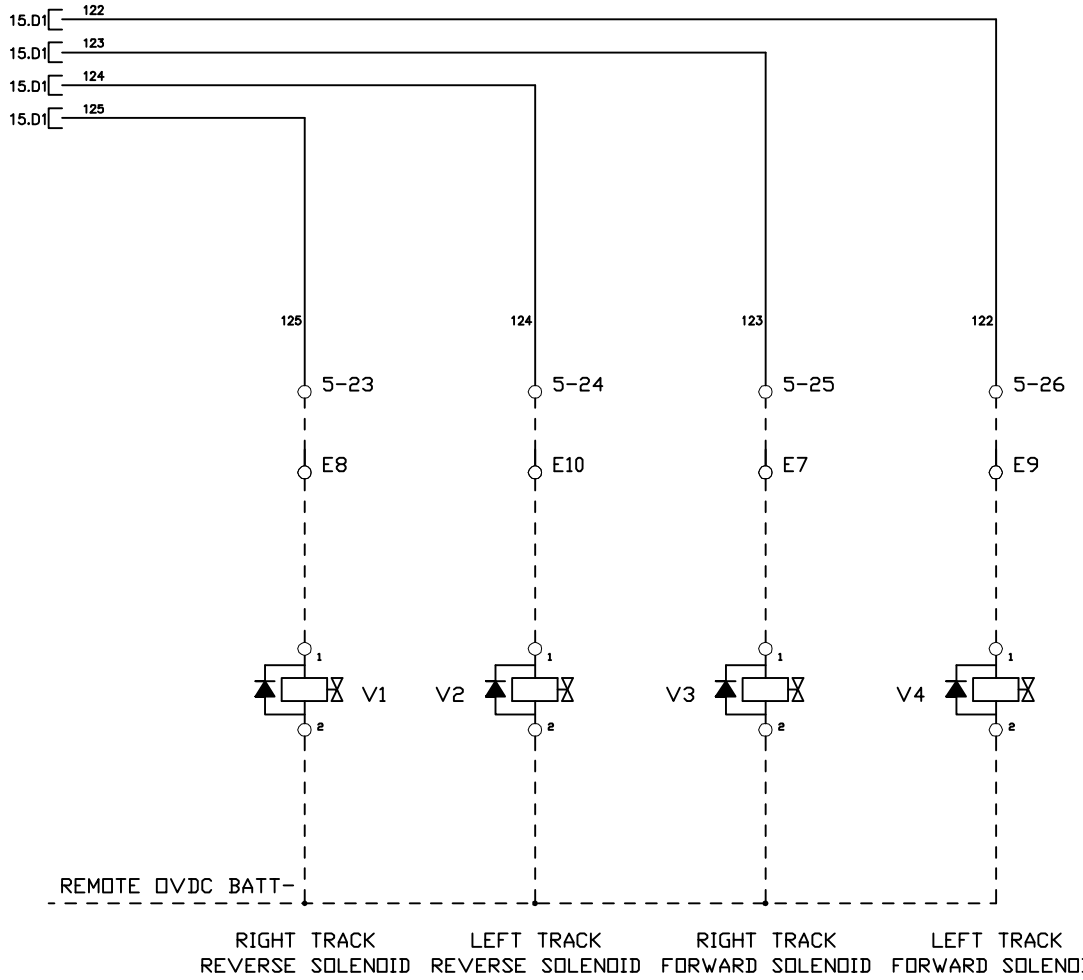

REV.	DATE	BY	DETAILS	ECO
4	02/02/10	PMK	UPDATED FOR PNP AND MPESP-1006	
3	21/04/09	SL	AS BUILT	

NOTES: NOT TO SCALE

DRAWING TITLE: ELECTRICAL SCHEMATICS

MACHINE TYPE: CH1700 DUAL POWER C/W DEUTZ 2013 E ENGINE

THE INFORMATION HEREON IS THE PROPERTY OF TEREX CORPORATION AND/OR ITS SUBSIDIARIES. WITHOUT WRITTEN PERMISSION, ANY COPYING, TRANSMITTAL TO OTHERS, AND ANY USE EXCEPT THAT FOR WHICH IT IS LOANED, IS PROHIBITED.

POWERSCREEN INTERNATIONAL DISTRIBUTION LTD
209 COOLDUAN ROAD, DUNGANNON,
CO. TYRONE, N. IRELAND
TEL: 02887 767611 FAX: 02887 745569

ECO | POWERSCREEN ELECTRICAL DEPARTMENT | SHEET 16 OF 18

PRD-1236 | REV 0 | A3

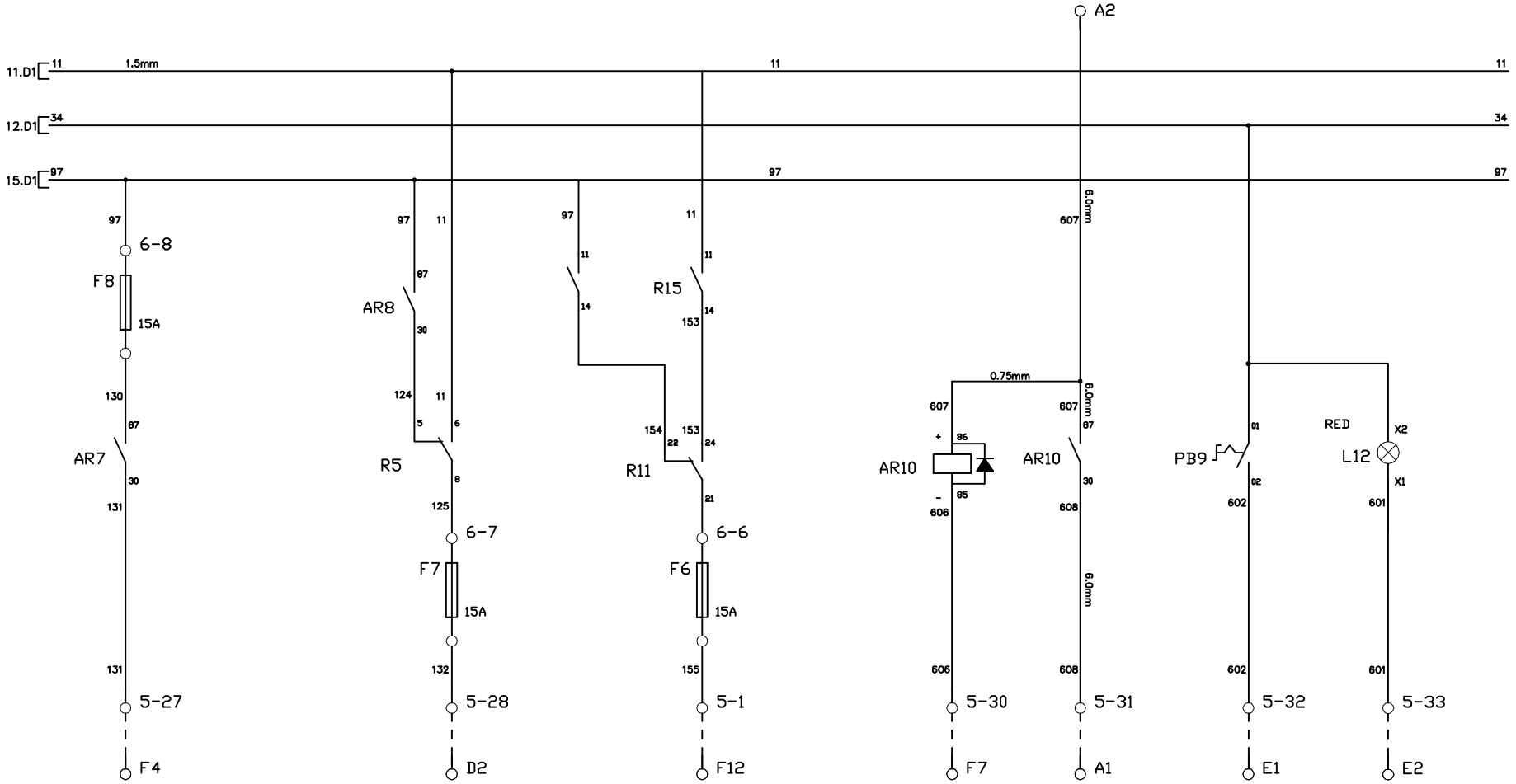

REV.	DATE	BY	DETAILS	ECO
4	02/02/10	PMK	UPDATED FOR PNP AND MPESP-1006	
3	21/04/09	SL	AS BUILT	

NOTES: NOT TO SCALE

DRAWING TITLE: ELECTRICAL SCHEMATICS

MACHINE TYPE: CH1700 DUAL POWER C/W DEUTZ 2013 E ENGINE

THE INFORMATION HEREON IS THE PROPERTY OF TEREX CORPORATION AND/OR ITS SUBSIDIARIES. WITHOUT WRITTEN PERMISSION, ANY COPYING, TRANSMITTAL TO OTHERS, AND ANY USE EXCEPT THAT FOR WHICH IT IS LOANED, IS PROHIBITED.

POWERSCREEN INTERNATIONAL DISTRIBUTION LTD
20 CHALLAND ROAD, DUNGANNON,
CO TYRONE, N. IRELAND
TEL: 02887 742121 FAX: 02887 745569

ECO

POWERSCREEN ELECTRICAL DEPARTMENT

SHEET 17 OF 18

PRD-1236 | REV 0 | A3

AUX CONV PROXY 12V SUPPLY	5-1
AUX CONV PROXY 12V SIGNAL IN	5-2
COOLING FAN 1 12VDC	5-3
	5-4
COOLING FAN 2 12VDC	5-5
	5-6
RADIO TIPPING GRID 12VDC	5-7
	5-8
SPARE	5-9
ENGINE SENSOR SUPPLY 1	5-10
ENGINE SENSOR SUPPLY 2	5-11
ENGINE SENSOR SUPPLY 3	5-12
0VDC FROM COOLANT LEVEL SENSOR	5-13
0VDC FROM HYD OIL LEVEL SENSOR	5-14
0VDC FROM FUEL CONTAMINATION SENSOR	5-15
0VDC FROM AF RESTRICTION SWITCH	5-16
0VDC FROM ENGINE TEMP SWITCH	5-17
0VDC FROM ENGINE PRESSURE SWITCH	5-18
D+ FROM ALTERNATOR	5-19
J1939 CAN HIGH	5-20
J1939 CAN LOW	5-21
W+ FROM ALTERNATOR	5-22
RT REVERSE SOLENOID	5-23
RT FORWARD SOLENOID	5-24
LT REVERSE SOLENOID	5-25
LT FORWARD SOLENOID	5-26
FUEL SOLENOID 12VDC	5-27
SIREN/BEACON 12VDC	5-28
	5-29
0VDC TO ECU CONTROL RELAY	5-30
12VDC SUPPLY TO ECU	5-31
0VDC FROM DIAGNOSTIC SWITCH	5-32
12VDC TO DIAGNOSTIC LAMP	5-33
UNUSED	5-34
UNUSED	5-35

BATT 12VDC SUPPLY FOR PANEL	7-1
	7-1
BATT 12VDC SUPPLY FOR FANS	7-2
	7-2
BATT 0VDC SUPPLY	7-3
	7-3
	7-3

5A 12VDC SUPPLY TO MCU-200	6-1
5A 12VDC SUPPLY TO ENGINE SENSORS	6-2
15A 12VDC SUPPLY TO TRACKS	6-3
30A 12VDC STARTER SOLENOID SUPPLY	6-4
15A 12VDC FUEL SOLENOID SUPPLY	6-5
15A 12VDC SUPPLY AUX CONVEYOR	6-6
15A 12VDC SIREN / BEACON SUPPLY	6-7
15A COOLING FAN 1 12VDC	6-8
15A COOLING FAN 2 12VDC	6-9
5A 12VDC SUPPLY TO MCU-200 OUTPUTS	6-10
10A RADIO TIPPING GRID	6-11

BATT 12VDC SUPPLY FOR PRE HEAT	8-1
	8-1
SWITECHED SUPPLY FOR PRE HEAT	8-2
	8-2
CONTROL SWITCH FROM ECU	8-3

MAIN MOTOR 1	1U1
	1V1
	1W1
	1V2
	1W2
	1U2
	EARTH
MAIN MOTOR 2	2U1
	2V1
	2W1
	2V2
	2W2
	2U2
	EARTH

ESTOP 1	2-1
	2-2

FAST TRACKS	3-1
0VDC SUPPLY	3-2
TRACKS ENABLED	3-3
12VDC SUPPLY	3-4
LT FORWARD INPUT	3-5
RT FORWARD INPUT	3-6
MANUAL STOP OUT	3-7
LT REVERSE INPUT	3-8
RT REVERSE INPUT	3-9
TRACKS ON (MANUAL)	3-10
TRACKS ON (RADIO LATCH)	3-11
MANUAL STOP RETURN	3-12
RADIO STOP OUT	3-15
RADIO STOP RETURN	3-16

DIESEL MODE VOLT FREE ESTOP NO SIG OUT	10-1
DIESEL MODE VOLT FREE ESTOP NO SIG OUT	10-2
ELECTRIC MODE VOLT FREE ESTOP NO SIG OUT	10-3
ELECTRIC MODE VOLT FREE ESTOP NO SIG OUT	10-4
REMOTE ESTOP RELAY COIL A1	10-5
REMOTE ESTOP RELAY COIL A2	10-6
ESTOP LINK1	10-7
ESTOP LINK1	10-8

REV.	DATE	BY	DETAILS
3	21/04/09	SL	AS BUILT
4	02/02/10	PMK	UPDATED FOR PNP AND MPESP-1006

ECO

NOTES
NOT TO SCALE

DRAWING TITLE
ELECTRICAL SCHEMATICS

MACHINE TYPE
CH1700 DUAL POWER
C/W DEUTZ 2013 E ENGINE

THE INFORMATION HEREIN IS THE PROPERTY OF TEREX CORPORATION AND/OR ITS SUBSIDIARIES. WITHOUT WRITTEN PERMISSION, ANY COPYING, TRANSMITTAL TO OTHERS, AND ANY USE EXCEPT THAT FOR WHICH IT IS LOANED, IS PROHIBITED.

POWERSCREEN

ECO

POWERSCREEN ELECTRICAL DEPARTMENT

PRO-1236

REV 0

SHEET 18 OF 18

A3

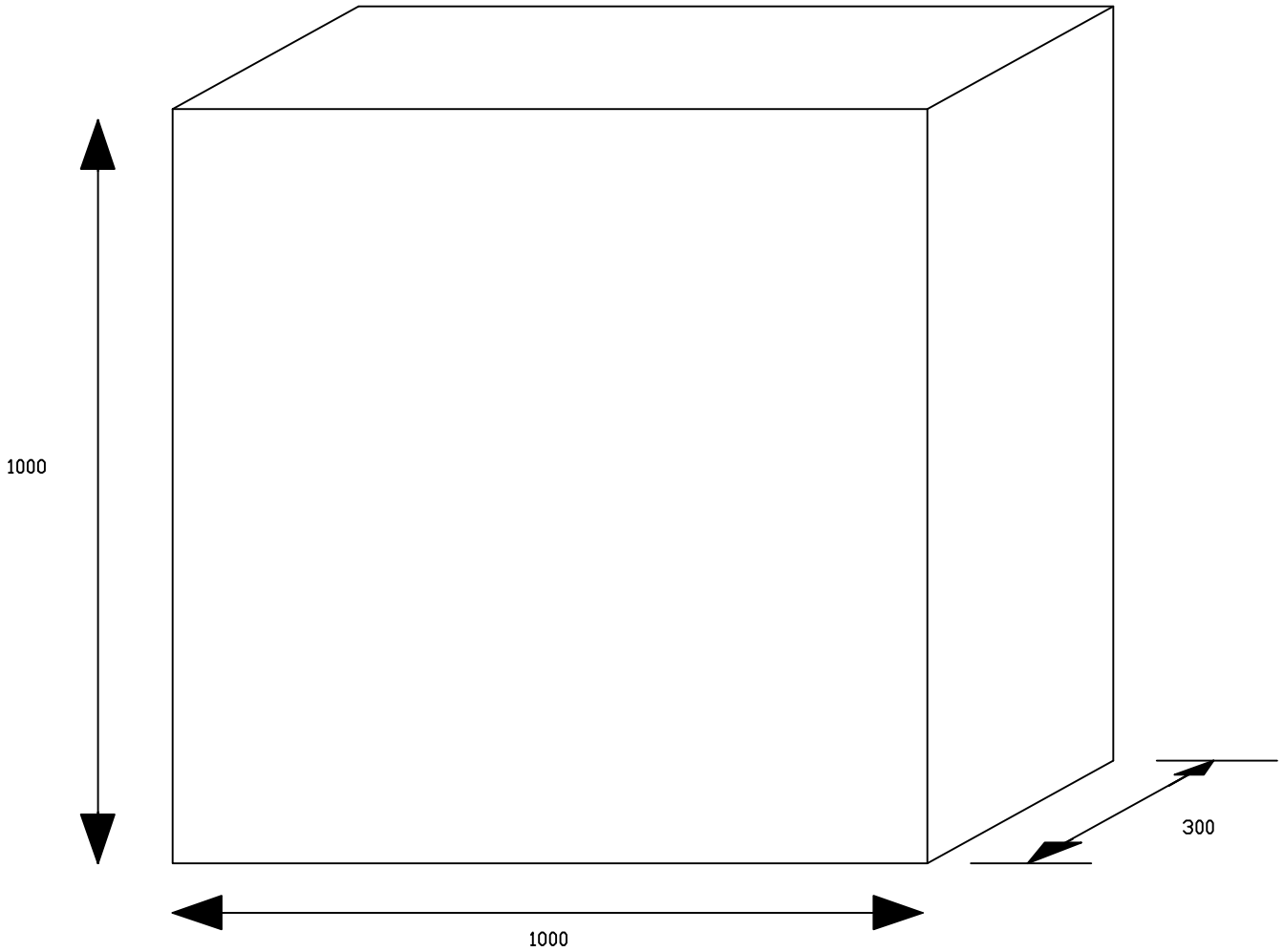

REV.	DATE	BY	DETAILS	ECO
7	25/03/11	PMK	TRACK RELAYS ADDED	
6	31/08/10	PMK	UPDATED FOR LOOM PLUG CHANGE	
5	02/02/10	PMK	UPDATED FOR PNP AND MPESP-1006	
3	21/04/09	SL	AS BUILT	

NOTES

NOT TO SCALE

DRAWING TITLE

ELECTRICAL SCHEMATICS

MACHINE TYPE

CH1700 DUAL POWER
C/W CAT C4.4M ENGINE

THE INFORMATION HEREON IS THE PROPERTY OF TEREX CORPORATION AND/OR ITS SUBSIDIARIES. WITHOUT WRITTEN PERMISSION, ANY COPYING, TRANSMITTAL TO OTHERS, AND ANY USE EXCEPT THAT FOR WHICH IT IS LOANED, IS PROHIBITED.

POWERSCREEN
POWERSCREEN INTERNATIONAL DISTRIBUTION LTD

ECO

POWERSCREEN ELECTRICAL DEPARTMENT

SHEET 1 OF 18

PRD-1236

REV 0

A3

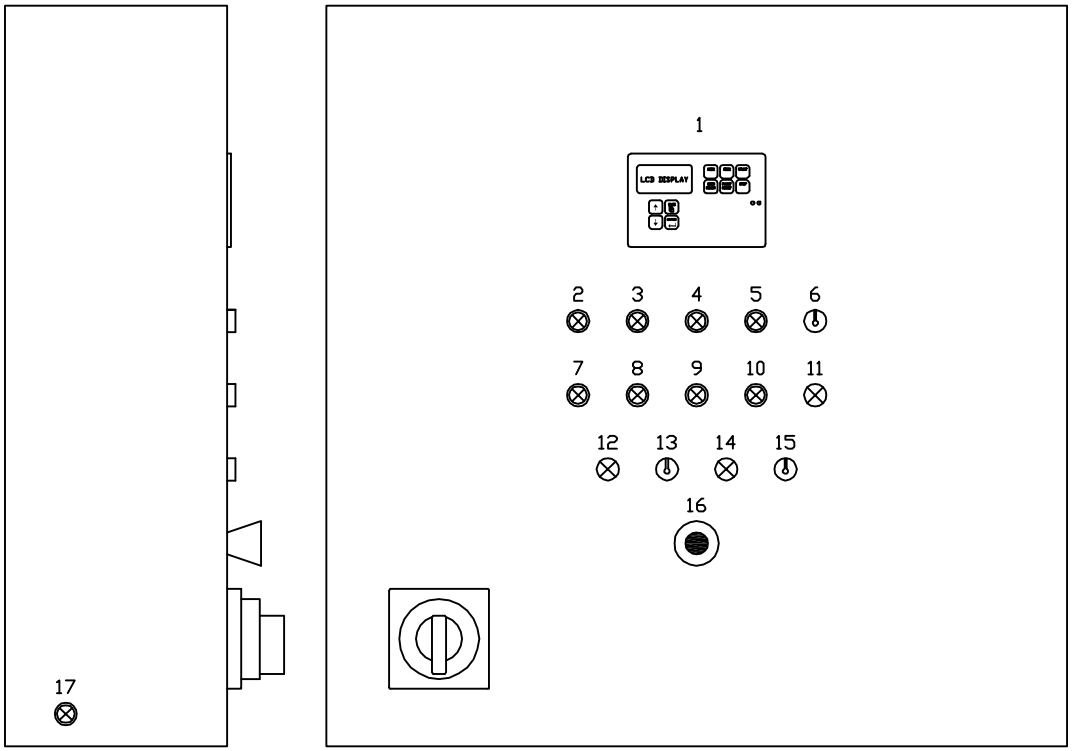

KEY	COMPONENT	TAG
1	POWERSCREEN MCU100 CONTROL UNIT	A1
2	PRE-START ILLUMINATED PUSH BUTTON	PB2/L5
3	OIL COOLER ILLUMINATED START PUSH BUTTON	PB4/L6
4	CHIEFTAIN MAIN MOTOR 1 ILLUMINATED START PUSH BUTTON	PB6/L8
5	CHIEFTAIN MAIN MOTOR 2 ILLUMINATED START PUSH BUTTON	PB8/L10
6	3-POSITION DIESEL / OFF / ELECTRIC SWITCH	S1
7	EMERGENCY STOP ILLUMINATED RESET PUSH BUTTON	PB1/L2
8	OIL COOLER ILLUMINATED STOP PUSH BUTTON	PB3/L7
9	CHIEFTAIN MAIN MOTOR 1 ILLUMINATED STOP PUSH BUTTON	PB5/L9
10	CHIEFTAIN MAIN MOTOR 2 ILLUMINATED STOP PUSH BUTTON	PB7/L11
11	ELECTRIC MODE SELECTED INDICATOR	L1
12	TEST MODE SELECTED INDICATOR	L3
13	3-POSITION TEST / OFF / MANUAL KEY SWITCH	S2
14	MANUAL MODE SELECTED INDICATOR	L4
15	ENGINE IGNITION SWITCH	S3
16	EMERGENCY STOP BUTTON	ES0
17	CAT PRE-HEAT PUSH BUTTON	PB10

REV.	DATE	BY	DETAILS	ECO
7	25/03/11	PMK	TRACK RELAYS ADDED	
6	31/08/10	PMK	UPDATED FOR LOOM PLUG CHANGE	
5	02/02/10	PMK	UPDATED FOR PNP AND MPESP-1006	
3	21/04/09	SL	AS BUILT	

NOTES: NOT TO SCALE

DRAWING TITLE: ELECTRICAL SCHEMATICS

MACHINE TYPE: CH1700 DUAL POWER C/W CAT C4.4M ENGINE

THE INFORMATION HEREON IS THE PROPERTY OF TEREX CORPORATION AND/OR ITS SUBSIDIARIES. WITHOUT WRITTEN PERMISSION, ANY COPYING, TRANSMITTAL TO OTHERS, AND ANY USE EXCEPT THAT FOR WHICH IT IS LOANED, IS PROHIBITED.

POWERSCREEN
POWERSCREEN INTERNATIONAL DISTRIBUTION LTD
DUNGANNON, CO TYRONE, N. IRELAND
TEL: 02887 749741 FAX: 02887 746569

ECO | POWERSCREEN ELECTRICAL DEPARTMENT | SHEET 2 OF 18

PRD-1236 | REV 0 | A3

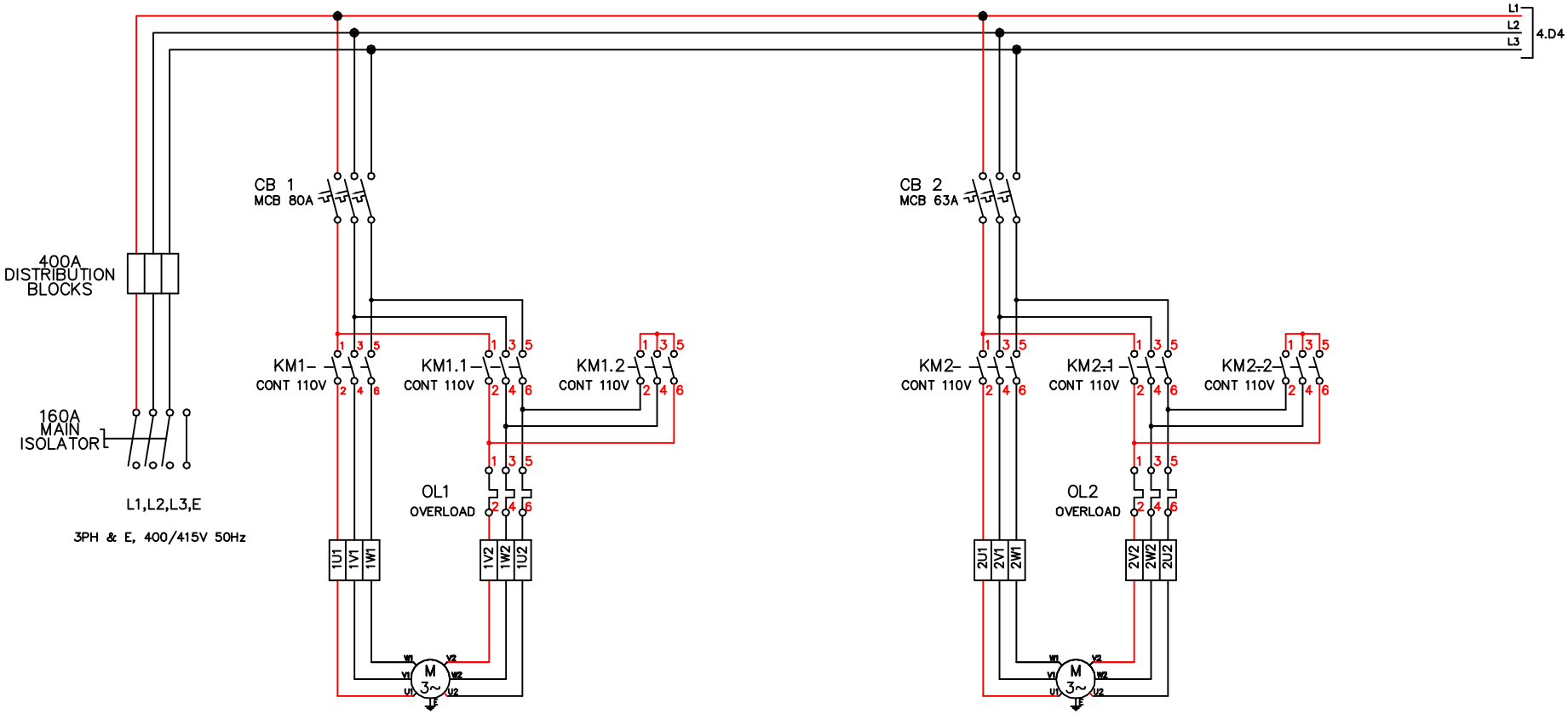

CHIEFTAIN 1700 DP MAIN MOTOR 1
37Kw (74A FLC)

CHIEFTAIN 1700 DP MAIN MOTOR 2
30Kw (55A FLC)

REV.	DATE	BY	DETAILS	ECO
7	25/03/11	PMK	TRACK RELAYS ADDED	
6	31/08/10	PMK	UPDATED FOR LOOM PLUG CHANGE	
5	02/02/10	PMK	UPDATED FOR PNP AND MPESP-1006	
3	21/04/09	SL	AS BUILT	

NOTES
NOT TO SCALE

DRAWING TITLE
ELECTRICAL SCHEMATICS

MACHINE TYPE
CH1700 DUAL POWER
C/W CAT C4.4M ENGINE

THE INFORMATION HEREON IS THE PROPERTY OF TEREX CORPORATION AND/OR ITS SUBSIDIARIES. WITHOUT WRITTEN PERMISSION, ANY COPYING, TRANSMITTAL TO OTHERS, AND ANY USE EXCEPT THAT FOR WHICH IT IS LOANED, IS PROHIBITED.

POWERSCREEN

ECO

POWERSCREEN ELECTRICAL DEPARTMENT

SHEET 3 OF 18

PRD-1236

REV 0

A3

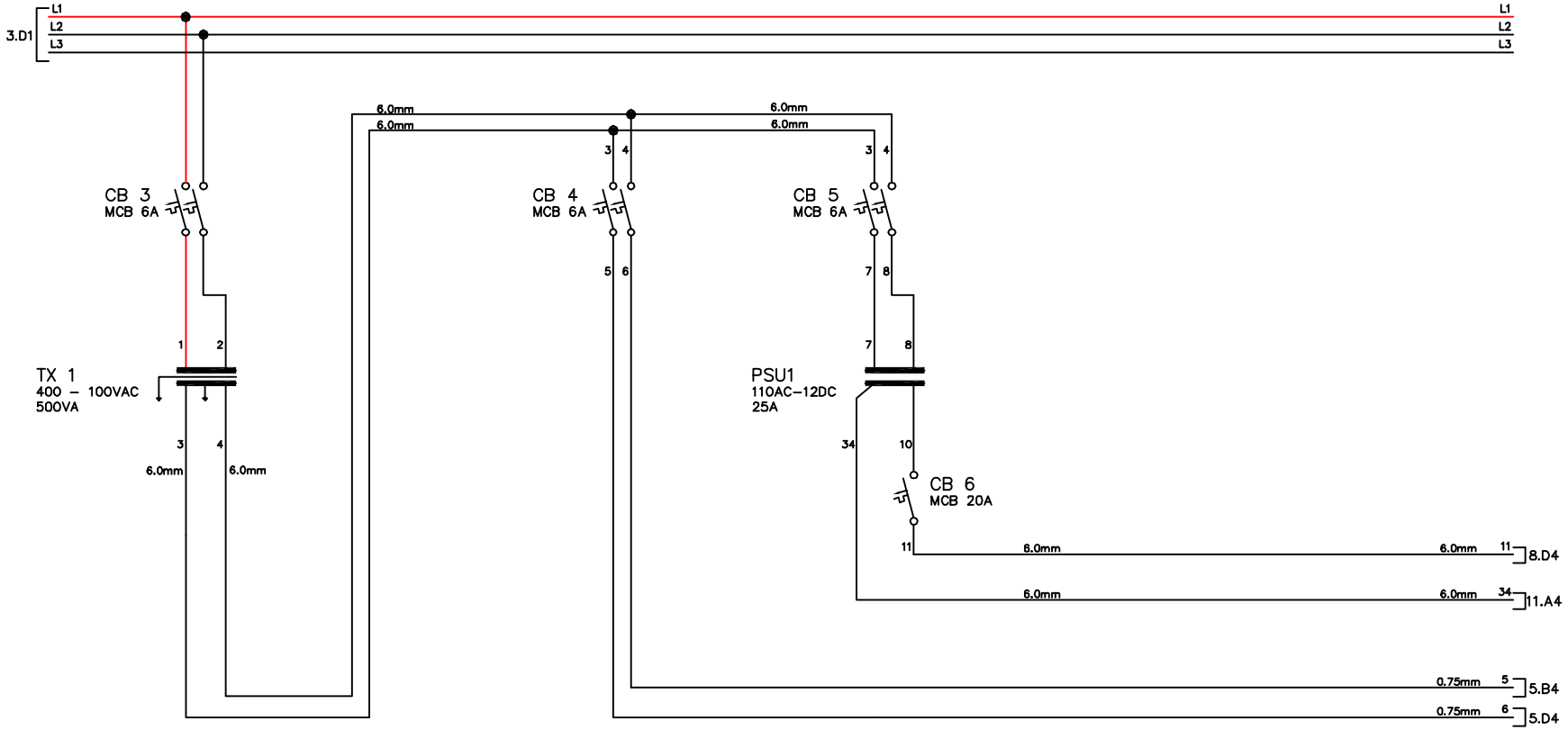

REV.	DATE	BY	DETAILS	ECO
7	25/03/11	PMK	TRACK RELAYS ADDED	
6	31/08/10	PMK	UPDATED FOR LOOM PLUG CHANGE	
5	02/02/10	PMK	UPDATED FOR PNP AND MPESP-1006	
3	21/04/09	SL	AS BUILT	

NOTES
NOT TO SCALE

DRAWING TITLE
ELECTRICAL SCHEMATICS

MACHINE TYPE
CH1700 DUAL POWER
C/W CAT C4.4M ENGINE

THE INFORMATION HEREON IS THE PROPERTY OF TEREX CORPORATION AND/OR ITS SUBSIDIARIES. WITHOUT WRITTEN PERMISSION, ANY COPYING, TRANSMITTAL TO OTHERS, AND ANY USE EXCEPT THAT FOR WHICH IT IS LOANED, IS PROHIBITED.

POWERSCREEN

ECO

POWERSCREEN ELECTRICAL DEPARTMENT

SHEET 4 OF 18

PRD-1236

REV 0

A3

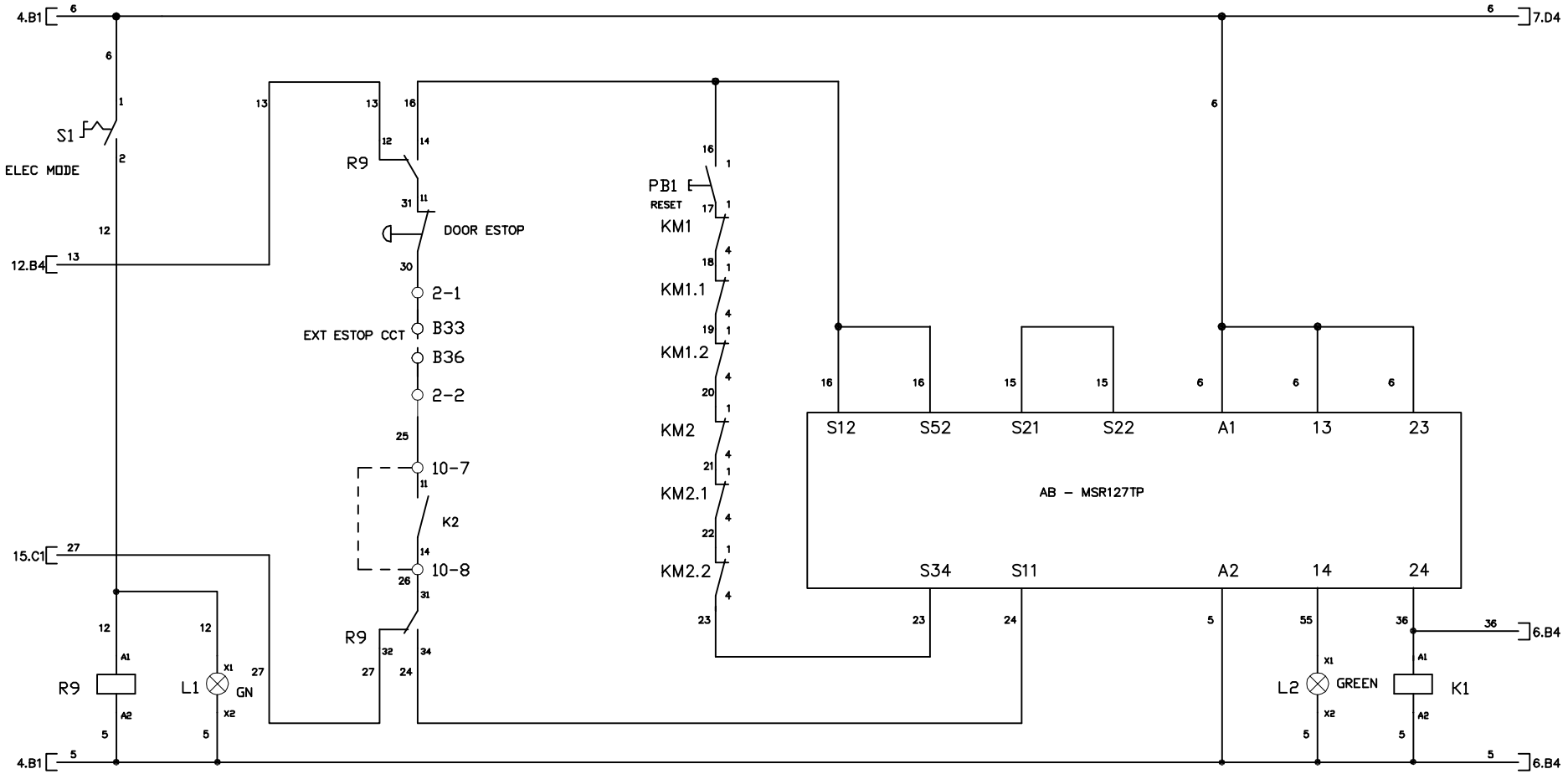

REV.	DATE	BY	DETAILS	ECO
7	25/03/11	PMK	TRACK RELAYS ADDED	
6	31/08/10	PMK	UPDATED FOR LOOM PLUG CHANGE	
5	02/02/10	PMK	UPDATED FOR PNP AND MPESP-1006	
3	21/04/09	SL	AS BUILT	

NOTES: NOT TO SCALE

DRAWING TITLE: ELECTRICAL SCHEMATICS

MACHINE TYPE: CH1700 DUAL POWER C/W CAT C4.4M ENGINE

THE INFORMATION HEREON IS THE PROPERTY OF TEREX CORPORATION AND/OR ITS SUBSIDIARIES. WITHOUT WRITTEN PERMISSION, ANY COPYING, TRANSMITTAL TO OTHERS, AND ANY USE EXCEPT THAT FOR WHICH IT IS LOANED, IS PROHIBITED.

POWERSCREEN INTERNATIONAL DISTRIBUTION LTD
120 CHAILEARD ROAD, DUNGANNON,
CO. TYRONE, N. IRELAND
TEL: 02887 767201 FAX: 02887 745569

ECO

POWERSCREEN ELECTRICAL DEPARTMENT

SHEET 5 OF 18

PRD-1236

REV 0

A3

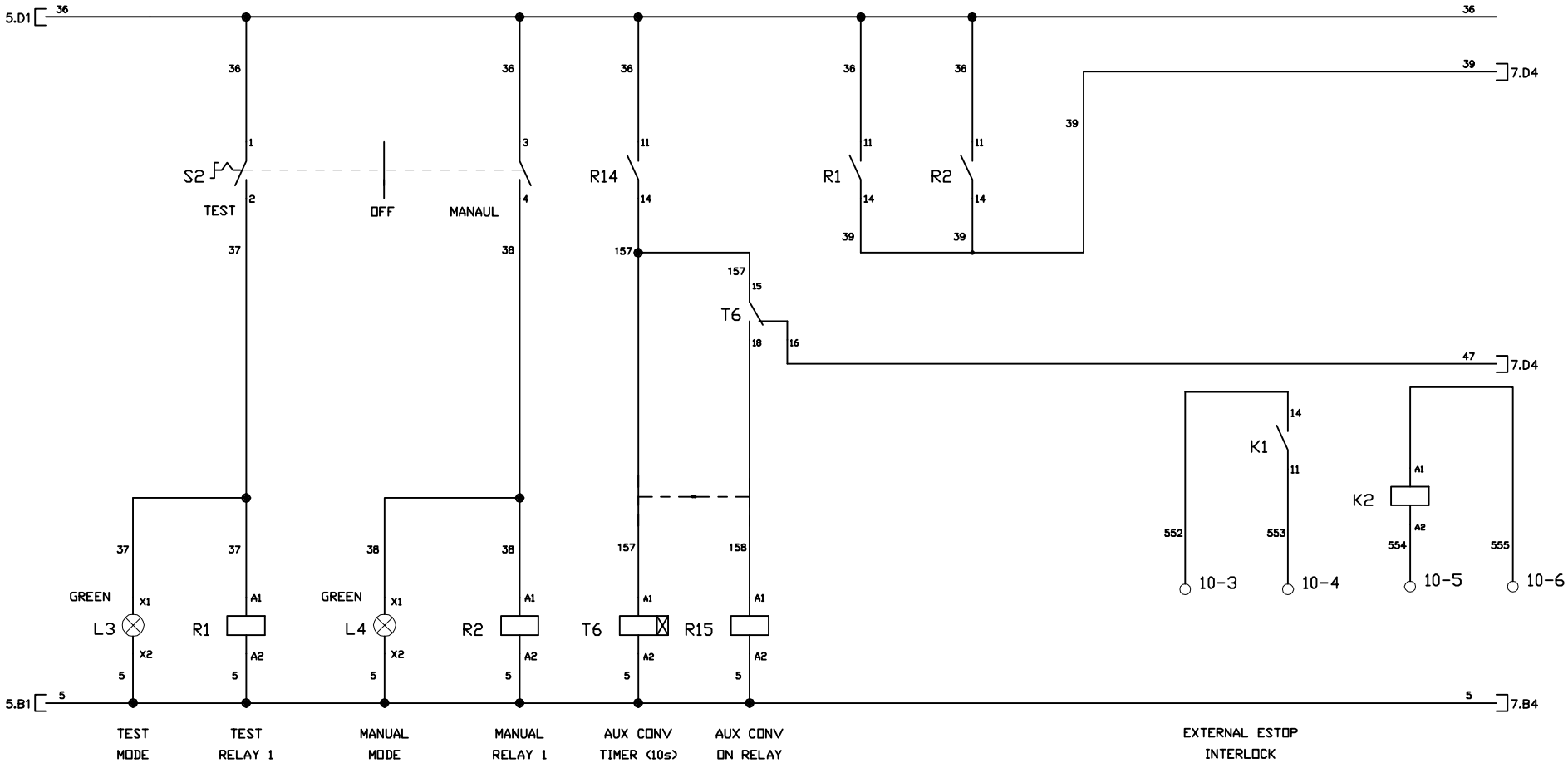

REV.	DATE	BY	DETAILS	ECO
7	25/03/11	PMK	TRACK RELAYS ADDED	
6	31/08/10	PMK	UPDATED FOR LOOM PLUG CHANGE	
5	02/02/10	PMK	UPDATED FOR PNP AND MPESP-1006	
3	21/04/09	SL	AS BUILT	

NOTES
NOT TO SCALE

DRAWING TITLE
ELECTRICAL SCHEMATICS

MACHINE TYPE
CH1700 DUAL POWER
C/W CAT C4.4M ENGINE

THE INFORMATION HEREON IS THE PROPERTY OF TEREX CORPORATION AND/OR ITS SUBSIDIARIES. WITHOUT WRITTEN PERMISSION, ANY COPYING, TRANSMITTAL TO OTHERS, AND ANY USE EXCEPT THAT FOR WHICH IT IS LOANED, IS PROHIBITED.

POWERSCREEN
POWERSCREEN INTERNATIONAL DISTRIBUTION LTD
DUNDALK, CO. LOUTH, IRELAND
TEL: 00353 42 74530 FAX: 00353 74539

ECO

POWERSCREEN ELECTRICAL DEPARTMENT

PRD-1236

REV 0

A3

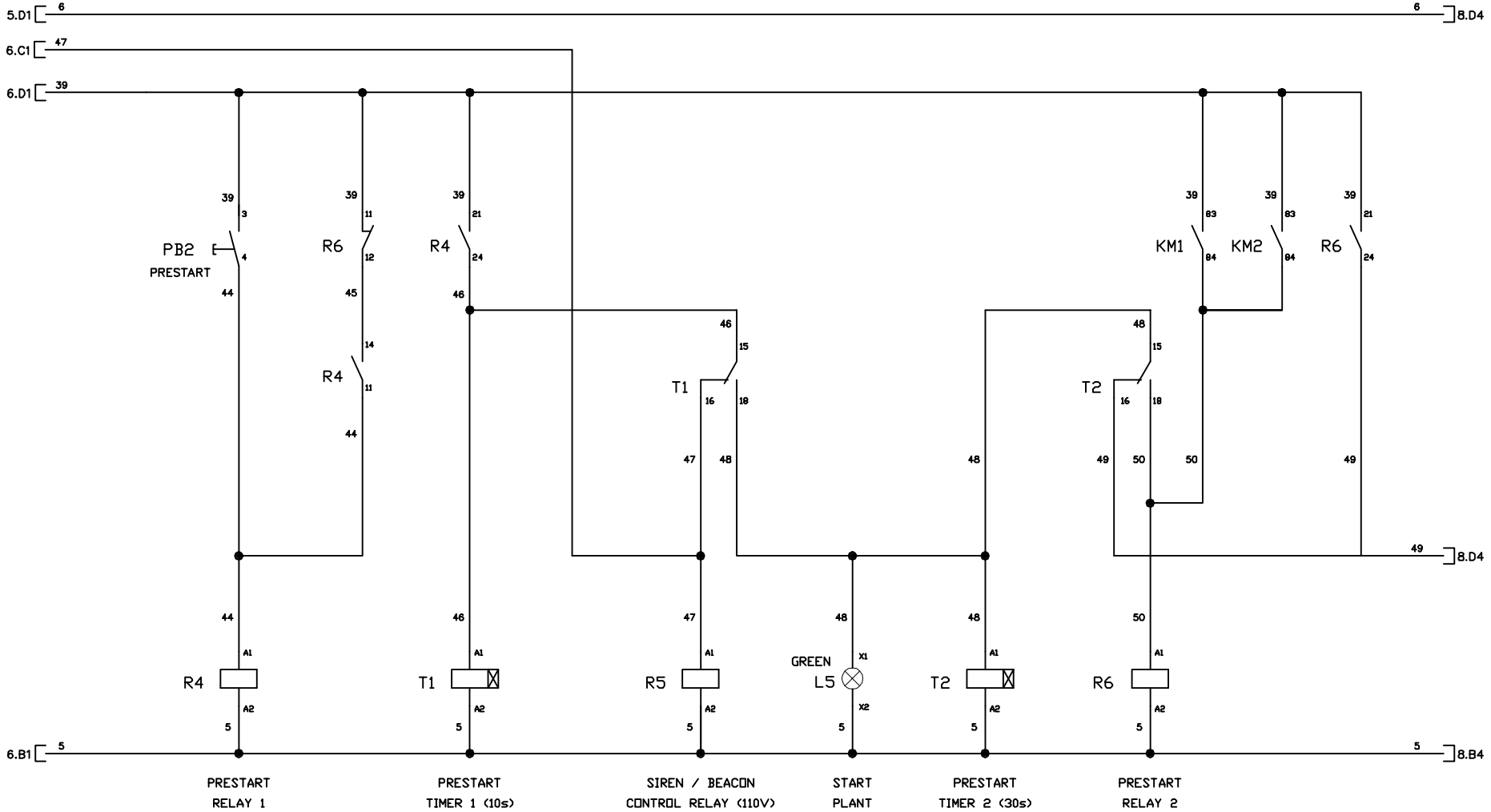

REV.	DATE	BY	DETAILS	ECO
7	25/03/11	PMK	TRACK RELAYS ADDED	
6	31/08/10	PMK	UPDATED FOR LOOM PLUG CHANGE	
5	02/02/10	PMK	UPDATED FOR PNP AND MPESP-1006	
3	21/04/09	SL	AS BUILT	

NOTES: NOT TO SCALE

DRAWING TITLE: ELECTRICAL SCHEMATICS

MACHINE TYPE: CH1700 DUAL POWER C/W CAT C4.4M ENGINE

THE INFORMATION HEREON IS THE PROPERTY OF TEREX CORPORATION AND/OR ITS SUBSIDIARIES. WITHOUT WRITTEN PERMISSION, ANY COPYING, TRANSMITTAL TO OTHERS, AND ANY USE EXCEPT THAT FOR WHICH IT IS LOANED, IS PROHIBITED.

POWERSCREEN INTERNATIONAL DISTRIBUTION LTD
209 COOLDUAD ROAD, DUNGANNON,
CO. TYRONE, N. IRELAND
TEL: 02887 740741 FAX: 02887 740569

ECO | POWERSCREEN ELECTRICAL DEPARTMENT | SHEET 7 OF 18

PRD-1236 | REV 0 | A3

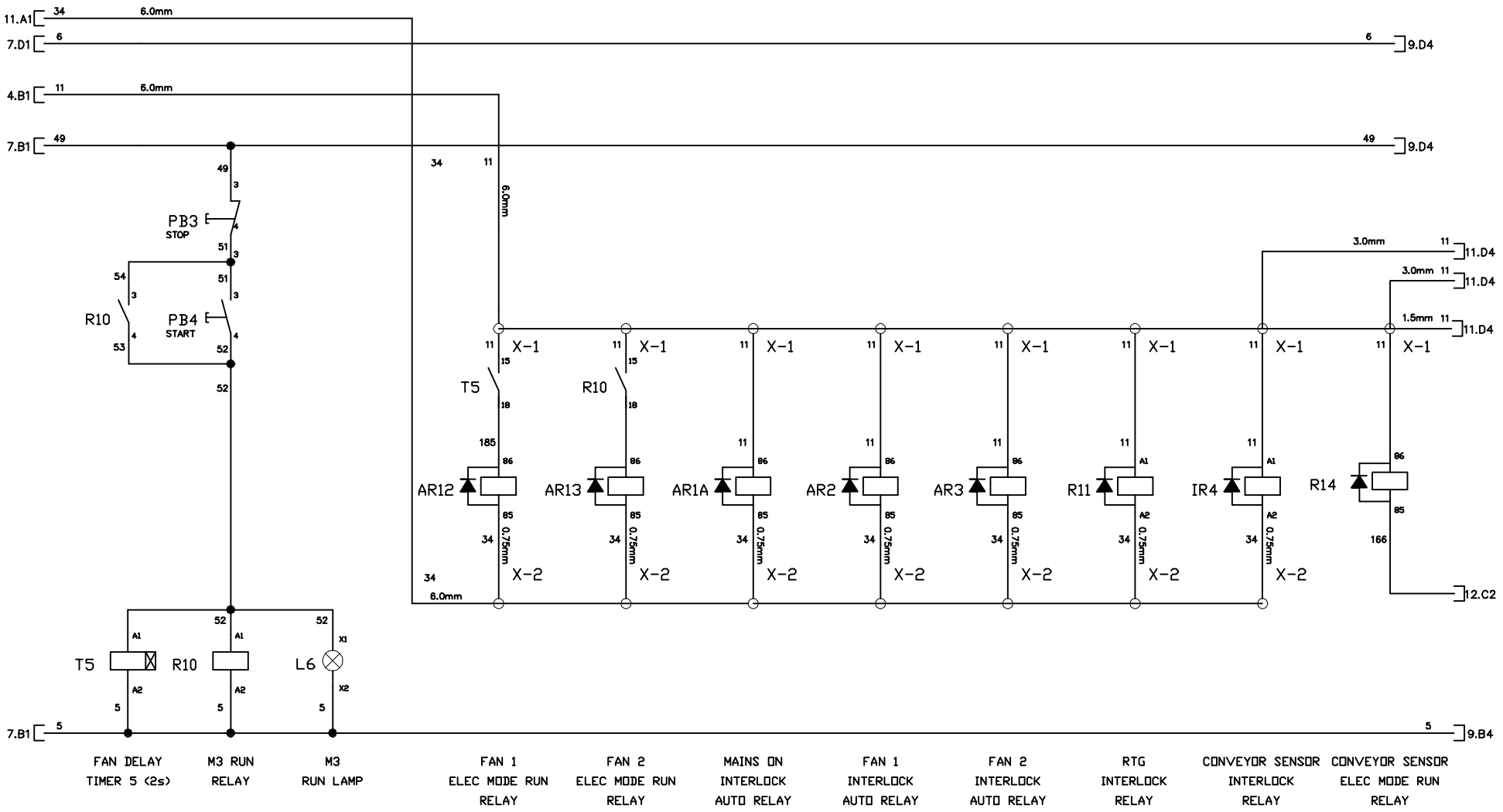

REV.	DATE	BY	DETAILS	ECO
7	25/03/11	PMK	TRACK RELAYS ADDED	
6	31/08/10	PMK	UPDATED FOR LOOM PLUG CHANGE	
5	02/02/10	PMK	UPDATED FOR PNP AND MPESP-1006	
3	21/04/09	SL	AS BUILT	

NOTES
NOT TO SCALE

DRAWING TITLE
ELECTRICAL SCHEMATICS

MACHINE TYPE
CH1700 DUAL POWER
C/W CAT C4.4M ENGINE

THE INFORMATION HEREON IS THE PROPERTY OF TEREX CORPORATION AND/OR ITS SUBSIDIARIES. WITHOUT WRITTEN PERMISSION, ANY COPYING, TRANSMITTAL TO OTHERS, AND ANY USE EXCEPT THAT FOR WHICH IT IS LOANED, IS PROHIBITED.

POWERSCREEN INTERNATIONAL DISTRIBUTION LTD
120 COOLDUAD ROAD, DUNGANNON,
CO. TYRONE, N. IRELAND
TEL: 02887 767201 FAX: 02887 745569

ECO

POWERSCREEN ELECTRICAL DEPARTMENT

SHEET 8 OF 18

PRD-1236

REV 0

A3

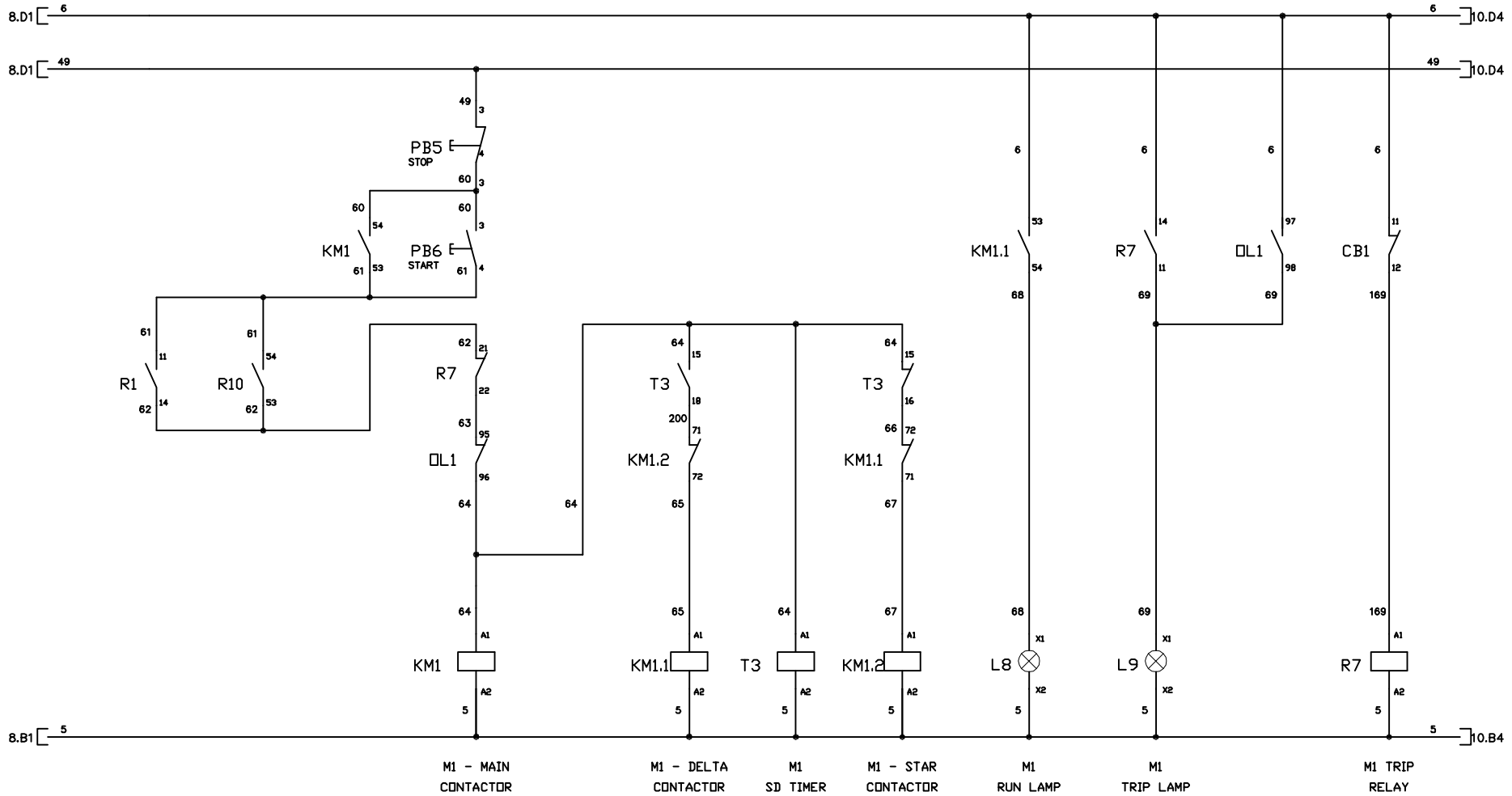

REV.	DATE	BY	DETAILS	ECO
7	25/03/11	PMK	TRACK RELAYS ADDED	
6	31/08/10	PMK	UPDATED FOR LOOM PLUG CHANGE	
5	02/02/10	PMK	UPDATED FOR PNP AND MPESP-1006	
3	21/04/09	SL	AS BUILT	

NOTES
NOT TO SCALE

DRAWING TITLE
ELECTRICAL SCHEMATICS

MACHINE TYPE
CH1700 DUAL POWER
C/W CAT C4.4M ENGINE

THE INFORMATION HEREON IS THE PROPERTY OF TEREX CORPORATION AND/OR ITS SUBSIDIARIES. WITHOUT WRITTEN PERMISSION, ANY COPYING, TRANSMITTAL TO OTHERS, AND ANY USE EXCEPT THAT FOR WHICH IT IS LOANED, IS PROHIBITED.

POWERSCREEN
POWERSCREEN INTERNATIONAL DISTRIBUTION LTD
DUNDALK, CO. LOUTH, IRELAND
TEL: 00353 42935 FAX: 00353 42939

ECO
POWERSCREEN ELECTRICAL DEPARTMENT
SHEET 9 OF 18

PRD-1236
REV 0
A3

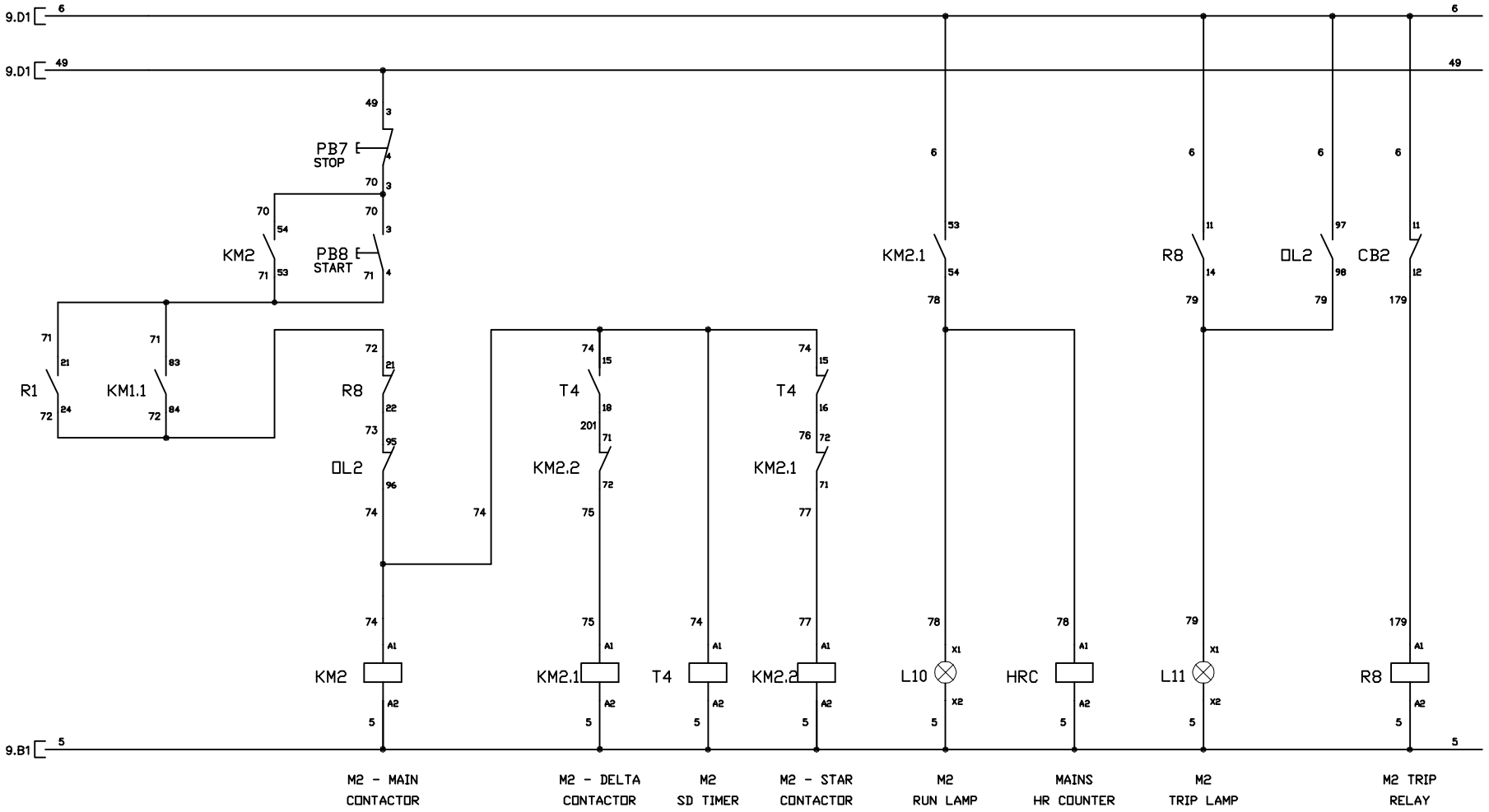

REV.	DATE	BY	DETAILS	ECO
7	25/03/11	PMK	TRACK RELAYS ADDED	
6	31/08/10	PMK	UPDATED FOR LOOM PLUG CHANGE	
5	02/02/10	PMK	UPDATED FOR PNP AND MPESP-1006	
3	21/04/09	SL	AS BUILT	

NOTES
NOT TO SCALE

DRAWING TITLE
ELECTRICAL SCHEMATICS

MACHINE TYPE
CH1700 DUAL POWER
C/W CAT C4.4M ENGINE

THE INFORMATION HEREON IS THE PROPERTY OF TEREX CORPORATION AND/OR ITS SUBSIDIARIES. WITHOUT WRITTEN PERMISSION, ANY COPYING, TRANSMITTAL TO OTHERS, AND ANY USE EXCEPT THAT FOR WHICH IT IS LOANED, IS PROHIBITED.

POWERSCREEN
POWERSCREEN INTERNATIONAL DISTRIBUTION LTD
209 COOLDUAD ROAD, DUNGANNON,
CO. TYRONE, N. IRELAND
TEL: 02887 767201 FAX: 02887 745569

ECO

POWERSCREEN ELECTRICAL DEPARTMENT

SHEET 10 OF 18

PRD-1236

REV 0

A3

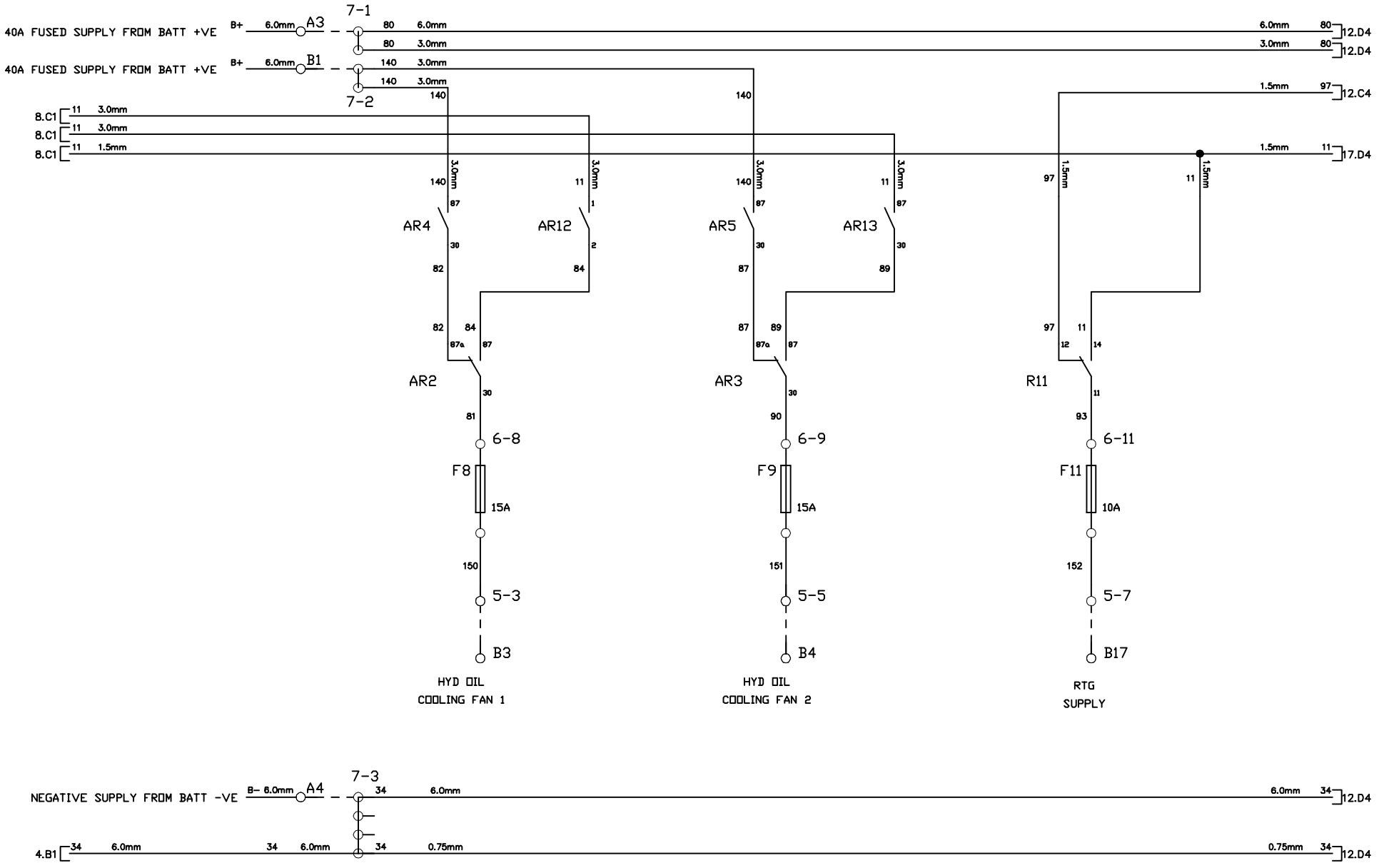

REV.	DATE	BY	DETAILS	ECO
7	25/03/11	PMK	TRACK RELAYS ADDED	
6	31/08/10	PMK	UPDATED FOR LOOM PLUG CHANGE	
5	02/02/10	PMK	UPDATED FOR PNP AND MPESP-1006	
3	21/04/09	SL	AS BUILT	

NOTES
NOT TO SCALE

DRAWING TITLE
ELECTRICAL SCHEMATICS

MACHINE TYPE
CH1700 DUAL POWER
C/W CAT C4.4M ENGINE

THE INFORMATION HEREON IS THE PROPERTY OF TEREX CORPORATION AND/OR ITS SUBSIDIARIES. WITHOUT WRITTEN PERMISSION, ANY COPYING, TRANSMITTAL TO OTHERS, AND ANY USE EXCEPT THAT FOR WHICH IT IS LOANED, IS PROHIBITED.

POWERSCREEN INTERNATIONAL DISTRIBUTION LTD
120 CHAILEARD ROAD, DUNGANNON,
CO. TYRONE, N. IRELAND
TEL: 02887 767171 FAX: 02887 745539

ECO

POWERSCREEN ELECTRICAL DEPARTMENT

SHEET 11 OF 18

PRD-1236 | REV 0 | A3

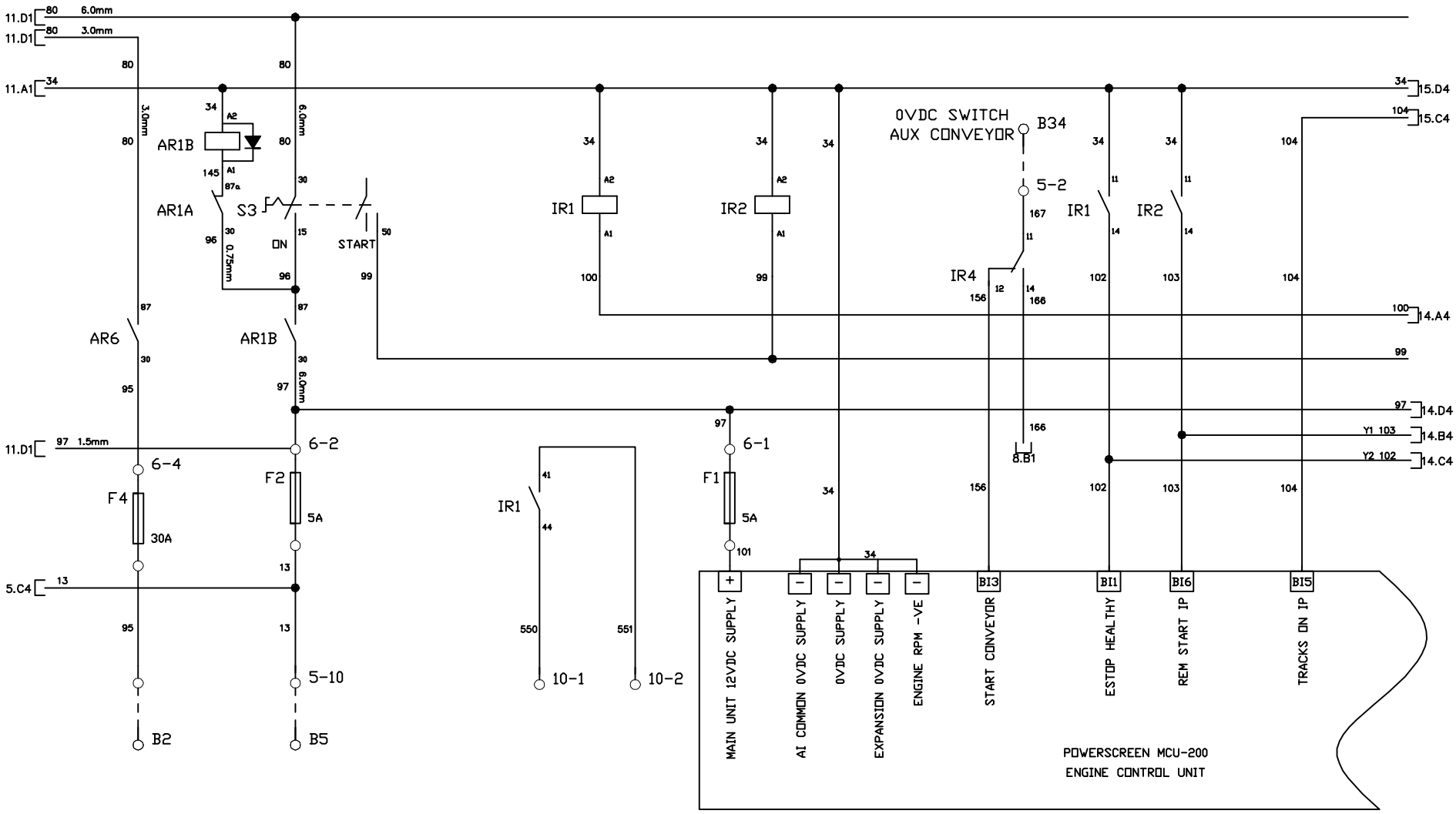

REV.	DATE	BY	DETAILS	ECO
7	25/03/11	PMK	TRACK RELAYS ADDED	
6	31/08/10	PMK	UPDATED FOR LOOM PLUG CHANGE	
5	02/02/10	PMK	UPDATED FOR PNP AND MPESP-1006	
3	21/04/09	SL	AS BUILT	

NOTES: NOT TO SCALE

DRAWING TITLE: ELECTRICAL SCHEMATICS

MACHINE TYPE: CH1700 DUAL POWER C/W CAT C4.4M ENGINE

THE INFORMATION HEREON IS THE PROPERTY OF TEREX CORPORATION AND/OR ITS SUBSIDIARIES. WITHOUT WRITTEN PERMISSION, ANY COPYING, TRANSMITTAL TO OTHERS, AND ANY USE EXCEPT THAT FOR WHICH IT IS LOANED, IS PROHIBITED.

POWERSCREEN INTERNATIONAL DISTRIBUTION LTD
120 CAULDUAFF ROAD, DUNGANNON,
CO. TYRONE, N. IRELAND
TEL: 02887 767171 FAX: 02887 745569

ECO

POWERSCREEN ELECTRICAL DEPARTMENT

SHEET 12 OF 18

PRD-1236 | REV 0 | A3

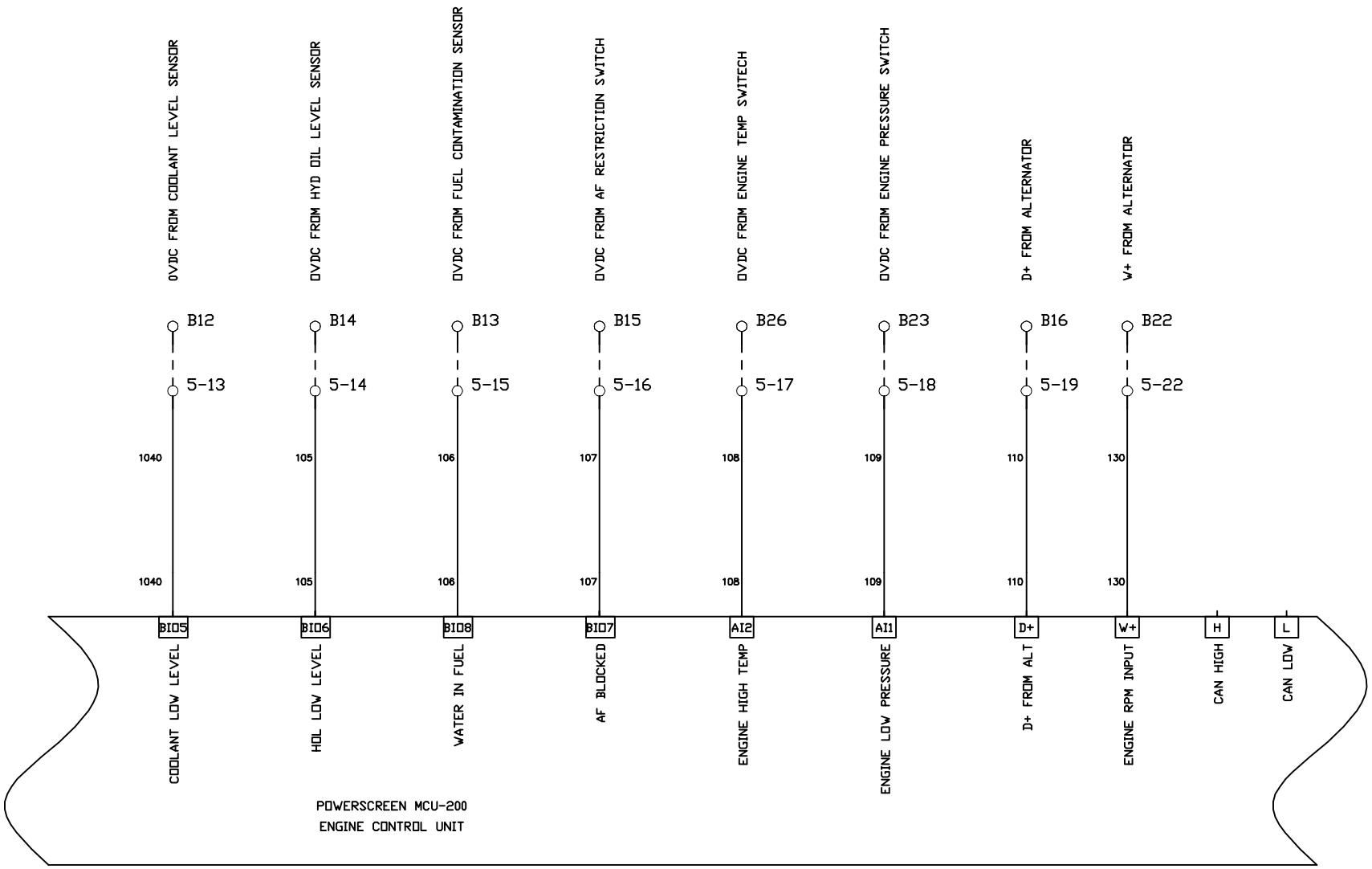

REV.	DATE	BY	DETAILS	ECO
7	25/03/11	PMK	TRACK RELAYS ADDED	
6	31/08/10	PMK	UPDATED FOR LOOM PLUG CHANGE	
5	02/02/10	PMK	UPDATED FOR PNP AND MPESP-1006	
3	21/04/09	SL	AS BUILT	

NOTES: NOT TO SCALE

DRAWING TITLE: ELECTRICAL SCHEMATICS

MACHINE TYPE: CH1700 DUAL POWER C/W CAT C4.4M ENGINE

THE INFORMATION HEREON IS THE PROPERTY OF TEREX CORPORATION AND/OR ITS SUBSIDIARIES. WITHOUT WRITTEN PERMISSION, ANY COPYING, TRANSMITTAL TO OTHERS, AND ANY USE EXCEPT THAT FOR WHICH IT IS LOANED, IS PROHIBITED.

POWERSCREEN INTERNATIONAL DISTRIBUTION LTD
120 COOLDUAD ROAD, DUNGANNON,
CO TYRONE, N. IRELAND
TEL: 02887 740741 FAX: 02887 745569

ECO | POWERSCREEN ELECTRICAL DEPARTMENT | SHEET 13 OF 18

PRD-1236 | REV 0 | A3

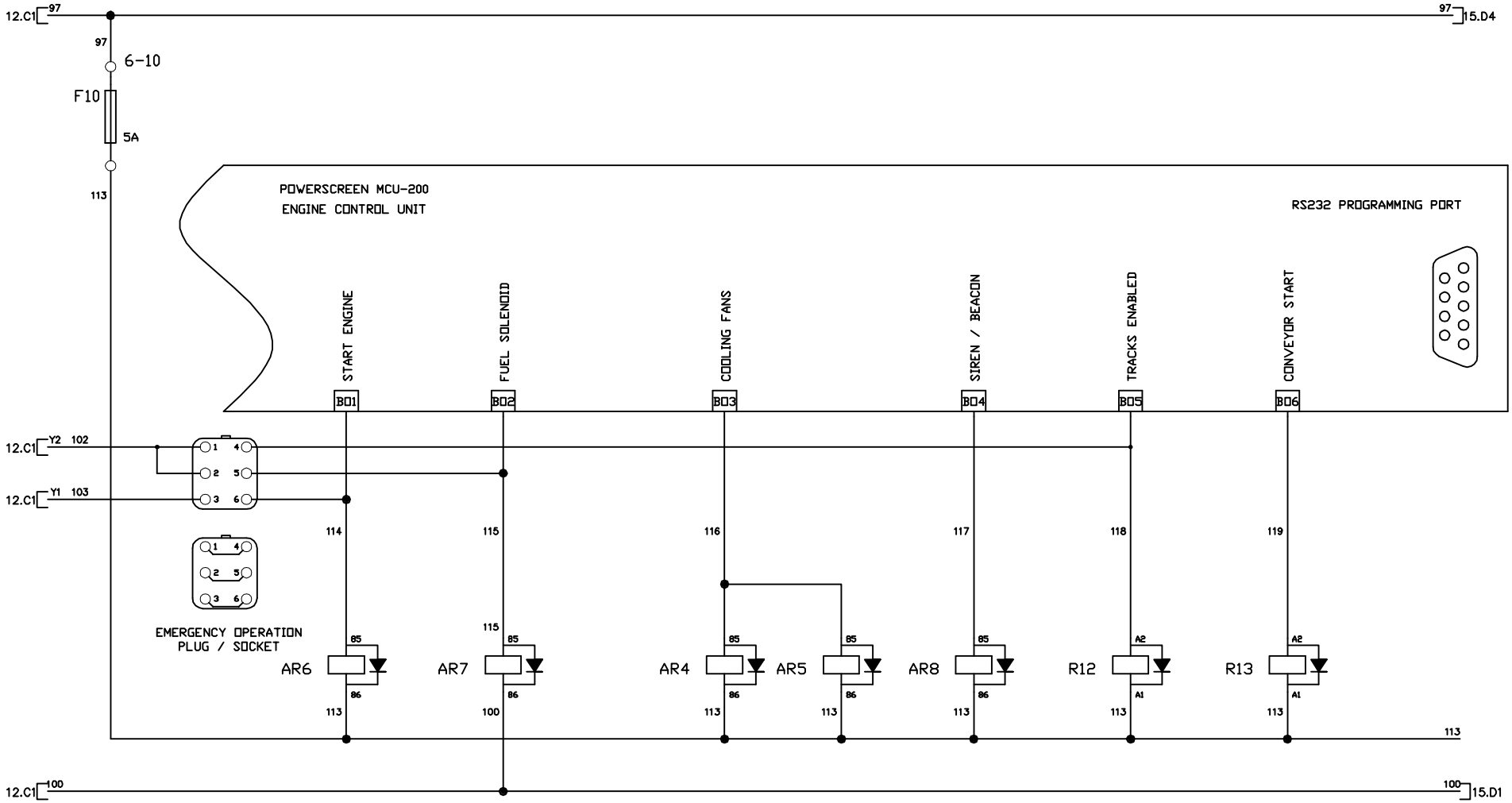

REV.	DATE	BY	DETAILS	ECO
7	25/03/11	PMK	TRACK RELAYS ADDED	
6	31/08/10	PMK	UPDATED FOR LOOM PLUG CHANGE	
5	02/02/10	PMK	UPDATED FOR PNP AND MPESP-1006	
3	21/04/09	SL	AS BUILT	

NOTES
NOT TO SCALE

DRAWING TITLE
ELECTRICAL SCHEMATICS

MACHINE TYPE
CH1700 DUAL POWER
C/W CAT C4.4M ENGINE

THE INFORMATION HEREON IS THE PROPERTY OF TEREX CORPORATION AND/OR ITS SUBSIDIARIES. WITHOUT WRITTEN PERMISSION, ANY COPYING, TRANSMITTAL TO OTHERS, AND ANY USE EXCEPT THAT FOR WHICH IT IS LOANED, IS PROHIBITED.

POWERSCREEN INTERNATIONAL DISTRIBUTION LTD
DUNDALK, CO. LOUTH, IRELAND
TEL: 00353 42 9337400 FAX: 00353 42 9337499

ECO
POWERSCREEN ELECTRICAL DEPARTMENT
SHEET 14 OF 18

PRD-1236
REV 0
A3

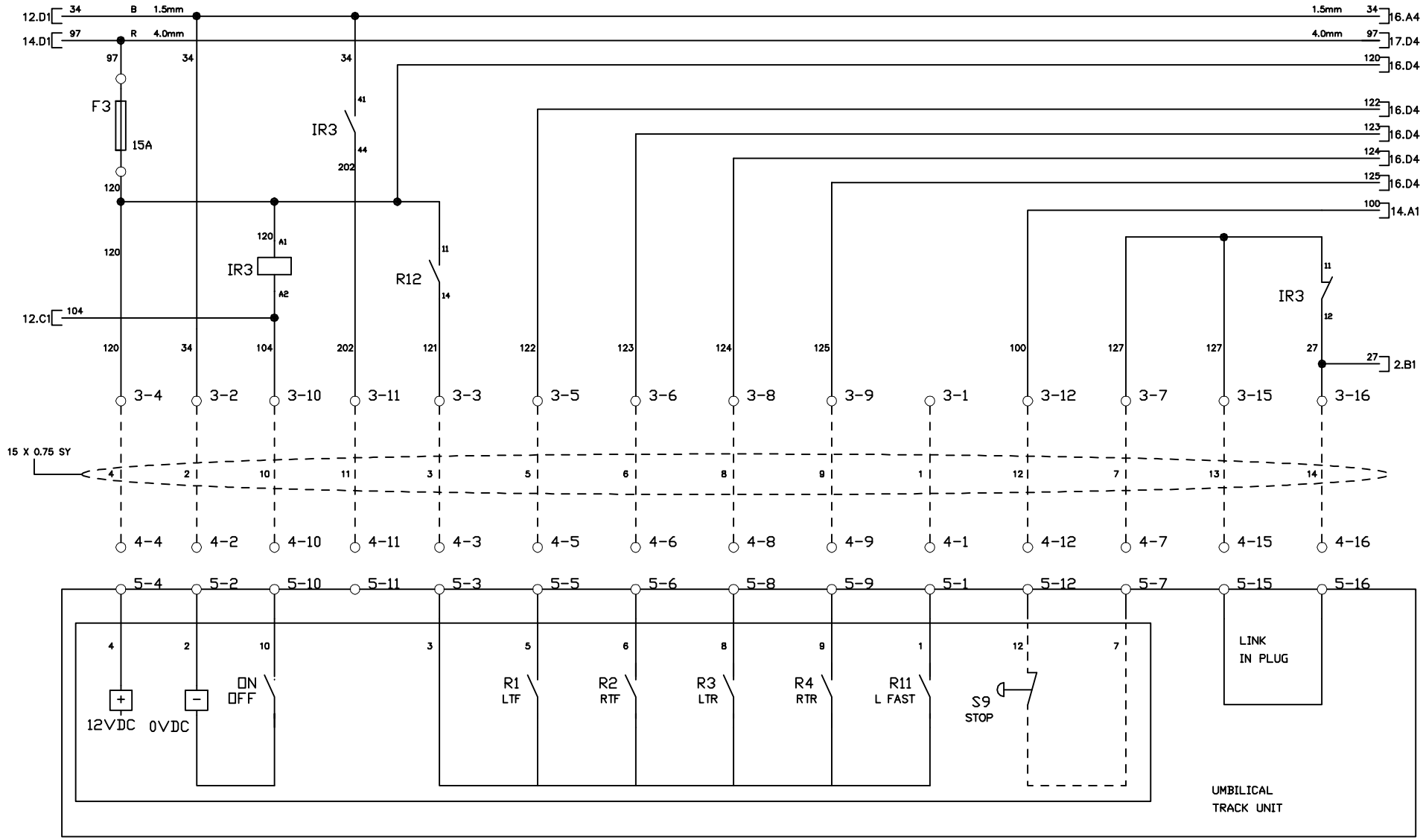

REV.	DATE	BY	DETAILS	ECO
7	25/03/11	PMK	TRACK RELAYS ADDED	
6	31/08/10	PMK	UPDATED FOR LOOM PLUG CHANGE	
5	02/02/10	PMK	UPDATED FOR PNP AND MPESP-1006	
3	21/04/09	SL	AS BUILT	

NOTES
NOT TO SCALE

DRAWING TITLE
ELECTRICAL SCHEMATICS

MACHINE TYPE
CH1700 DUAL POWER
C/W CAT C4.4M ENGINE

THE INFORMATION HEREON IS THE PROPERTY OF TEREX CORPORATION AND/OR ITS SUBSIDIARIES. WITHOUT WRITTEN PERMISSION, ANY COPYING, TRANSMITTAL TO OTHERS, AND ANY USE EXCEPT THAT FOR WHICH IT IS LOANED, IS PROHIBITED.

POWERSCREEN INTERNATIONAL DISTRIBUTION LTD
209 CHARLEMONT ROAD, DUNGANNON,
CO. TYRONE, N. IRELAND
TEL: 02887 747611 FAX: 02887 745569

ECO
POWERSCREEN ELECTRICAL DEPARTMENT
SHEET 15A OF 18

PRD-1236
REV 0
A3

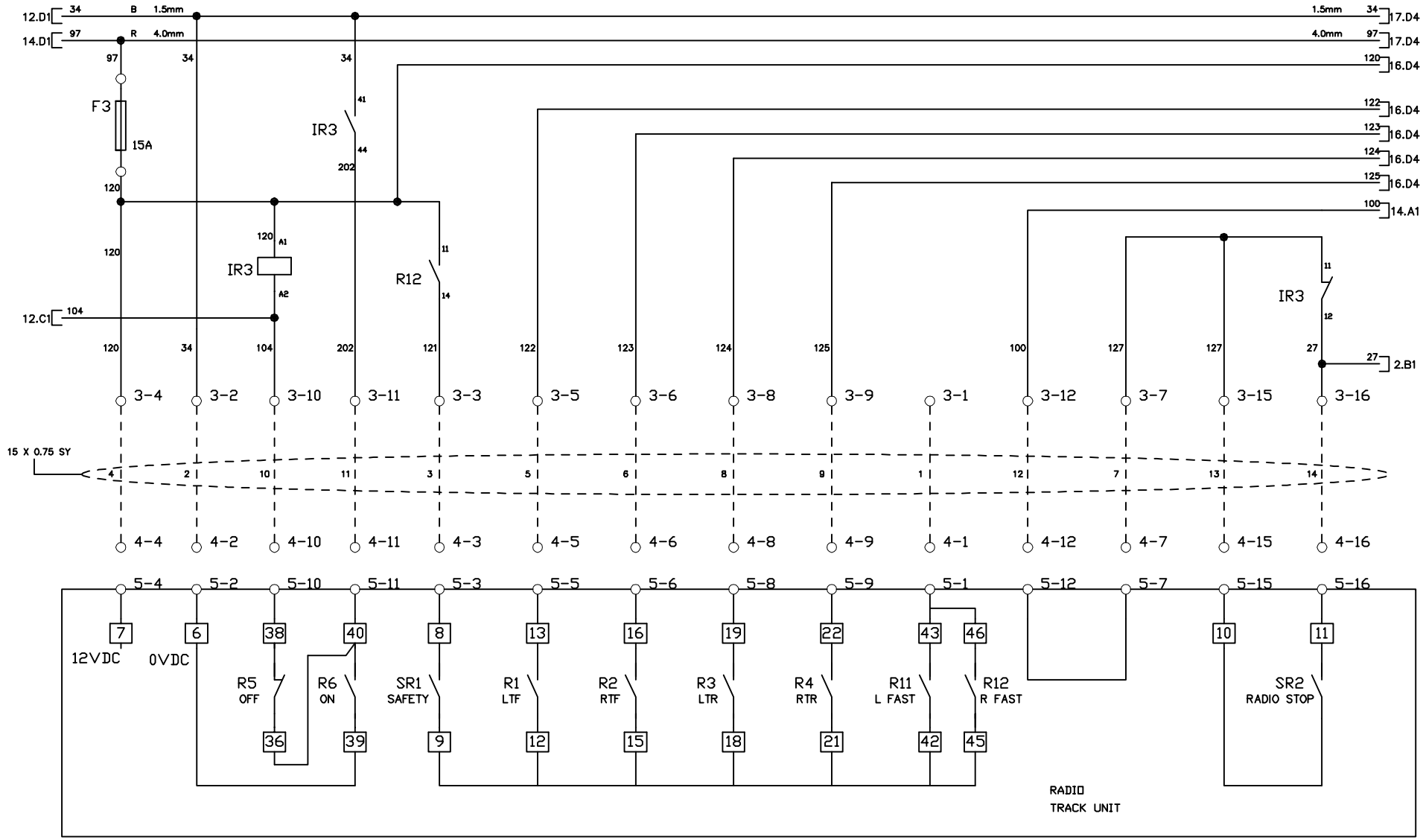

REV.	DATE	BY	DETAILS	ECO
7	25/03/11	PMK	TRACK RELAYS ADDED	
6	31/08/10	PMK	UPDATED FOR LOOM PLUG CHANGE	
5	02/02/10	PMK	UPDATED FOR PNP AND MPESP-1006	
3	21/04/09	SL	AS BUILT	

NOTES: NOT TO SCALE

DRAWING TITLE: ELECTRICAL SCHEMATICS

MACHINE TYPE: CH1700 DUAL POWER C/W CAT C4.4M ENGINE

THE INFORMATION HEREIN IS THE PROPERTY OF TEREX CORPORATION AND/OR ITS SUBSIDIARIES. WITHOUT WRITTEN PERMISSION, ANY COPYING, TRANSMITTAL TO OTHERS, AND ANY USE EXCEPT THAT FOR WHICH IT IS LOANED, IS PROHIBITED.

POWERSCREEN INTERNATIONAL DISTRIBUTION LTD
209 CHAILAND ROAD, DUNGANNON,
CO. TYRONE, N. IRELAND
TEL: 02887 742121 FAX: 02887 745569

ECO | POWERSCREEN ELECTRICAL DEPARTMENT | SHEET 15B OF 18

PRD-1236 | REV 0 | A3

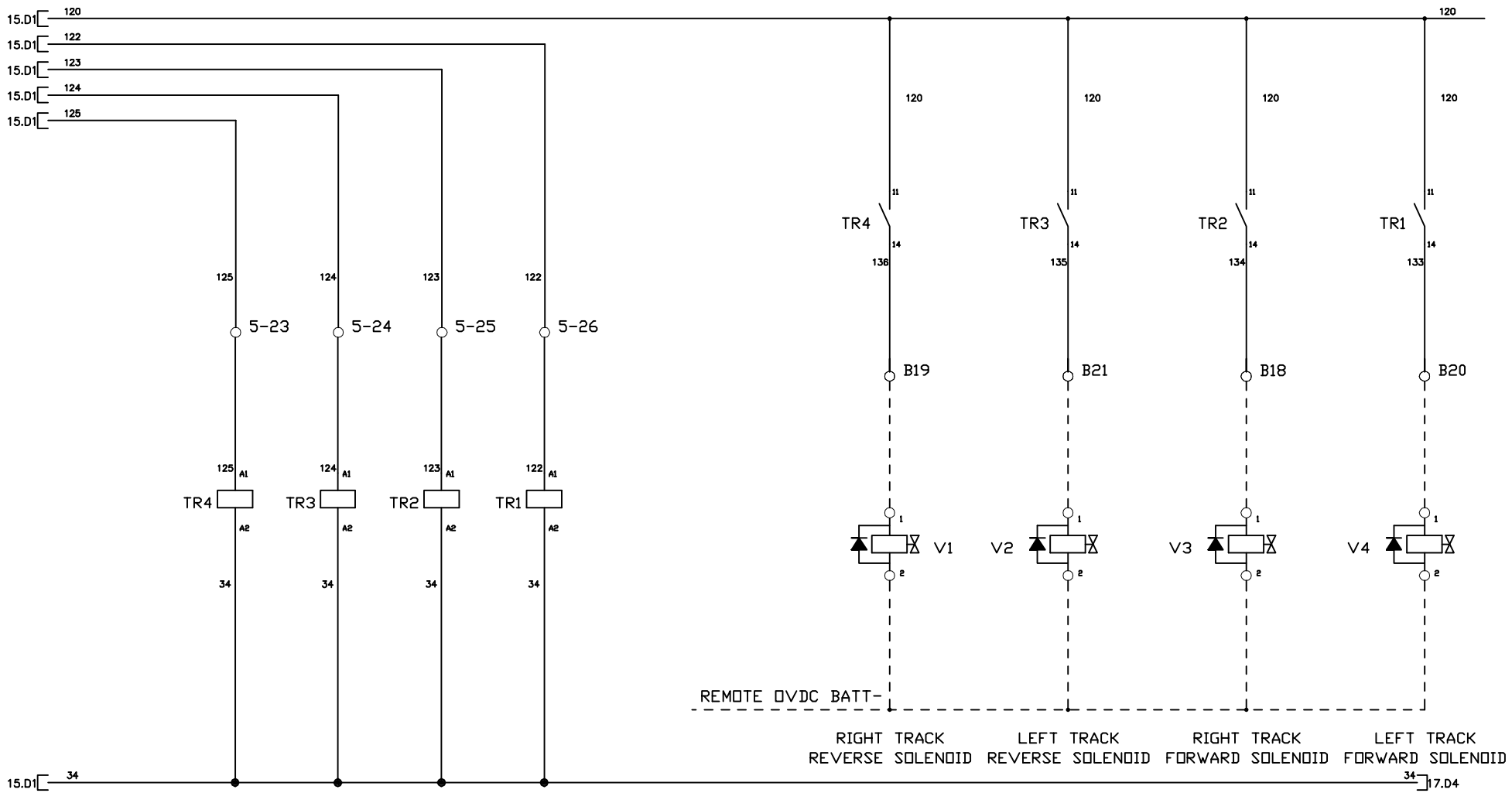

REV.	DATE	BY	DETAILS	ECO
7	25/03/11	PMK	TRACK RELAYS ADDED	
6	31/08/10	PMK	UPDATED FOR LOOM PLUG CHANGE	
5	02/02/10	PMK	UPDATED FOR PNP AND MPESP-1006	
3	21/04/09	SL	AS BUILT	

NOTES
NOT TO SCALE

DRAWING TITLE
ELECTRICAL SCHEMATICS

MACHINE TYPE
CH1700 DUAL POWER
C/W CAT C4.4M ENGINE

THE INFORMATION HEREON IS THE PROPERTY OF TEREX CORPORATION AND/OR ITS SUBSIDIARIES. WITHOUT WRITTEN PERMISSION, ANY COPYING, TRANSMITTAL TO OTHERS, AND ANY USE EXCEPT THAT FOR WHICH IT IS LOANED, IS PROHIBITED.

POWERSCREEN INTERNATIONAL DISTRIBUTION LTD
DUNDALK, CO. LOUTH, IRELAND
TEL: 00353 42 74530 FAX: 00353 42 74539

ECO

POWERSCREEN ELECTRICAL DEPARTMENT

SHEET 16 OF 18

PRD-1236

REV 0

A3

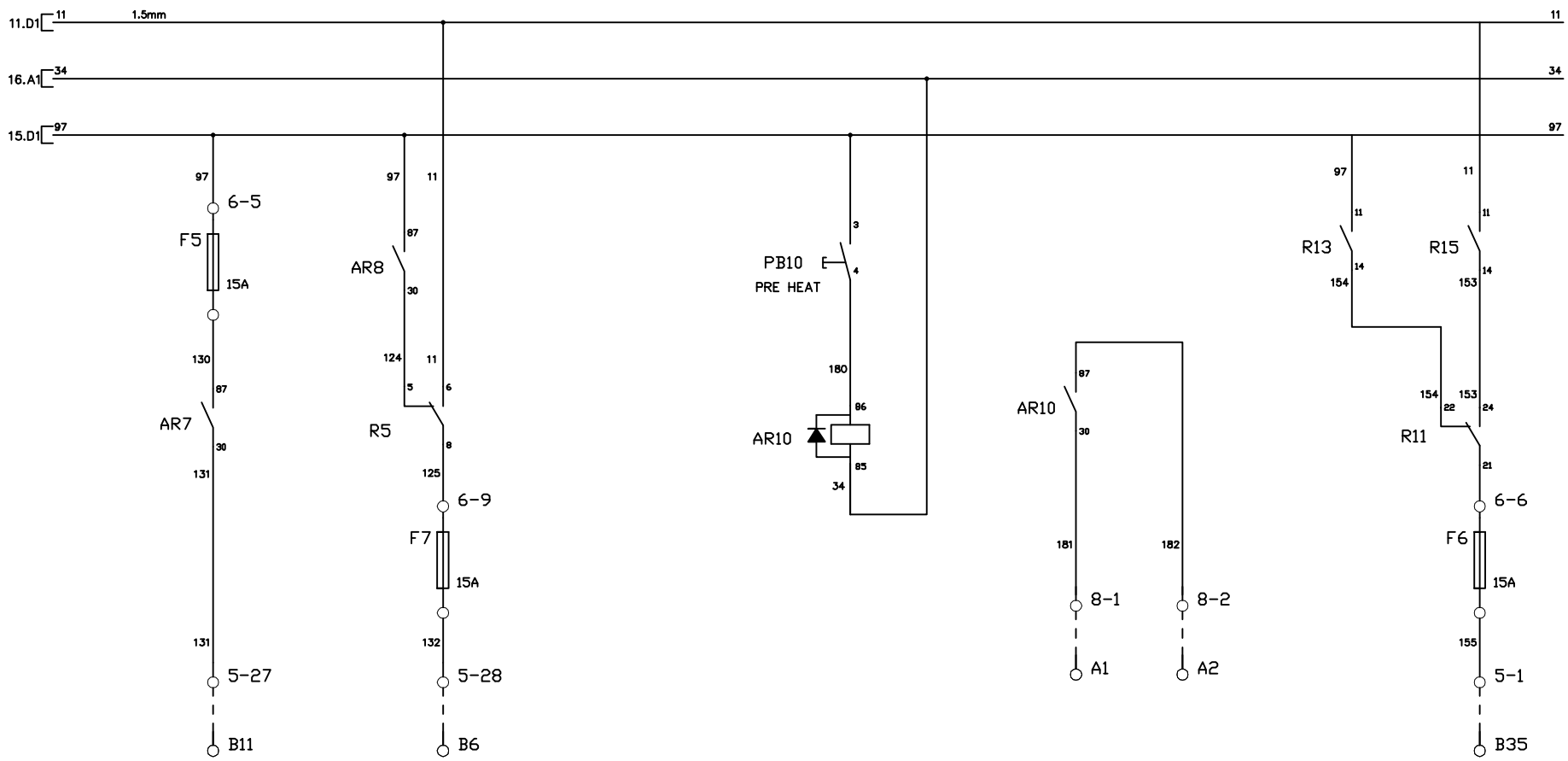

REV.	DATE	BY	DETAILS	ECO
7	25/03/11	PMK	TRACK RELAYS ADDED	
6	31/08/10	PMK	UPDATED FOR LOOM PLUG CHANGE	
5	02/02/10	PMK	UPDATED FOR PNP AND MPESP-1006	
3	21/04/09	SL	AS BUILT	

NOTES
NOT TO SCALE

DRAWING TITLE
ELECTRICAL SCHEMATICS

MACHINE TYPE
CH1700 DUAL POWER
C/W CAT C4.4M ENGINE

THE INFORMATION HEREON IS THE PROPERTY OF TEREX CORPORATION AND/OR ITS SUBSIDIARIES. WITHOUT WRITTEN PERMISSION, ANY COPYING, TRANSMITTAL TO OTHERS, AND ANY USE EXCEPT THAT FOR WHICH IT IS LOANED, IS PROHIBITED.

POWERSCREEN

ECO

POWERSCREEN ELECTRICAL DEPARTMENT

SHEET 17 OF 18

PRD-1236

REV 0

A3

REV.	DATE	BY	DETAILS	NOTES
7	25/03/11	PMK	TRACK RELAYS ADDED	
6	31/08/10	PMK	UPDATED FOR LOOM PLUG CHANGE	
5	02/02/10	PMK	UPDATED FOR PNP AND MPESP-1006	
3	21/04/09	SL	AS BUILT	
			ECO	NOT TO SCALE

AUX CONV PROXY 12V SUPPLY	5-1
AUX CONV PROXY 12V SIGNAL IN	5-2
COOLING FAN 1 12VDC	5-3
COOLING FAN 1 0VDC	5-4
COOLING FAN 2 12VDC	5-5
COOLING FAN 2 0VDC	5-6
RADIO TIPPING GRID 12VDC	5-7
RADIO TIPPING GRID 0VDC	5-8
SPARE	5-9
ENGINE SENSOR SUPPLY 1	5-10
ENGINE SENSOR SUPPLY 2	5-11
ENGINE SENSOR SUPPLY 3	5-12
0VDC FROM COOLANT LEVEL SENSOR	5-13
0VDC FROM HYD OIL LEVEL SENSOR	5-14
0VDC FROM FUEL CONTAMINATION SENSOR	5-15
0VDC FROM AF RESTRICTION SWITCH	5-16
0VDC FROM ENGINE TEMP SWITCH	5-17
0VDC FROM ENGINE PRESSURE SWITCH	5-18
D+ FROM ALTERNATOR	5-19
J1939 CAN HIGH	5-20
J1939 CAN LOW	5-21
W+ FROM ALTERNATOR	5-22
RT REVERSE SOLENOID	5-23
RT FORWARD SOLENOID	5-24
LT REVERSE SOLENOID	5-25
LT FORWARD SOLENOID	5-26
FUEL SOLENOID 12VDC	5-27
SIREN/BEACON 12VDC	5-28
SIREN/BEACON 0VDC	5-29
UNUSED	5-30
UNUSED	5-31
UNUSED	5-32
UNUSED	5-33
UNUSED	5-34
UNUSED	5-35

MAIN MOTOR 1	1U1
	1V1
	1W1
	1V2
	1W2
	1U2
	EARTH
MAIN MOTOR 2	2U1
	2V1
	2W1
	2V2
	2W2
	2U2
	EARTH

ESTOP 1	2-1
	2-2

BATT 12VDC SUPPLY FOR PANEL	7-1
	7-1
BATT 12VDC SUPPLY FOR FANS	7-2
	7-2
BATT 0VDC SUPPLY	7-3
	7-3
	7-3

FAST TRACKS	3-1
0VDC SUPPLY	3-2
TRACKS ENABLED	3-3
12VDC SUPPLY	3-4
LT FORWARD INPUT	3-5
RT FORWARD INPUT	3-6
MANUAL STOP OUT	3-7
LT REVERSE INPUT	3-8
RT REVERSE INPUT	3-9
TRACKS ON (MANUAL)	3-10
TRACKS ON (RADIO LATCH)	3-11
MANUAL STOP RETURN	3-12
RADIO STOP OUT	3-15
RADIO STOP RETURN	3-16

5A 12VDC SUPPLY TO MCU-200	6-1
5A 12VDC SUPPLY TO ENGINE SENSORS	6-2
15A 12VDC SUPPLY TO TRACKS	6-3
30A 12VDC STARTER SOLENOID SUPPLY	6-4
15A 12VDC FUEL SOLENOID SUPPLY	6-5
12VDC SUPPLY AUX CONVEYOR	6-6
5A 12VDC SIREN / BEACON SUPPLY	6-7
15A COOLING FAN 1 12VDC	6-8
15A COOLING FAN 2 12VDC	6-9
5A 12VDC SUPPLY TO MCU-200 OUTPUTS	6-10
10A RADIO TIPPING GRID	6-11

DIESEL MODE VOLT FREE ESTOP NO SIG OUT	10-1
DIESEL MODE VOLT FREE ESTOP NO SIG OUT	10-2
ELECTRIC MODE VOLT FREE ESTOP NO SIG OUT	10-3
ELECTRIC MODE VOLT FREE ESTOP NO SIG OUT	10-4
REMOTE ESTOP RELAY COIL A1	10-5
REMOTE ESTOP RELAY COIL A2	10-6
ESTOP LINK1	10-7
ESTOP LINK1	10-8

BATT 12VDC SUPPLY FOR PRE HEAT	8-1
	8-1
SWITECHED SUPPLY FOR PRE HEAT	8-2
	8-2

DRAWING TITLE: ELECTRICAL SCHEMATICS
MACHINE TYPE: CH1700 DUAL POWER C/W CAT C4.4M ENGINE

POWERSCREEN INTERNATIONAL DISTRIBUTION LTD
PROPRIETARY INFORMATION. INFORMATION LTD
THE INFORMATION HEREON IS THE PROPERTY OF TEREX CORPORATION AND/OR ITS SUBSIDIARIES. WITHOUT WRITTEN PERMISSION, ANY COPYING, TRANSMISSION OR USE OF THIS DRAWING, OTHER THAN FOR WHICH IT IS LOANED, IS PROHIBITED.

POWERSCREEN ELECTRICAL DEPARTMENT

PRD-1236 | REV 0 | A3 | SHEET 18 OF 18

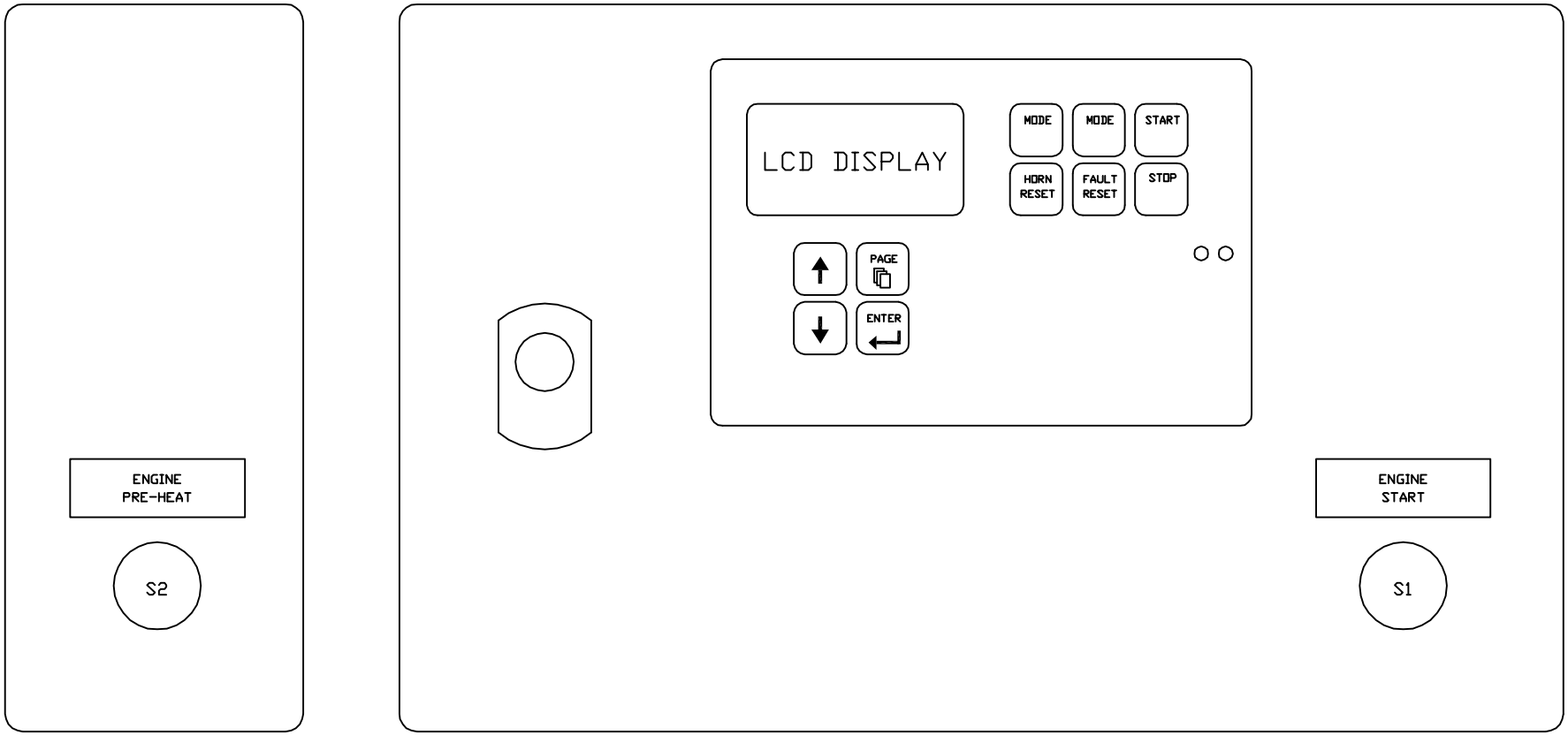

REV.	DATE	BY	DETAILS	ECO
4	07/01/10	AC	UPDATED	
3	28/04/09	SL	AS BUILT - STANDARD	
0	23/10/08	SL	FIRST DRAFT	

NOTES: NOT TO SCALE

DRAWING TITLE: ELECTRICAL SCHEMATICS

MACHINE TYPE: CH1700 CAT C4.4 MG

THE INFORMATION HEREON IS THE PROPERTY OF TEREX CORPORATION AND/OR ITS SUBSIDIARIES. WITHOUT WRITTEN PERMISSION, ANY COPYING, TRANSMITTAL TO OTHERS, AND ANY USE EXCEPT THAT FOR WHICH IT IS LOANED, IS PROHIBITED.

POWERSCREEN
POWERSCREEN INTERNATIONAL DISTRIBUTION LTD
200 COOLDARAS ROAD, DUNGANNON,
CO TYRONE, N IRELAND
TEL 02887 749711 FAX 02887 749759

ECO

POWERSCREEN ELECTRICAL DEPARTMENT

SHEET 1 OF 8

PRD-1236

REV 0

A3

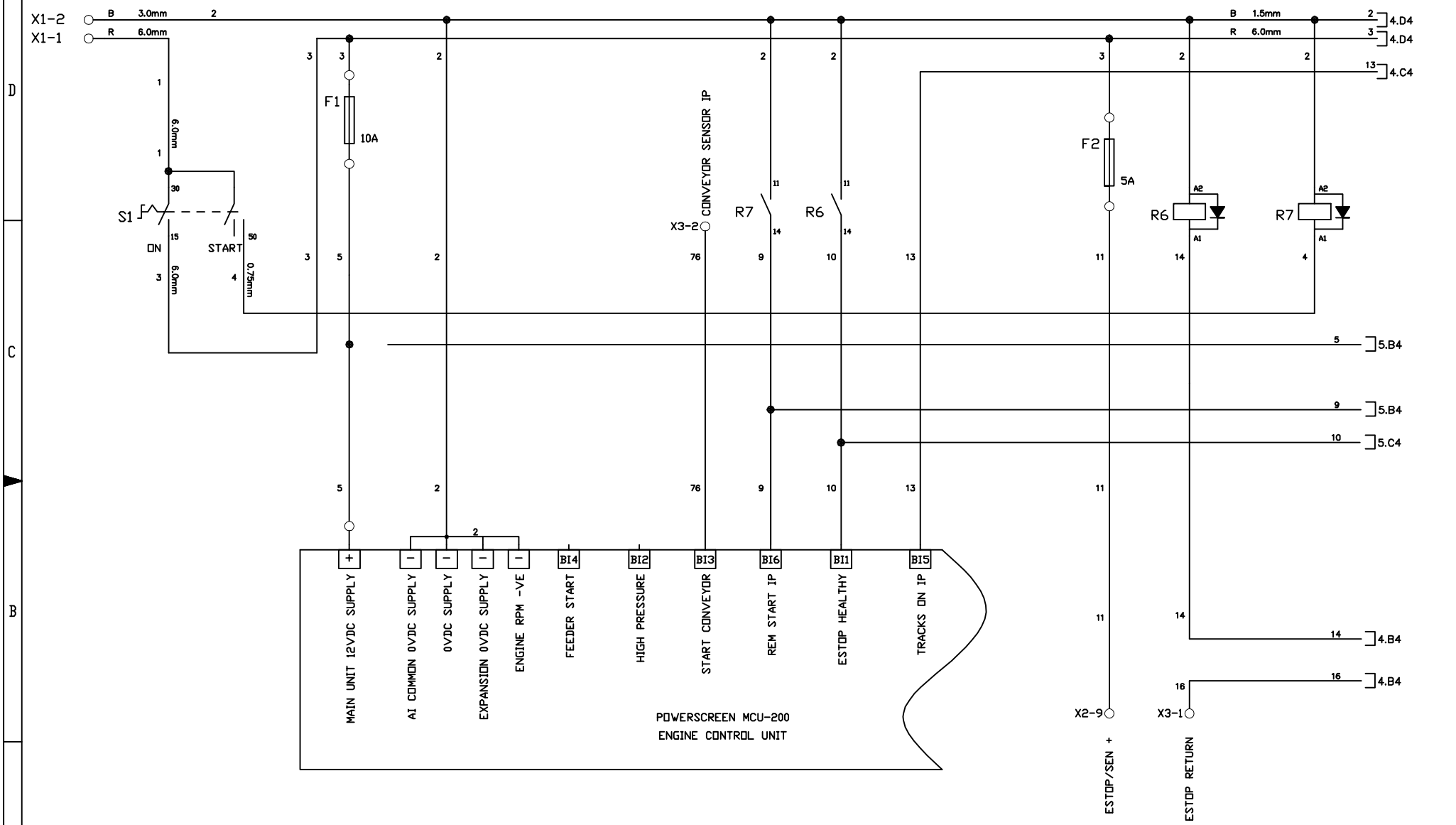

REV.	DATE	BY	DETAILS	ECO
4	07/01/10	AC	UPDATED	
3	28/04/09	SL	AS BUILT - STANDARD	
0	23/10/08	SL	FIRST DRAFT	

NOTES
NOT TO SCALE

DRAWING TITLE
ELECTRICAL SCHEMATICS

MACHINE TYPE
CH1700 CAT C4.4 MG

THE INFORMATION HEREON IS THE PROPERTY OF TEREX CORPORATION AND/OR ITS SUBSIDIARIES. WITHOUT WRITTEN PERMISSION, ANY COPYING, TRANSMITTAL TO OTHERS, AND ANY USE EXCEPT THAT FOR WHICH IT IS LOANED, IS PROHIBITED.

POWERSCREEN INTERNATIONAL DISTRIBUTION LTD
20 COOLDUAD ROAD, DUNGANNON,
CO TYRONE, N. IRELAND
TEL: 02887 767611 FAX: 02887 745569

ECO

POWERSCREEN ELECTRICAL DEPARTMENT

SHEET 2 OF 8

PRD-1236

REV 0

A3

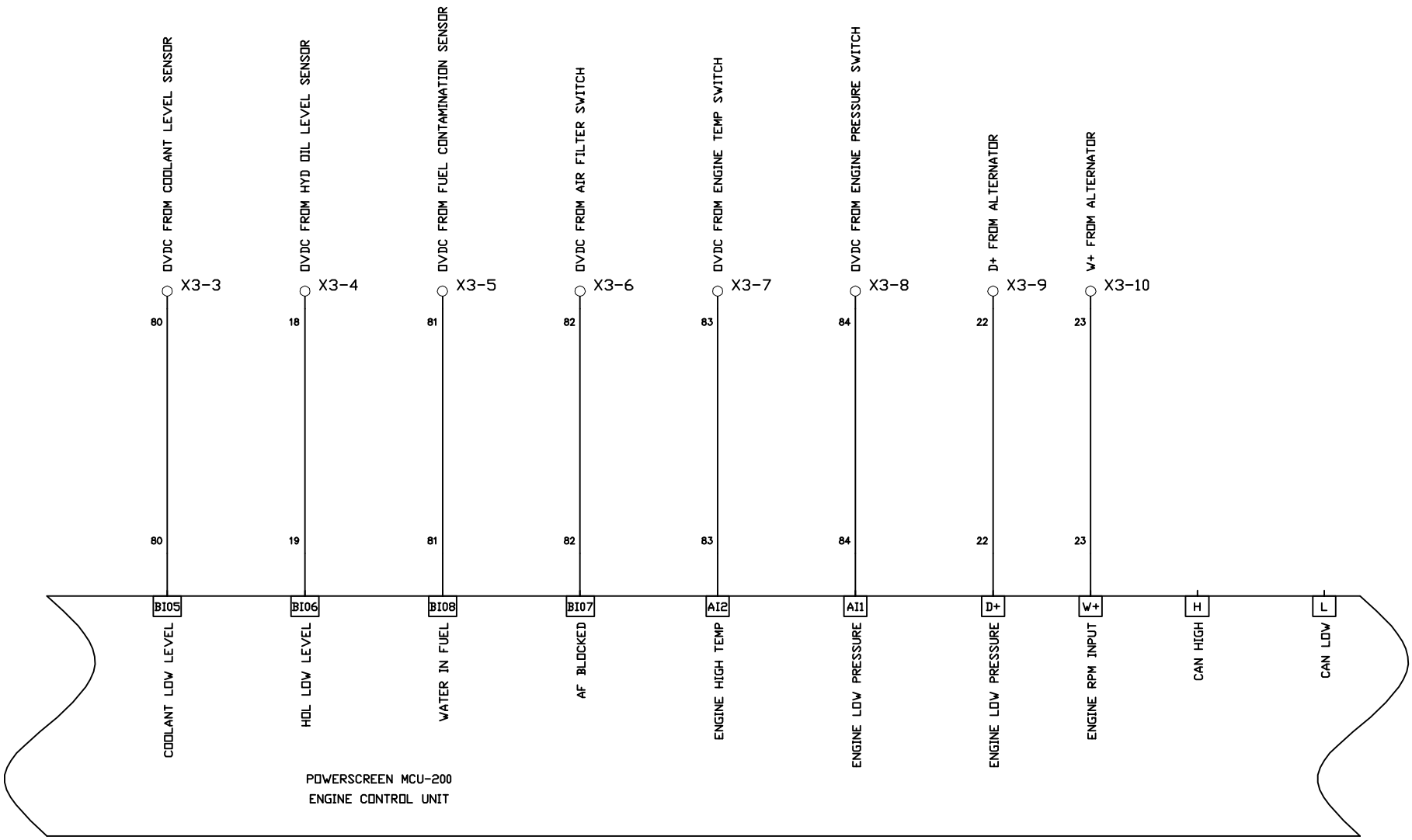

REV.	DATE	BY	DETAILS	ECO
4	07/01/10	AC	UPDATED	
3	28/04/09	SL	AS BUILT - STANDARD	
0	23/10/08	SL	FIRST DRAFT	

NOTES: NOT TO SCALE

DRAWING TITLE: ELECTRICAL SCHEMATICS

MACHINE TYPE: CH1700 CAT C4.4 MG

THE INFORMATION HEREON IS THE PROPERTY OF TEREX CORPORATION AND/OR ITS SUBSIDIARIES. WITHOUT WRITTEN PERMISSION, ANY COPYING, TRANSMITTAL TO OTHERS, AND ANY USE EXCEPT THAT FOR WHICH IT IS LOANED, IS PROHIBITED.

POWERSCREEN
POWERSCREEN INTERNATIONAL DISTRIBUTION LTD
20 CHALLENGE ROAD, DANGANNON,
CO. TYRONE, N. IRELAND
TEL: 02887 767171 FAX: 02887 765509

ECO

POWERSCREEN ELECTRICAL DEPARTMENT

SHEET 3 OF 8

PRD-1236 | REV 0 | A3

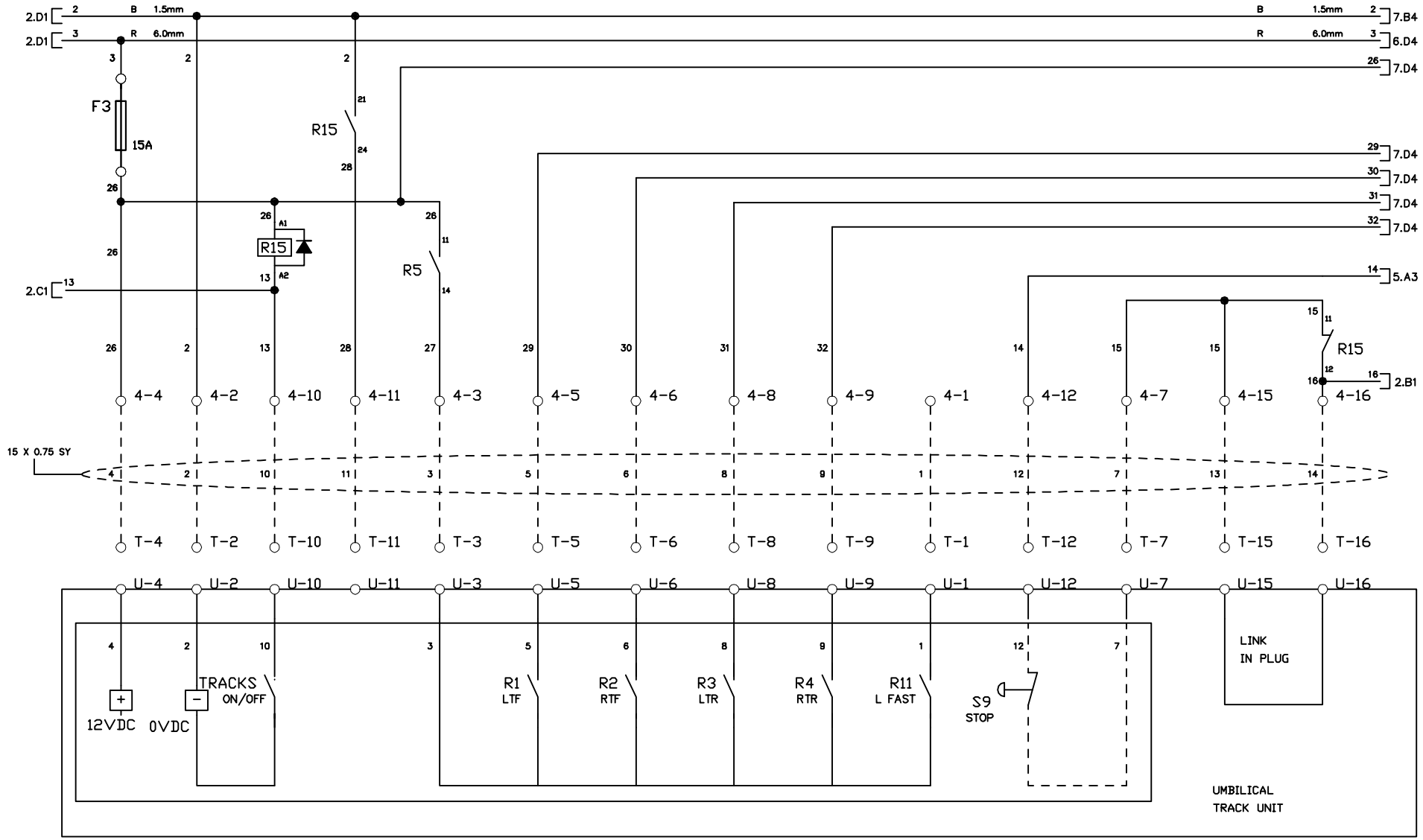

REV.	DATE	BY	DETAILS	ECO
4	07/01/10	AC	UPDATED	
3	28/04/09	SL	AS BUILT - STANDARD	
0	23/10/08	SL	FIRST DRAFT	

NOTES
NOT TO SCALE

DRAWING TITLE
ELECTRICAL SCHEMATICS

MACHINE TYPE
CH1700 CAT C4.4 MG

THE INFORMATION HEREON IS THE PROPERTY OF TEREX CORPORATION AND/OR ITS SUBSIDIARIES. WITHOUT WRITTEN PERMISSION, ANY COPYING, TRANSMITTAL TO OTHERS, AND ANY USE EXCEPT THAT FOR WHICH IT IS LOANED, IS PROHIBITED.

POWERSCREEN INTERNATIONAL DISTRIBUTION LTD
120 CHAILEARD ROAD, DUNGANNON,
CO. TYRONE, N. IRELAND
TEL: 02887 767201 FAX: 02887 745569

ECO

POWERSCREEN ELECTRICAL DEPARTMENT

SHEET 4A OF 8

PRD-1236

REV 0

A3

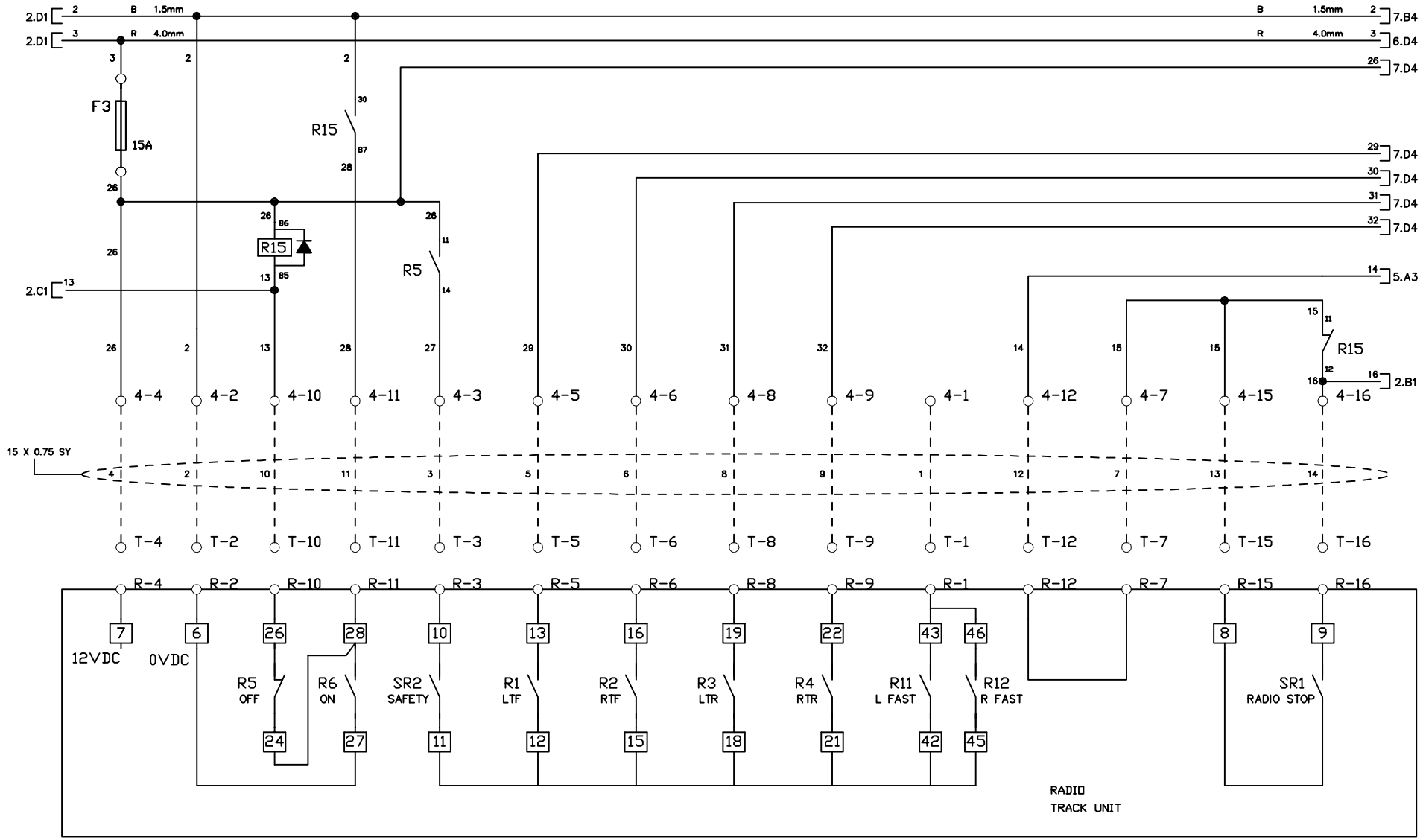

REV.	DATE	BY	DETAILS	ECO
4	07/01/10	AC	UPDATED	
3	28/04/09	SL	AS BUILT - STANDARD	
0	23/10/08	SL	FIRST DRAFT	

NOTES: NOT TO SCALE

DRAWING TITLE: ELECTRICAL SCHEMATICS

MACHINE TYPE: CH1700 CAT C4.4 MG

THE INFORMATION HEREON IS THE PROPERTY OF TEREX CORPORATION AND/OR ITS SUBSIDIARIES. WITHOUT WRITTEN PERMISSION, ANY COPYING, TRANSMITTAL TO OTHERS, AND ANY USE EXCEPT THAT FOR WHICH IT IS LOANED, IS PROHIBITED.

POWERSCREEN INTERNATIONAL DISTRIBUTION LTD
209 COOLDUFF ROAD, DUNGANNON,
CO. TYRONE, N. IRELAND
TEL: 02887 767201 FAX: 02887 745569

ECO

POWERSCREEN ELECTRICAL DEPARTMENT

SHEET 4B OF 8

PRD-1236

REV 0

A3

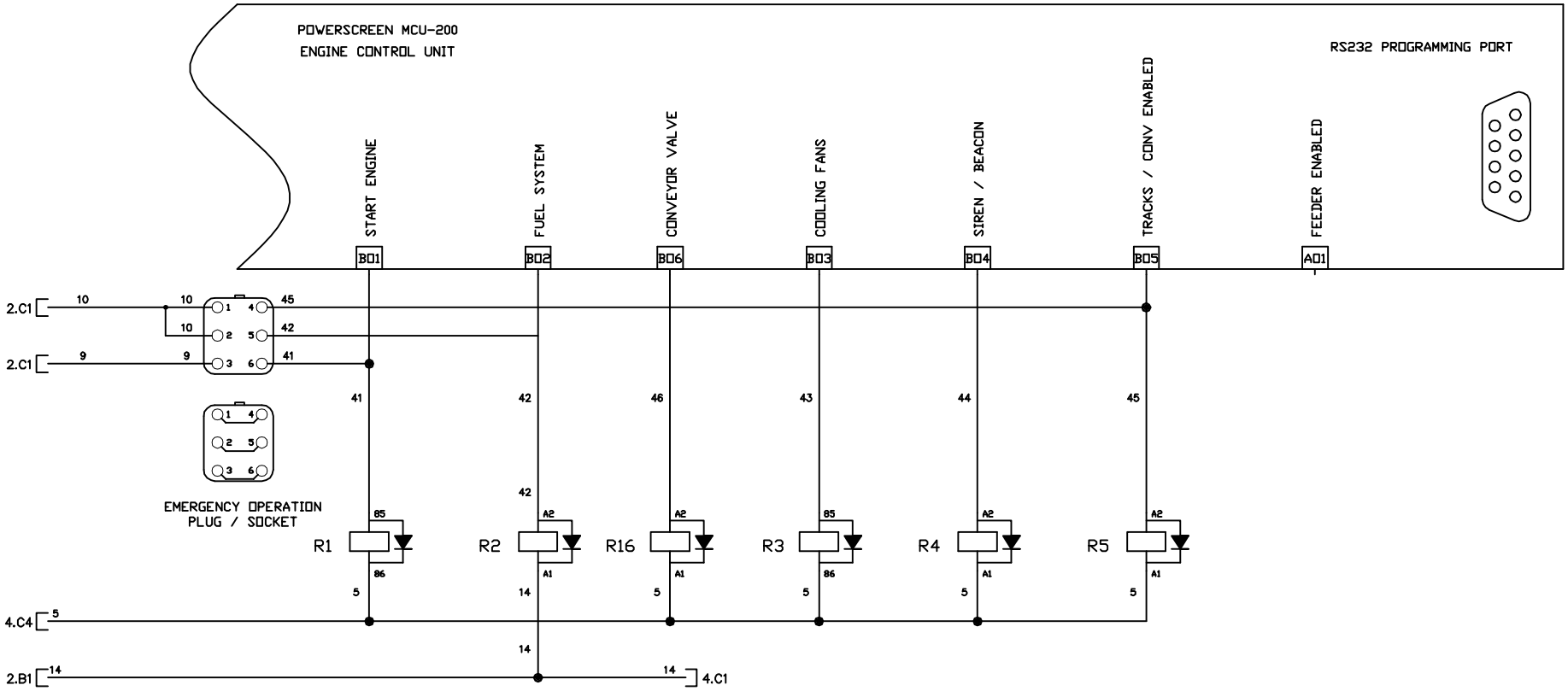

REV.	DATE	BY	DETAILS	ECO
4	07/01/10	AC	UPDATED	
3	28/04/09	SL	AS BUILT - STANDARD	
0	23/10/08	SL	FIRST DRAFT	

NOTES: NOT TO SCALE

DRAWING TITLE: ELECTRICAL SCHEMATICS

MACHINE TYPE: CH1700 CAT C4.4 MG

THE INFORMATION HEREON IS THE PROPERTY OF TEREX CORPORATION AND/OR ITS SUBSIDIARIES. WITHOUT WRITTEN PERMISSION, ANY COPYING, TRANSMITTAL TO OTHERS, AND ANY USE EXCEPT THAT FOR WHICH IT IS LOANED, IS PROHIBITED.

POWERSCREEN INTERNATIONAL DISTRIBUTION LTD
20 COALISLAND ROAD, DUNGANNON,
CO. TYRONE, N. IRELAND
TEL: 02887 740741 FAX: 02887 745569

ECO

POWERSCREEN ELECTRICAL DEPARTMENT

SHEET 5 OF 8

PRD-1236 | REV 0 | A3

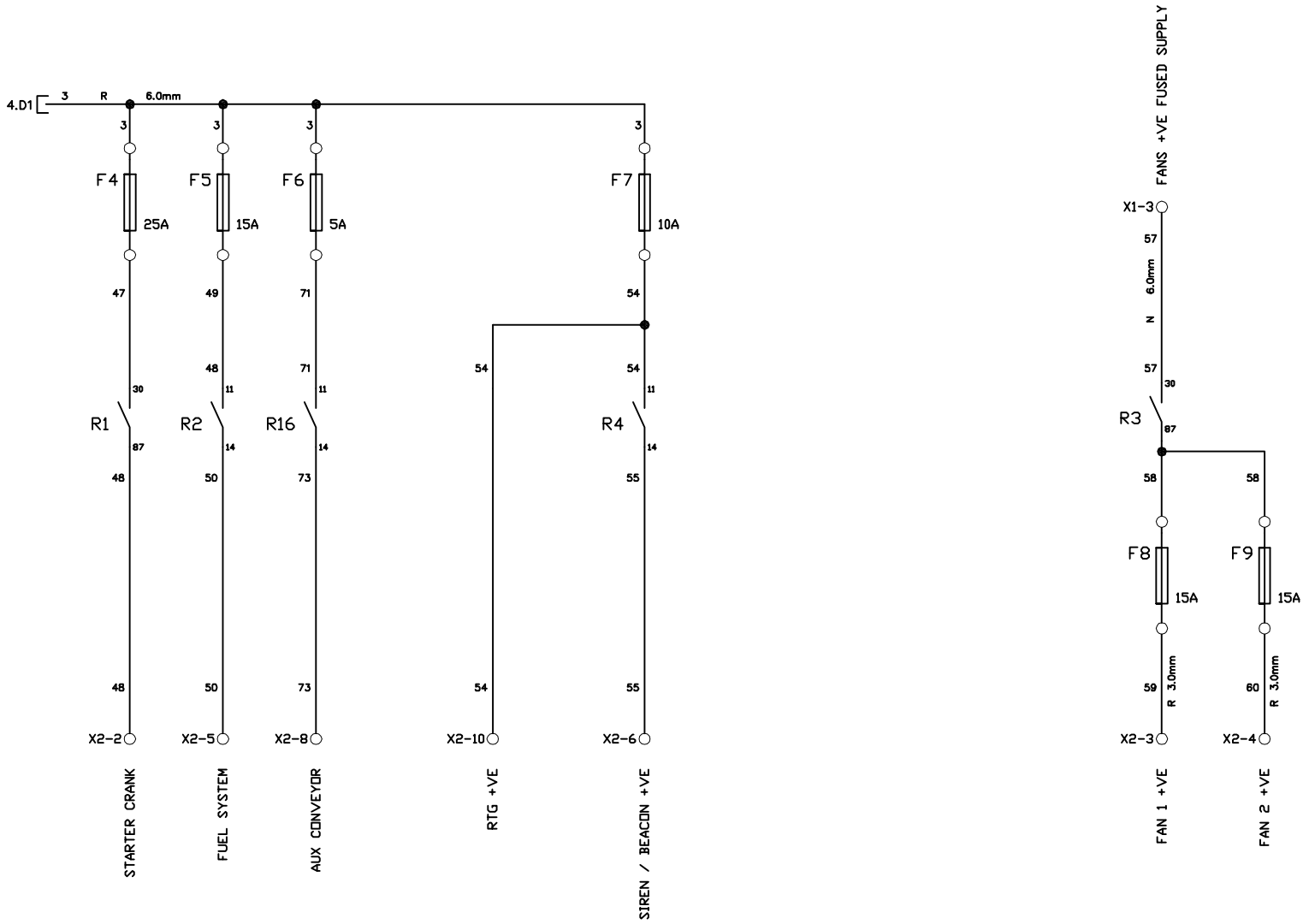

REV.	DATE	BY	DETAILS	ECO
4	07/01/10	AC	UPDATED	
3	28/04/09	SL	AS BUILT - STANDARD	
0	23/10/08	SL	FIRST DRAFT	

NOTES: NOT TO SCALE

DRAWING TITLE: ELECTRICAL SCHEMATICS

MACHINE TYPE: CH1700 CAT C4.4 MG

THE INFORMATION HEREON IS THE PROPERTY OF TEREX CORPORATION AND/OR ITS SUBSIDIARIES. WITHOUT WRITTEN PERMISSION, ANY COPYING, TRANSMITTAL TO OTHERS, AND ANY USE EXCEPT THAT FOR WHICH IT IS LOANED, IS PROHIBITED.

POWERSCREEN INTERNATIONAL DISTRIBUTION LTD
20 COOLDUAD ROAD, DUNGANNON,
CO TYRONE, N. IRELAND
TEL: 02887 767201 FAX: 02887 745569

ECO

POWERSCREEN ELECTRICAL DEPARTMENT

SHEET 6 OF 8

PRD-1236 | REV 0 | A3

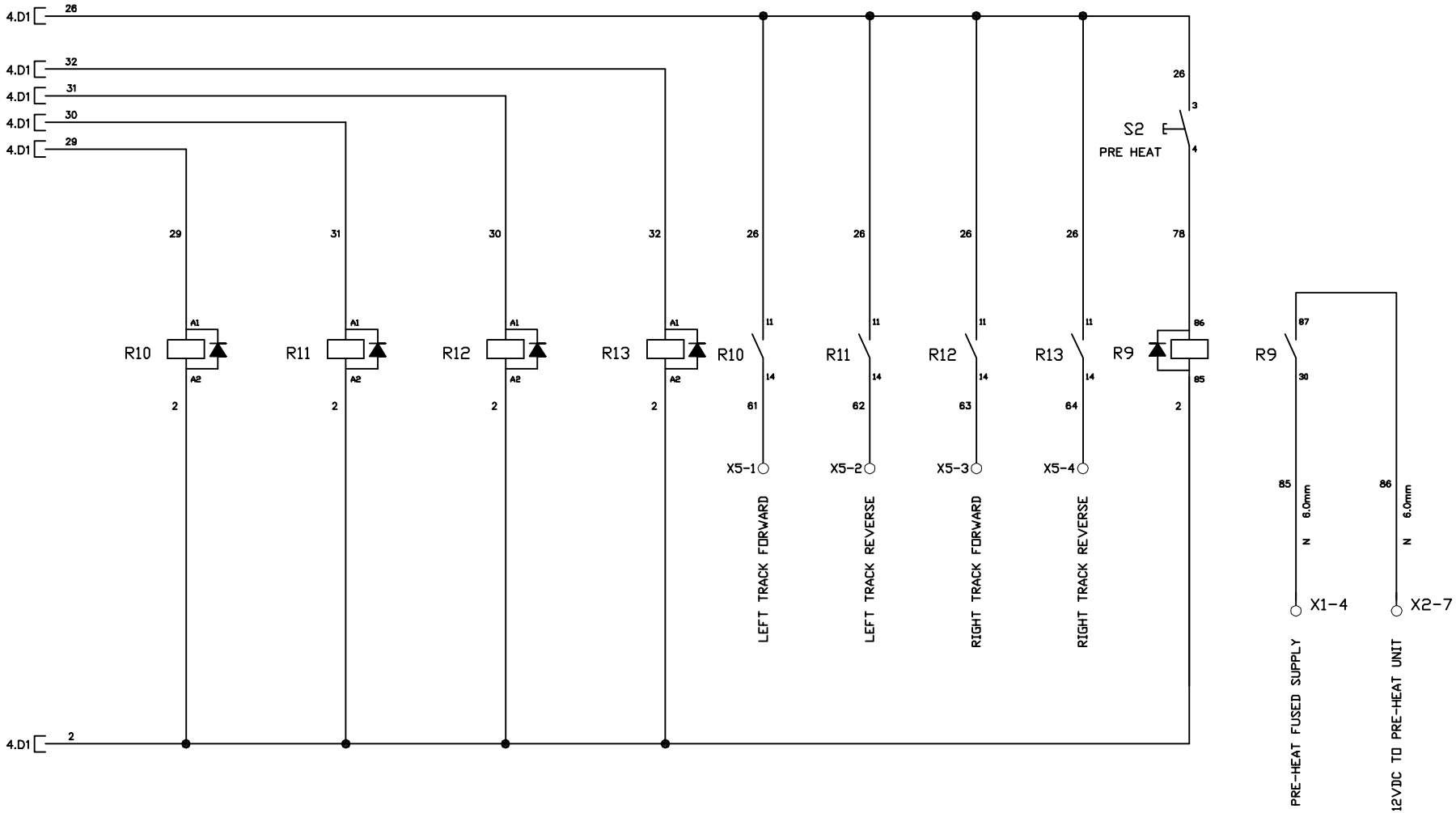

REV.	DATE	BY	DETAILS	ECO
4	07/01/10	AC	UPDATED	
3	28/04/09	SL	AS BUILT - STANDARD	
0	23/10/08	SL	FIRST DRAFT	

NOTES
NOT TO SCALE

DRAWING TITLE
ELECTRICAL SCHEMATICS

MACHINE TYPE
CH1700 CAT C4.4 MG

THE INFORMATION HEREON IS THE PROPERTY OF TEREX CORPORATION AND/OR ITS SUBSIDIARIES. WITHOUT WRITTEN PERMISSION, ANY COPYING, TRANSMITTAL TO OTHERS, AND ANY USE EXCEPT THAT FOR WHICH IT IS LOANED, IS PROHIBITED.

POWERSCREEN INTERNATIONAL DISTRIBUTION LTD
20 CAULDLAND ROAD, DUNGANNON,
CO. TYRONE, N. IRELAND
TEL: 02887 767281 FAX: 02887 745569

ECO

POWERSCREEN ELECTRICAL DEPARTMENT

SHEET 7 OF 8

PRD-1236

REV 0

A3

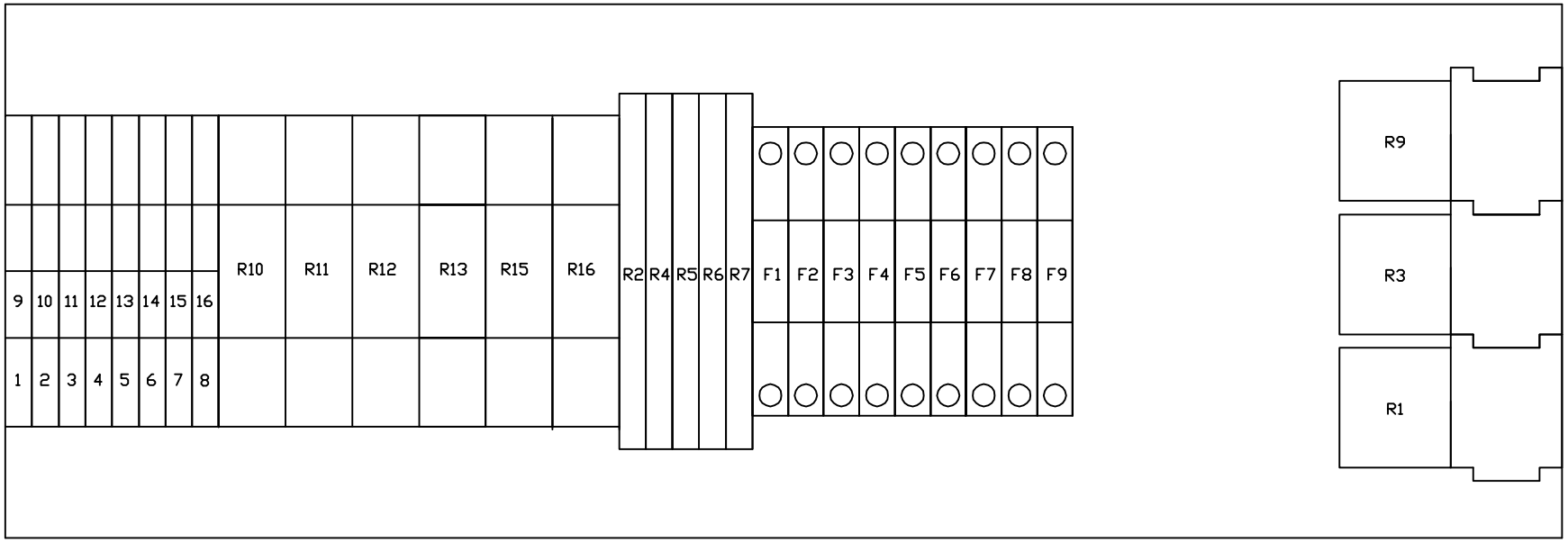

TAG	DESCRIPTION	RATING
F1	CONTROL CIRCUIT	10A
F2	SENSORS SUPPLY	5A
F3	TRACKS SUPPLY	15A
F4	STARTER SOLENOID	30A
F5	FUEL SYSTEM	10A
F6	AUX CONVEYOR	5A
F7	SIREN/BEACON/RTG	10A
F8	COOLING FAN 1	15A
F9	COOLING FAN 2	15A

TAG	DESCRIPTION	RATING
R1	STARTER	70A
R2	FUEL SYSTEM	6A
R3	COOLING FANS	40A
R4	SIREN / BEACON	6A
R5	TRACKS ENABLED	6A
R6	ESTOP	6A
R7	KEY START	6A
R9	PRE-HEAT RELAY	70A

TAG	DESCRIPTION	RATING
R10	LEFT TRACK FORWARD	8A
R11	LEFT TRACK REVERSE	8A
R12	RIGHT TRACK FORWARD	8A
R13	RIGHT TRACK REVERSE	8A
R15	RADIO LATCH RELAY	8A
R16	AUX CONV RELAY 1	8A

REV.	DATE	BY	DETAILS	ECO
4	07/01/10	AC	UPDATED	
3	28/04/09	SL	AS BUILT - STANDARD	
0	23/10/08	SL	FIRST DRAFT	

NOTES
NOT TO SCALE

DRAWING TITLE
ELECTRICAL SCHEMATICS

MACHINE TYPE
CH1700 CAT C4.4 MG

THE INFORMATION HEREIN IS THE PROPERTY OF TEREX CORPORATION AND/OR ITS SUBSIDIARIES. WITHOUT WRITTEN PERMISSION, ANY COPYING, TRANSMITTAL TO OTHERS, AND ANY USE EXCEPT THAT FOR WHICH IT IS LOANED, IS PROHIBITED.

POWERSCREEN INTERNATIONAL DISTRIBUTION LTD
209 COOLDUAD ROAD, DUNGANNON,
CO. TYRONE, N. IRELAND
TEL: 02887 767281 FAX: 02887 745569

ECO

POWERSCREEN ELECTRICAL DEPARTMENT

SHEET 8 OF 8

PRD-1236

REV 0

A3

(4) Tier 4 Schematics

Intentionally Left Blank

For this document and the object represented in that we reserve all rights according to DIN 34.
Duplication announcement onto third party or utilization of his contents are without forbidden to our.

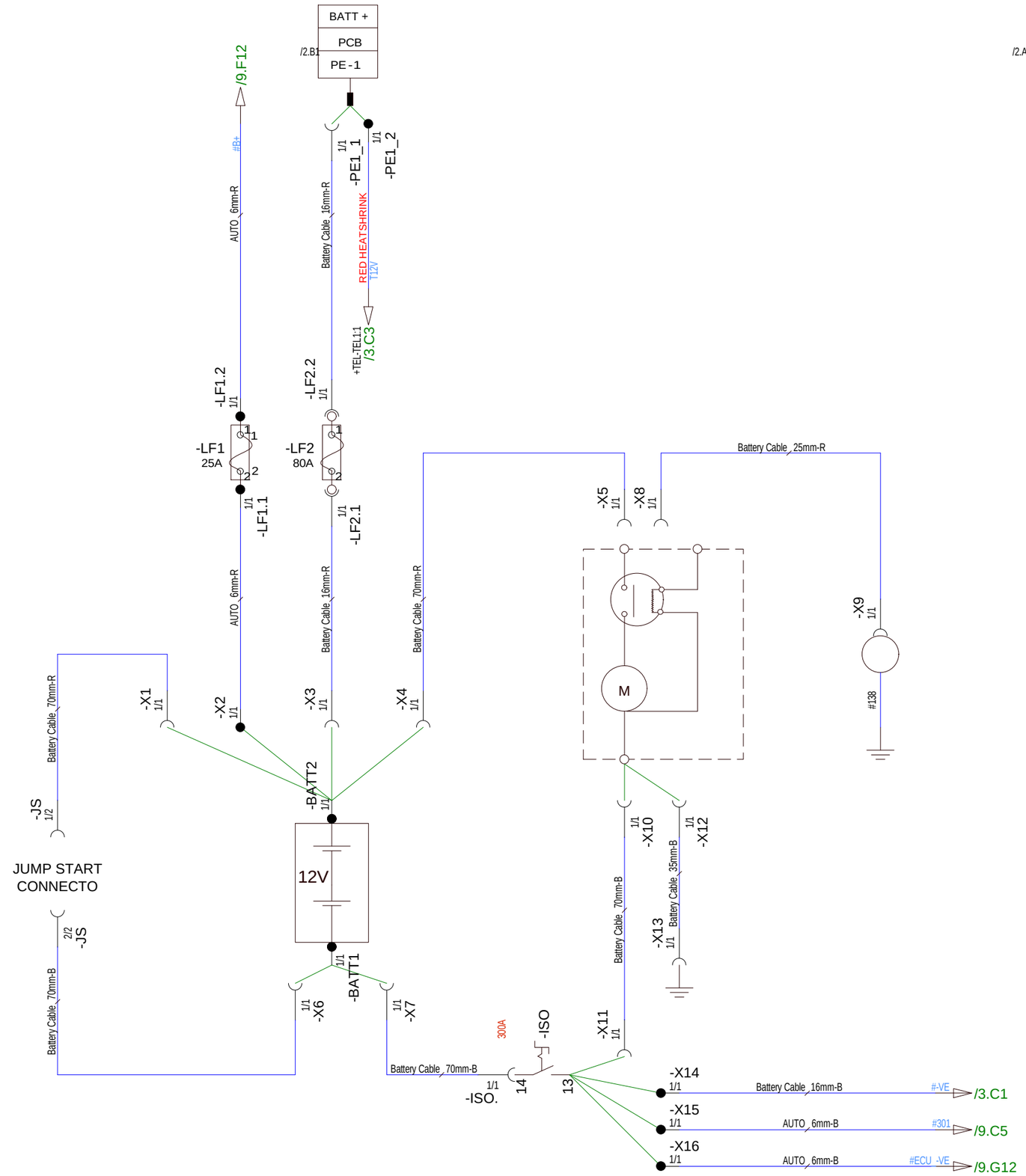

Changing drawing only in the E3!										
	3						Date	Name	TEREX	Type Standard P.-Nr.:
	2		Telematics Wiring	16.01.17	AJC	User				Description: Electrical Kit POWER UNIT
	1		Cable Colours	13.12.16	AJC					Assignment: Location +PU
	0		First Draft	28.11.16	AJC	Proved				Drawing number 60552902.2
	Revision	ECO	Revision text	Date	Name					Sheet 1 No. 16 Sh.

PCB SCHEMATIC

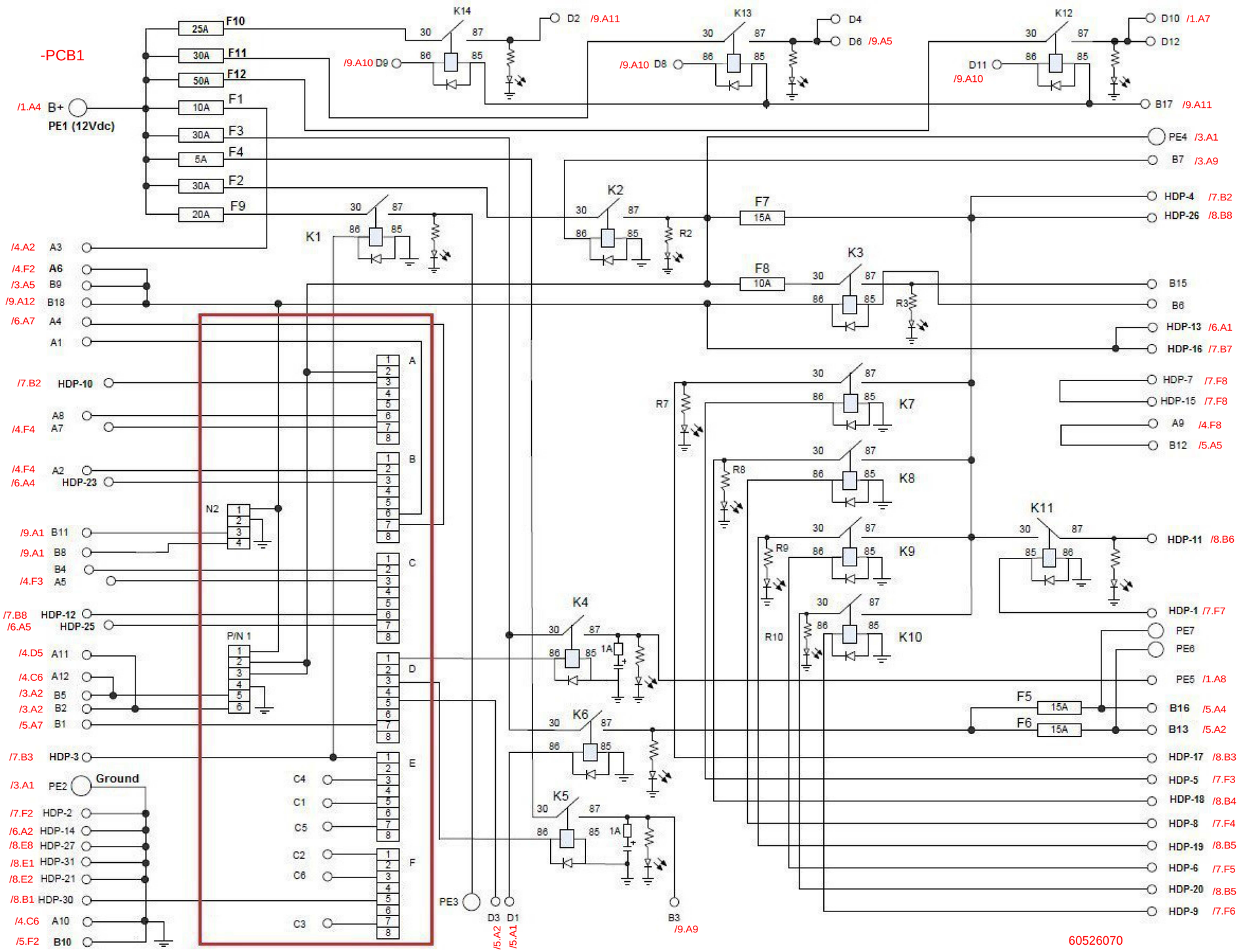

PCB SHEET REFERENCE

-PCB1

/1.A4	B+ (12VDC)	GND (-VE)	/3.A1
	A1	HDP-1	/7.E7
/4.F4	A2	HDP-2	/7.E2
/4.A2	A3	HDP-3	/7.B3
/6.B7	A4	HDP-4	/7.B2
/4.F3	A5	HDP-5	/7.E3
/4.F2	A6	HDP-6	/7.E5
/4.F4	A7	HDP-7	/7.E8
	A8	HDP-8	/7.E4
/4.F8	A9	HDP-9	/7.E6
/4.C6	A10	HDP-10	/7.B2
/4.D5	A11	HDP-11	/8.B6
/4.D6	A12	HDP-12	/7.B8
		HDP-13	/6.B2
/5.A7	B1	HDP-14	/6.B2
/3.A3	B2	HDP-15	/7.E7
/9.A9	B3	HDP-16	/7.B7
	B4	HDP-17	/8.B3
/3.A2	B5	HDP-18	/8.B4
	B6	HDP-19	/8.B5
/3.A9	B7	HDP-20	/8.B6
/9.A1	B8	HDP-21	/8.E2
/3.A5	B9	HDP-22	Not Used
/5.E2	B10	HDP-23	/6.B4
/9.A1	B11	HDP-24	Not Used
/5.A6	B12	HDP-25	/6.B5
/5.A3	B13	HDP-26	/8.B8
Not Used	B14	HDP-27	/8.E8
	B15	HDP-28	Not Used
/5.A4	B16	HDP-29	Not Used
/9.A11	B17	HDP-30	/8.B1
/9.A12	B18	HDP-31	/8.E1
	C1	(track ltg) PE3	
	C2		
	C3	(Sw Pwr) PE4	/3.A1
	C4		
	C5	(Starter) PE5	/1.A8
	C6		
/5.A2	D1	(Fan 1) PE6	
/9.A11	D2		
/5.A2	D3	(Fan 2) PE7	
	D4		
Not Used	D5		
/9.A5	D6		
Not Used	D7		
/9.A10	D8		
/9.A11	D9		
/1.A7	D10		
/9.A10	D11		
	D12		

60526070

For this document and the object represented in that we reserve all rights according to DIN 34.
Duplication announcement onto third party or utilization of his contents are without forbidden to our.

Changing drawing only in the E3!							Date	Name		Type Standard	Description: Electrical Kit	Assignment
	3								TEREX	P.-Nr.:	POWER UNIT	Location +PU
	2		Telematics Wiring	16.01.17	AJC	User						
	1		Cable Colours	13.12.16	AJC						Drawing number 60552902.2	Sheet 2
	0		First Draft	28.11.16	AJC	Proved						No. 16 Sh.
	Revision	ECO	Revision text	Date	Name							

For this document and the object represented in that we reserve all rights according to DIN 34.
Duplication announcement onto third party or utilization of his contents are without forbidden to our.

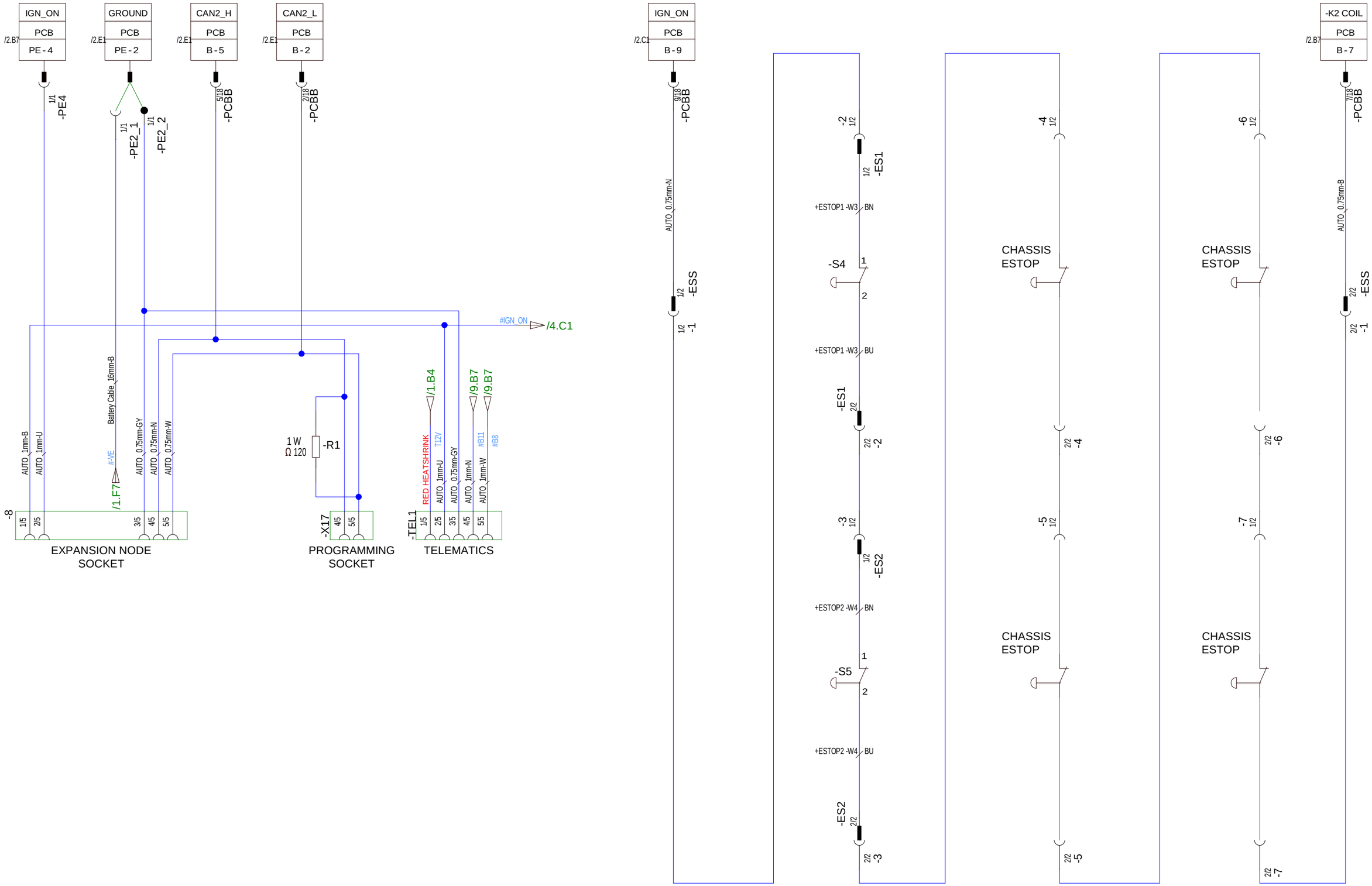

Changing drawing only in the E3!						Date	Name
	3						
	2		Telematics Wiring	16.01.17	AJC		
	1		Cable Colours	13.12.16	AJC	User	
	0		First Draft	28.11.16	AJC		
	Revision	ECO	Revision text	Date	Name	Proved	

TEREX

Type Standard P.-Nr.:	Description: Electrical Kit POWER UNIT	Assignment Location +PU
	Drawing number 60552902.2	Sheet 3 No. 16 Sh.

For this document and the object represented in that we reserve all rights according to DIN 34.
Duplication announcement onto third party or utilization of his contents are without forbidden to our.

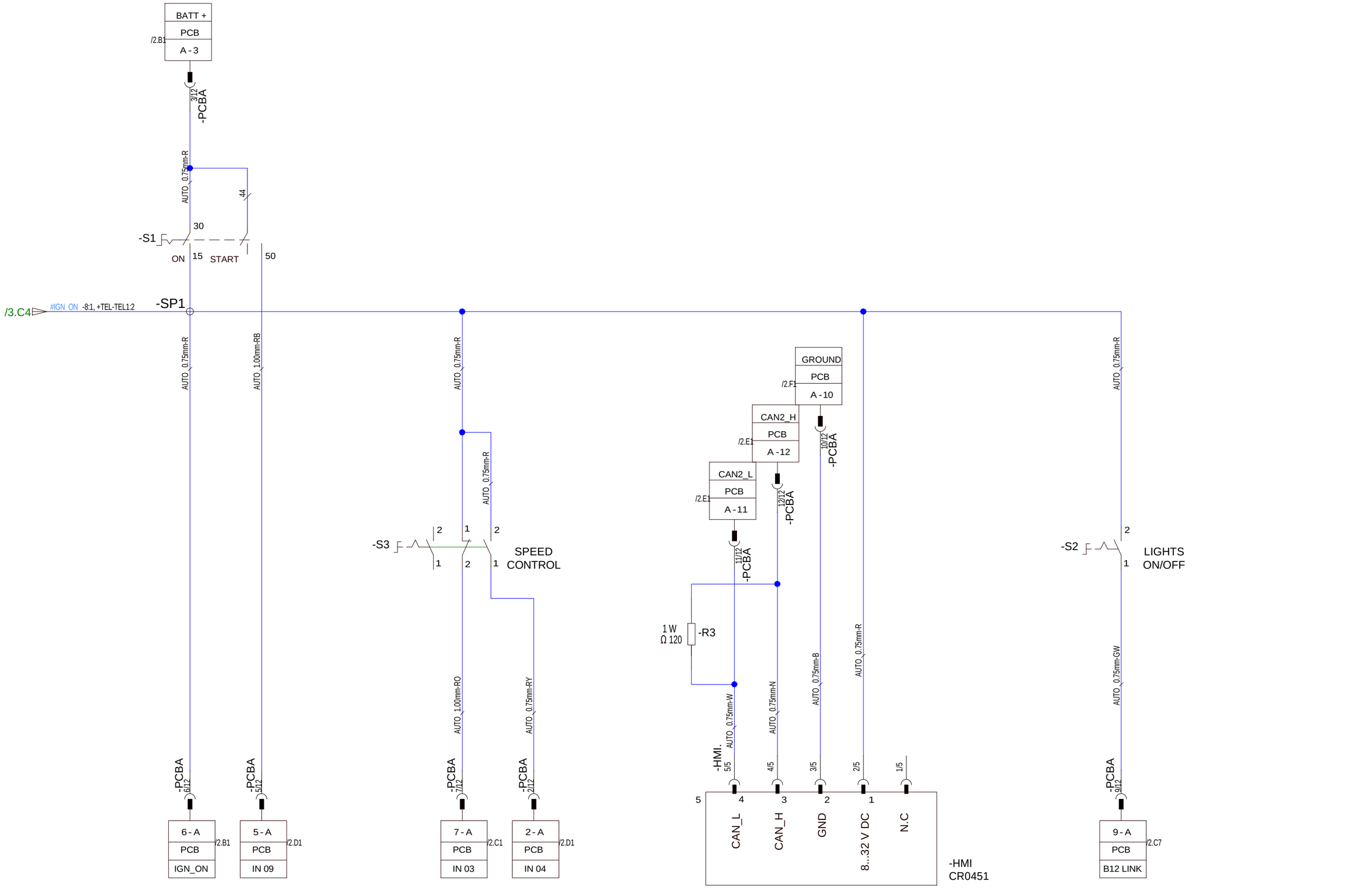

Changing drawing only in the E3!										
	3							Date	Name	
	2		Telematics Wiring	16.01.17	AJC					
	1		Cable Colours	13.12.16	AJC		User			
	0		First Draft	28.11.16	AJC		Proved			
	Revision	ECO	Revision text	Date	Name					

TEREX

Type Standard P.-Nr.:	Description: Electrical Kit POWER UNIT	Assignment Location +PU	
	Drawing number 60552902.2	Sheet 4 No. 16 Sh.	

For this document and the object represented in that we reserve all rights according to DIN 34.
Duplication announcement onto third party or utilization of his contents are without forbidden to our.

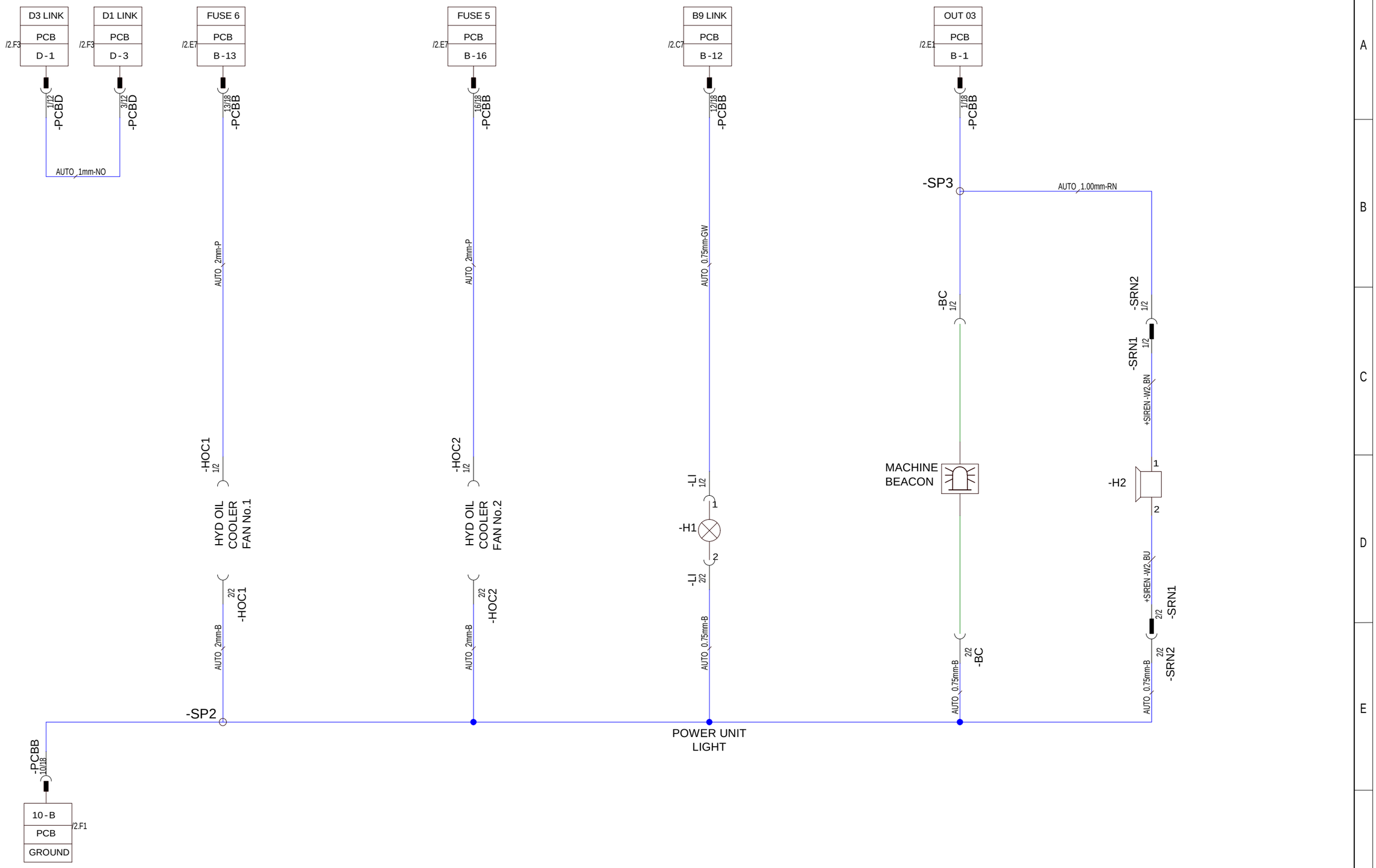

Changing drawing only in the E3!											
	3						Date	Name	TEREX	Type Standard P.-Nr.:	Description: Electrical Kit POWER UNIT	Assignment
	2		Telematics Wiring	16.01.17	AJC							Location +PU
	1		Cable Colours	13.12.16	AJC	User					Drawing number 60552902.2	Sheet 5
	0		First Draft	28.11.16	AJC							
	Revision	ECO	Revision text	Date	Name	Proved						No. 16 Sh.

For this document and the object represented in that we reserve all rights according to DIN 34.
Duplication announcement onto third party or utilization of his contents are without forbidden to our.

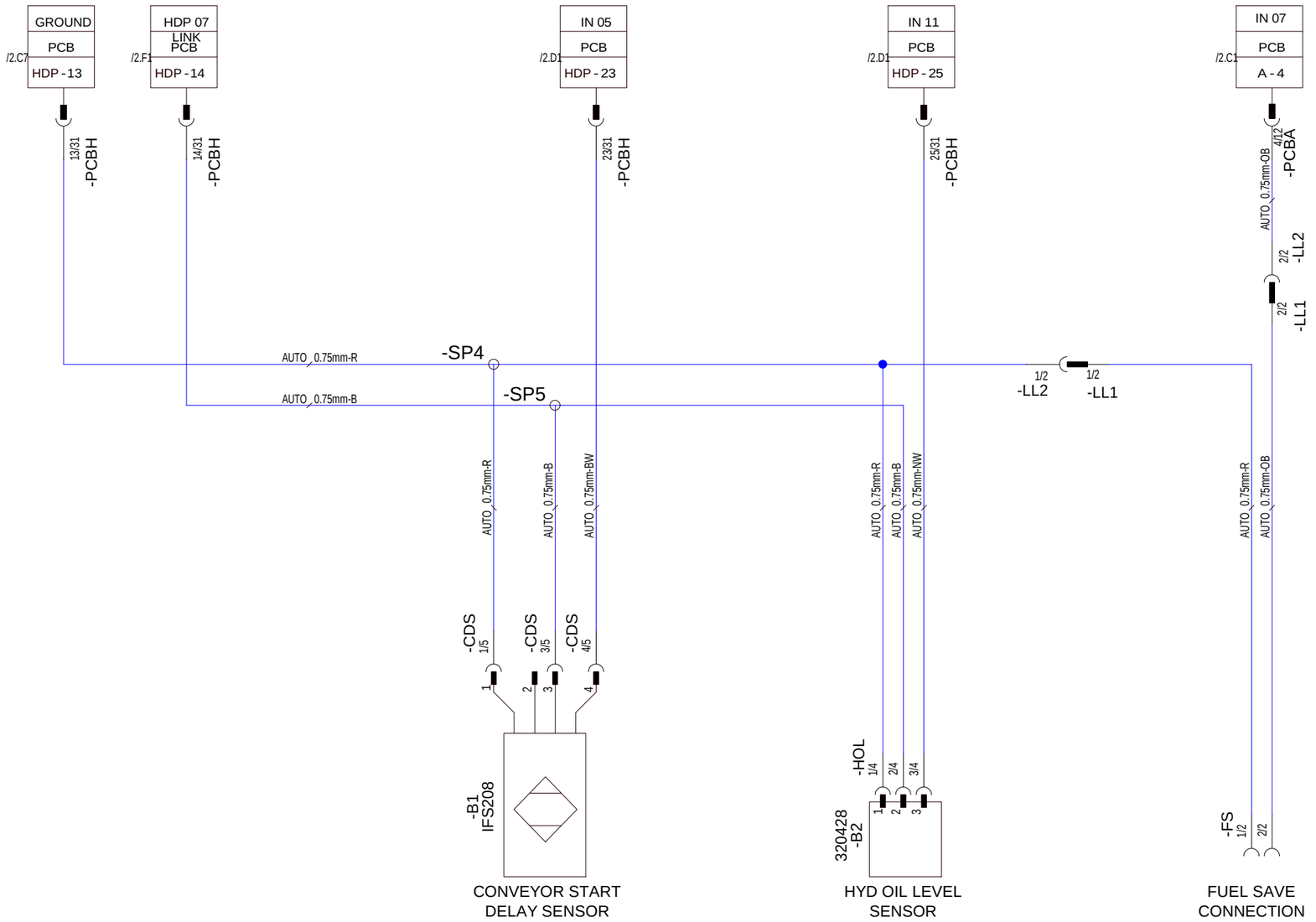

Changing drawing only in the E3!	Revision	ECO	Revision text	Date	Name
	3				
	2		Telematics Wiring	16.01.17	AJC
	1		Cable Colours	13.12.16	AJC
	0		First Draft	28.11.16	AJC

	Date	Name
User		
Proved		

TEREX

Type Standard
P.-Nr.:

Description: Electrical Kit
POWER UNIT

Drawing number
60552902.2

Assignment
Location +PU
Sheet 6
No. 16 Sh.

For this document and the object represented in that we reserve all rights according to DIN 34.
Duplication announcement onto third party or utilization of his contents are without forbidden to our.

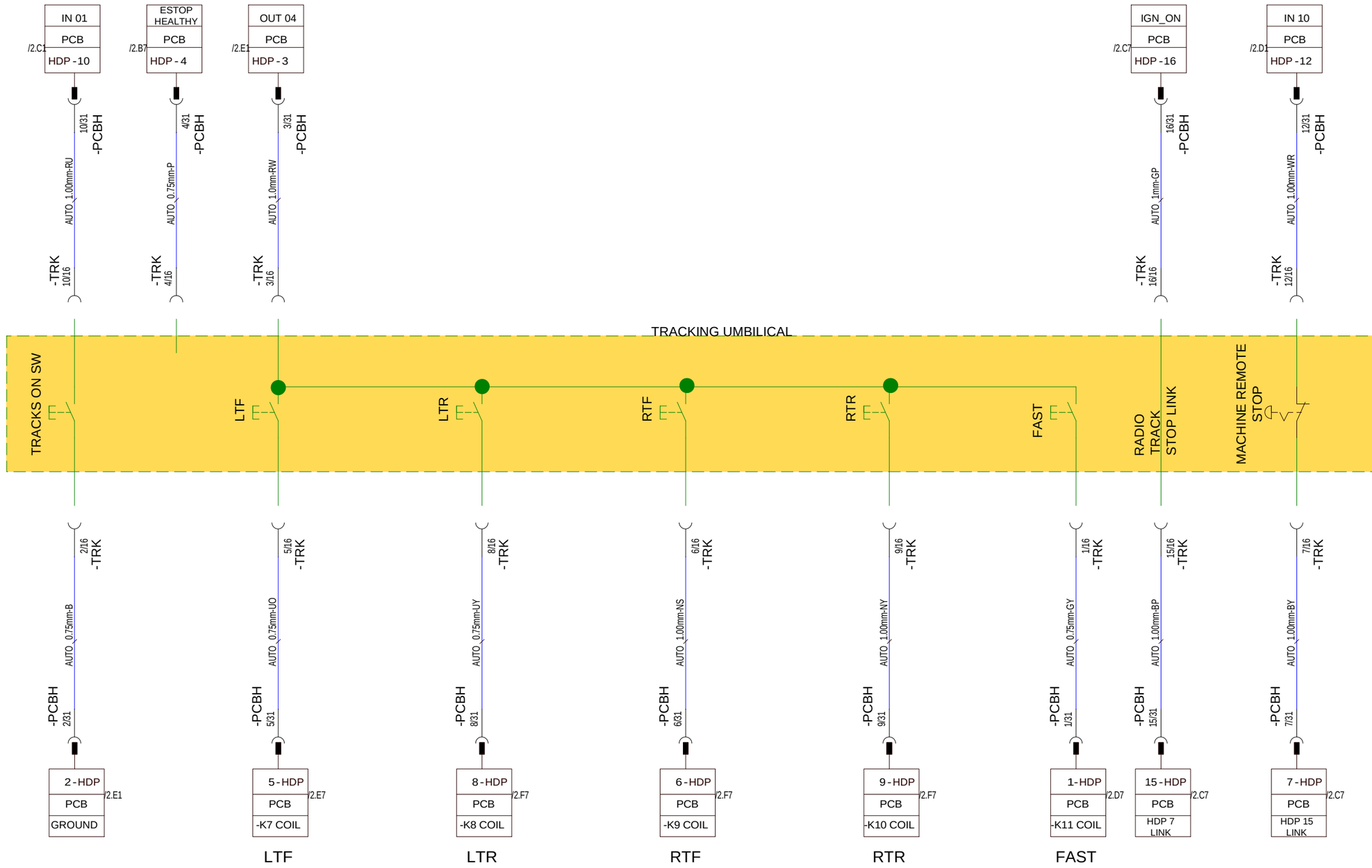

Changing drawing only in the E3!										
	3									
	2		Telematics Wiring	16.01.17	AJC					
	1		Cable Colours	13.12.16	AJC					
	0		First Draft	28.11.16	AJC					
	Revision	ECO	Revision text	Date	Name					

	Date	Name
User		
Proved		

TEREX

Type Standard P.-Nr.:	Description: Electrical Kit POWER UNIT	Assignment Location +PU
	Drawing number 60552902.2	Sheet 7 No. 16 Sh.

For this document and the object represented in that we reserve all rights according to DIN 34.
Duplication announcement onto third party or utilization of his contents are without forbidden to our.

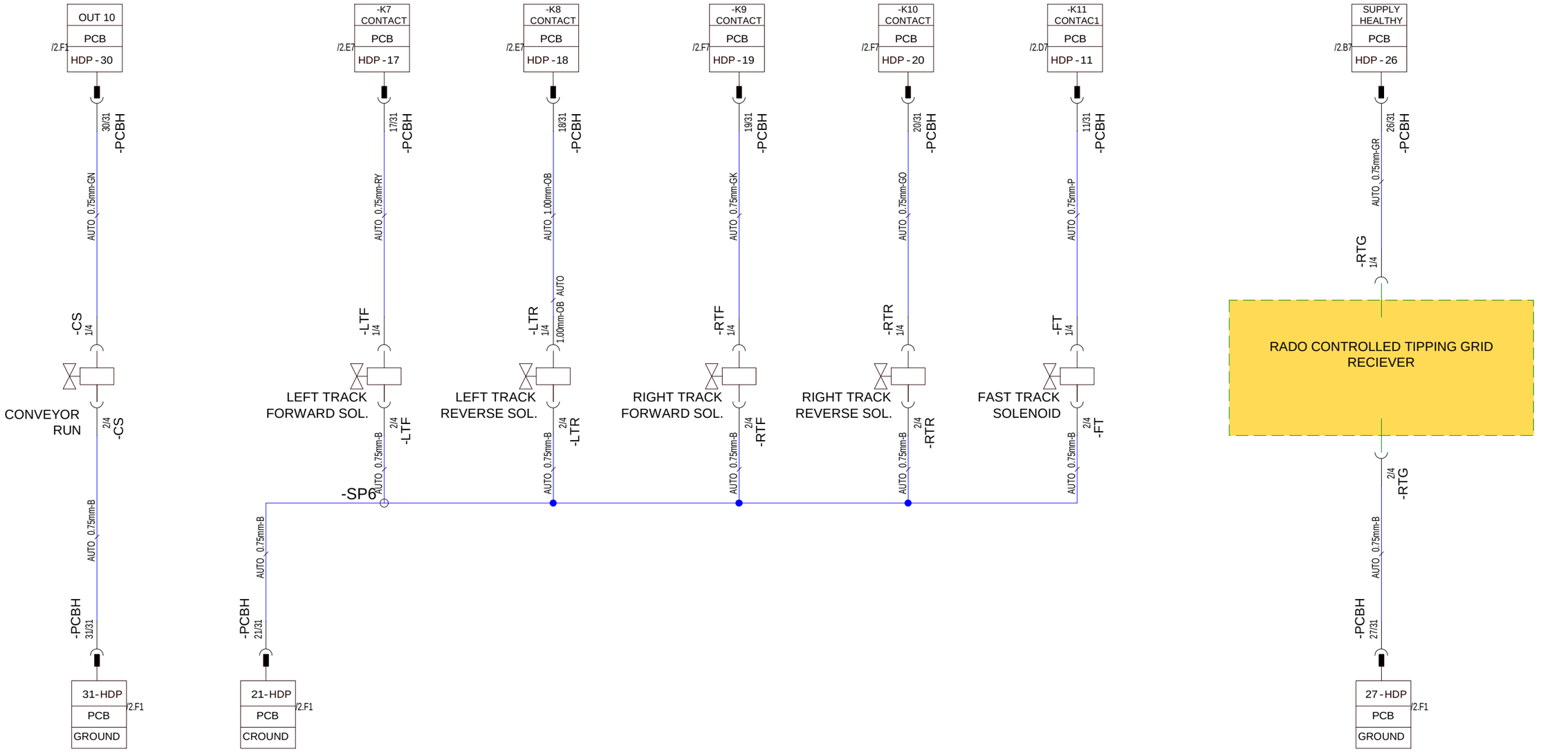

Changing drawing only in the E3!										
	3						Date	Name	TEREX	Type Standard P.-Nr.:
	2		Telematics Wiring	16.01.17	AJC					Description: Electrical Kit POWER UNIT
	1		Cable Colours	13.12.16	AJC	User				Drawing number 60552902.2
	0		First Draft	28.11.16	AJC	Proved				Assignment: Location +PU; Sheet 8; No. 16 Sh.
	Revision	ECO	Revision text	Date	Name					

For this document and the object represented in that we reserve all rights according to DIN 34.
Duplication announcement onto third party or utilization of this contents are without forbidden to our.

CAN1_L /2.D1 PCB B-8 — 8/8 -PCBB
CAN1_H /2.D1 PCB B-11 — 11/8 -PCBB
XNOX POWER RELAY -K13 CONTACT /2.A5 PCB D-6 — 6/12 -PCBD
IGNITION ON TO ECU -K5 CONTACT /2.F4 PCB B-3 — 3/8 -PCBB
XNOX POWER RELAY -K13 COIL /2.A4 PCB D-8 — 8/12 -PCBD
PREHEAT RELAY -K12 COIL /2.A6 PCB D-11 — 11/12 -PCBD
ELP RELAY -K14 COIL /2.A3 PCB D-9 — 9/12 -PCBD
RELAY GROUND /2.B7 PCB B-17 — 17/8 -PCBB
-K14 CONTACT /2.A4 PCB D-2 — 2/12 -PCBD
IGN_ON /2.C1 PCB B-18 — 18/8 -PCBB

AUTO_0.75mm-GU
AUTO_0.75mm-UY
#B11 /3.C4 +TEL-TEL1:4
#B8 /3.C4 +TEL-TEL1:5

-R2 120 Ω 1 W

TENNECO XNOX DCU

CAN LOW — 21/31 -XN1
CAN HIGH — 20/31 -XN1

BATT +VE — -XN1 1/31 — AUTO_0.75mm-R
BATT +VE — -XN1 2/31 — AUTO_0.75mm-R
BATT +VE — -XN1 3/31 — AUTO_0.75mm-R
BATT -VE — -XN1 5/31 — AUTO_0.75mm-B
BATT -VE — -XN1 6/31 — AUTO_0.75mm-B
BATT -VE — -XN1 7/31 — AUTO_0.75mm-B

AUTO_6mm-R — -SP7 — /1.F7 #201 -X151
AUTO_6mm-B — -SP8 — -TH1 TANK HEADER UNIT 4/4, 3/4, 2/4, 1/4

-R5 1 W Ω 120
AUTO_0.75mm-U — -SP11
AUTO_0.75mm-GY — -SP12

CAN C LOW — -XN1 23/31
CAN C HIGH — -XN1 22/31
SCR TEMP. — -XN1 8/31
DOC TEMP. — -XN1 9/31
DEF INJECTOR +VE — -XN1 11/31
DEF INJECTOR -VE — -XN1 12/31
XDRG 0V — -XN1 24/31

DVRP 2 — -XN1 13/31 — AUTO_1mm-GP — -HL1 1/2, 2/2 HEATED LINE 1
LINE 1 HEATER (SUCTION) — -XN1 14/31 — AUTO_0.75mm-BW
DVRP 3 — -XN1 15/31 — AUTO_0.75mm-K — -HL2 1/2, 2/2 HEATED LINE 2
LINE 2 HEATER (DELIVERY) — -XN1 16/31 — AUTO_0.75mm-OB
LINE 3 HEATER (DELIVERY) — -XN1 18/31 — AUTO_0.75mm-GW — -HL3 2/2, 1/2 HEATED LINE 3
DVRP 4 — -XN1 17/31 — AUTO_0.75mm-GR — -SP14 — -CDV 1/3, 3/3 COOLANT DIVERTER VALVE
TANK HEADER — -XN1 19/31 — AUTO_0.75mm-OG
IGNITION — -XN1 4/31 — AUTO_0.75mm-WO

ENGINE ECU

CAN HIGH — 25/70 -J1
CAN LOW — 26/70 -J1
NH3 SENSOR -VE — 54/70 -J1 — AUTO_0.75mm-B
NH3 SENSOR +VE — 55/70 -J1 — AUTO_0.75mm-R
CAN C LOW — 34/70 -J1 — AUTO_0.75mm-U
CAN C HIGH — 33/70 -J1 — AUTO_0.75mm-GY
SCR TEMP. — 15/70 -J1 — AUTO_0.75mm-RY
DOC TEMP. — 22/70 -J1 — AUTO_0.75mm-S
DEF INJECTOR +VE — 20/70 -J1 — AUTO_0.75mm-GK
DEF INJECTOR -VE — 21/70 -J1 — AUTO_0.75mm-RU
XDRG 0V — 12/70 -J1 — AUTO_0.75mm-BY
SWITCH TO GROUND — 36/70 -J1 — AUTO_0.75mm-GB
OK TO ELEVATE — 3/70 -J1 — AUTO_0.75mm-GB
ACU KEYSWITCH — 59/70 -J1

IGN ON — -J1 70/70 — AUTO_0.75mm-W
ELP COIL — -J1 7/70 — AUTO_1mm-P
GLOW PLUG START — -J1 8/70 — AUTO_1mm-N
XNOX RELAY +VE — -J1 5/70 — AUTO_1mm-WP
ACTUATOR RETURN — -J1 18/70 — AUTO_0.75mm-WU
AIR FILTER RESTRICTION — -J1 28/70 — AUTO_0.75mm-BR
ELP SUPPLY — -J1 4/70 — AUTO_2mm-RB
WAIT TO ISOLATE — -J1 48/70 — AUTO_0.75mm-BP — -WTI 1/2 — -X18 1/2 — AUTO_0.75mm-BP — X1 — /3 E10 RED — X2 — -H3 RED — 2/2 -X18 — 2/2 -WTI — AUTO_0.75mm-R
BATT +VE — -J1 2/70 — AUTO_2mm-R
BATT +VE — 11/70 — AUTO_2mm-R
BATT +VE — 38/70 — AUTO_2mm-R — -SP9 — /1.A3 #B+ -LF1:2:1
BATT +VE — 41/70 — AUTO_2mm-R
BATT +VE — 57/70 — AUTO_2mm-R
BATT -VE — -J1 65/70 — AUTO_2mm-B
BATT -VE — -J1 47/70 — AUTO_2mm-B
BATT -VE — -J1 45/70 — AUTO_2mm-B — -SP10 #ECU_-VE — /1.F7
BATT -VE — -J1 35/70 — AUTO_2mm-B
BATT -VE — -J1 13/70 — AUTO_2mm-B
BATT -VE — -J1 9/70 — AUTO_2mm-B

-AFR 1/2 — 0.75mm-R AUTO — AFR SWITCH (BY OTHERS) — 2/2 -AFR

Changing drawing only in the E3!												
	3											
	2			Telematics Wiring	16.01.17	AJC						
	1			Cable Colours	13.12.16	AJC	User					
	0		First Draft		28.11.16	AJC	Proved					
		ECO	Revision text	Revision	Date	Name						

TEREX

Type Standard
M.-Nr.: Kit
Description: Electrical Kit POWER UNIT
Drawing number
Assignment
Location +PU
Sheet 9
No. 16 Sh.

TELEMATICS

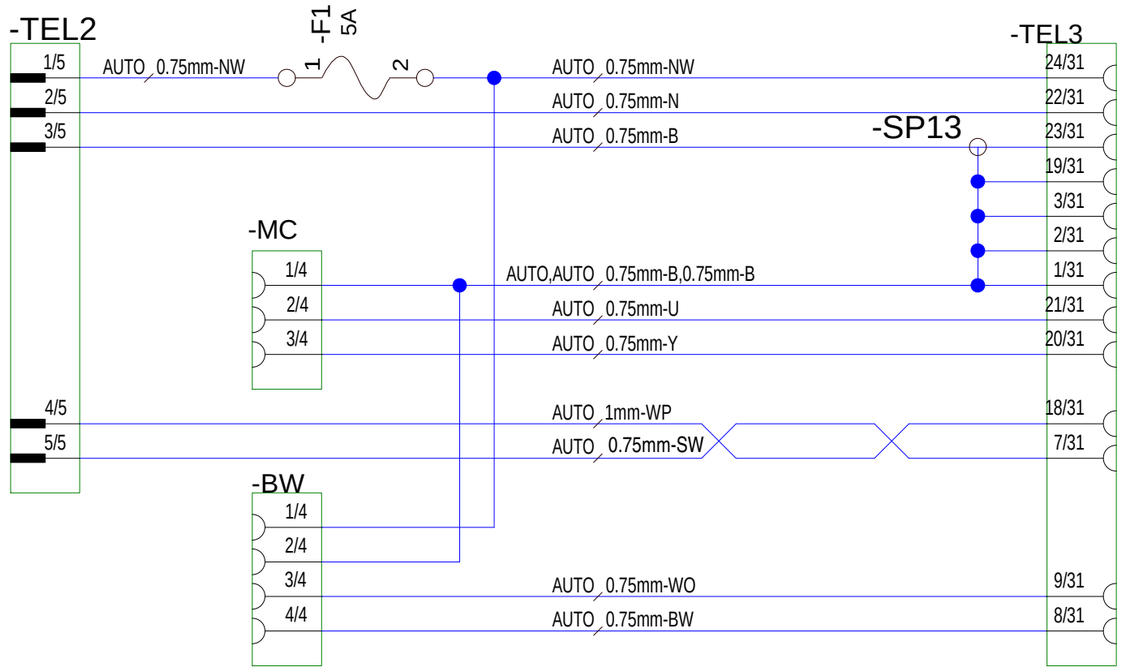

WATER IN FUEL

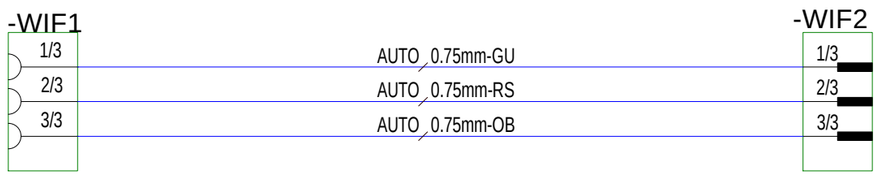

FUEL LIFT PUMP

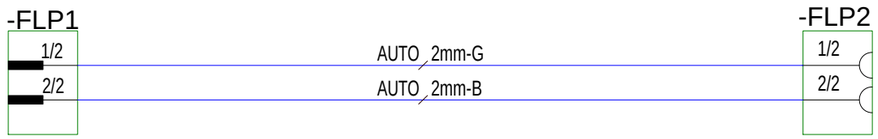

Changing drawing only in the E3!										
	3						Date	Name	TEREX	Type Standard P.-Nr.:
	2		Telematics Wiring	16.01.17	AJC					Description: Electrical Kit POWER UNIT
	1		Cable Colours	13.12.16	AJC	User				Drawing number 60552902.2
	0		First Draft	28.11.16	AJC					Assignment
	Revision	ECO	Revision text	Date	Name	Proved				Location
										Sheet 10
										No. 16 Sh.

For this document and the object represented in that we reserve all rights according to DIN 34.
Duplication announcement onto third party or utilization of his contents are without forbidden to our.

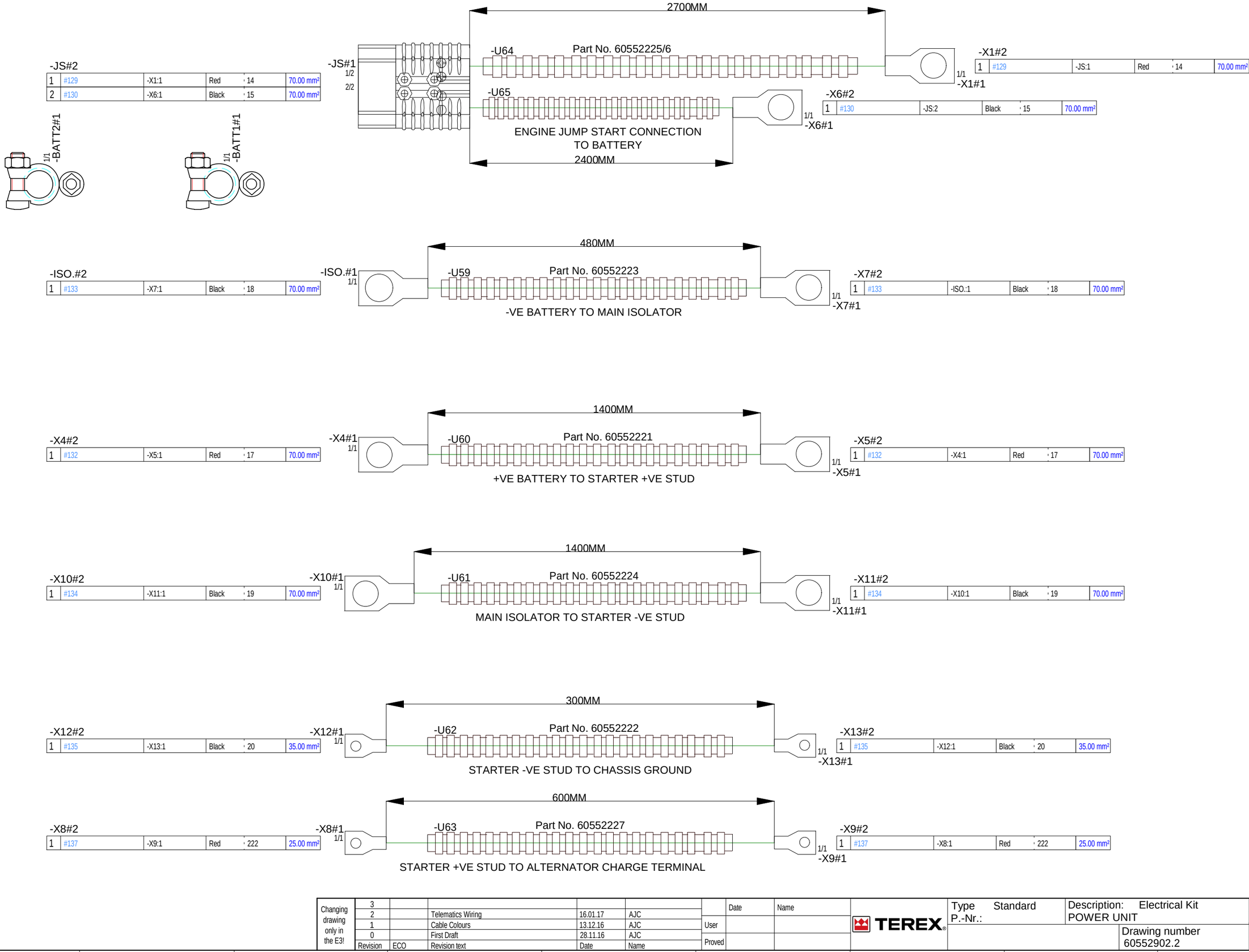

Changing drawing only in the E3!									
	3						Date	Name	
	2		Telematics Wiring	16.01.17	AJC				
	1		Cable Colours	13.12.16	AJC	User			
	0		First Draft	28.11.16	AJC				
	Revision	ECO	Revision text	Date	Name	Proved			

TEREX

Type Standard P.-Nr.:	Description: Electrical Kit POWER UNIT	Assignment Location +BATT	
	Drawing number 60552902.2	Sheet 11 No. 16 Sh.	

For this document and the object represented in that we reserve all rights according to DIN 34.
Duplication, announcement onto third party, or utilizatio on of his contents are without forbidden to our.

-PCBH#2

1	#HDP1	-TRK:1	Green-Yellow 238	0.75 mm²
2	#HDP2	-TRK:2	Black 229	0.75 mm²
3	#HDP3	-TRK:3	Red-White 226	1.00 mm²
4	#HDP4	-TRK:4	Purple 224	0.75 mm²
5	#HDP5	-TRK:5	Blue-Orange 230	0.75 mm²
6	#HDP6	-TRK:6	Brown-Grey 234	1.00 mm²
7	#HDP7	-TRK:7	Black-Yellow 241	1.00 mm²
8	#HDP8	-TRK:8	Blue-Yellow 232	0.75 mm²
9	#HDP9	-TRK:9	Brown-Yellow 236	1.00 mm²
10	#HDP10	-TRK:10	Red-Blue 225	1.00 mm²
11	#HDP11	-FT:1	Purple 271	0.75 mm²
12	#HDP12	-TRK:12	White-Red 243	1.00 mm²
13	#HDP13	+PU-SP4:1	Red 251	0.75 mm²
14	#HDP14	+PU-SP5:1	Black 595	0.75 mm²
15	#HDP15	-TRK:15	Black-Purple 240	1.00 mm²
16	#HDP16	-TRK:16	Green-Pink 245	1.00 mm²
17	#HDP17	-LTF:1	Red-Yellow 85	0.75 mm²
18	#HDP18	-LTR:1	Orange-Black 87	1.00 mm²
19	#HDP19	-RTF:1	Green-Pink 665	0.75 mm²
20	#HDP20	-RTR:1	Green-Orange 661	0.75 mm²
21	#HDP21	+PU-SP6:1	Black 480	0.75 mm²
22	BLANKING PLUG	REQUIRED		
23	#HDP23	-CDS:4	Black-White 535	0.75 mm²
24	BLANKING PLUG	REQUIRED		
25	#HDP25	-HOL:3	Brown-White 188	0.75 mm²
26	#HDP26	-RTG:1	Green-Red 481	0.75 mm²
27	#HDP27	-RTG:2	Black 482	0.75 mm²
28	BLANKING PLUG	REQUIRED		
29	BLANKING PLUG	REQUIRED		
30	#HDP30	-CS:1	Green-Brown 83	0.75 mm²
31	#HDP31	-CS:2	Black 84	0.75 mm²

-SP4#1

#HDP13
Red,Red,Red,Red
255, 251, 593, 606
0.75 mm², 0.75 mm², 0.75 mm², 0.75 mm²

-SP5#1

#HDP14
Black,Black,Black
595, 623, 624
0.75 mm², 0.75 mm², 0.75 mm²

FAST TRACK SOLENOID

-FT#2

1	#HDP11	-PCBH:11	Purple 271	0.75 mm²
2	#HDP21	+PU-SP6:1	Black 93	0.75 mm²
3				
PE				

REMOTE FEEDER START/STOP (OPTIONAL)

-RTG#2

1	#HDP26	-PCBH:26	Green-Red 481	0.75 mm²
2	#HDP27	-PCBH:27	Black 482	0.75 mm²
3				
4				

-HOL#2

1	#HDP13	+PU-SP4:1	Red 593	0.75 mm²
2	#HDP14	+PU-SP5:1	Black 624	0.75 mm²
3	#HDP25	-PCBH:25	Brown-White 188	0.75 mm²
4				

-SP6#1

#HDP21
Black,Black,Black,Black
94, 101, 93, 480
0.75 mm², 0.75 mm², 0.75 mm², 0.75 mm²

-LTF#2

1	#HDP17	-PCBH:17	Red-Yellow 85	0.75 mm²
2	#HDP21	+PU-SP6:1	Black 94	0.75 mm²
3				
PE				

-LTR#2

1	#HDP18	-PCBH:18	Orange-Black 87	1.00 mm²
2	#HDP21	+PU-SP6:1	Black 101	0.75 mm²
3				
PE				

-RTF#2

1	#HDP19	-PCBH:19	Green-Pink 665	0.75 mm²
2	#HDP21	-RTF:2	Black 98	0.75 mm²
3				
PE				

-RTR#2

1	#HDP20	-PCBH:20	Green-Orange 661	0.75 mm²
2	#HDP21	-RTF:2	Black 98	0.75 mm²
3				
PE				

-FS#2

1	#HDP13	+PU-LL1:1	Red 609	0.75 mm²
2	#A7	+PU-LL1:2	Orange-Black 608	0.75 mm²

-LL1#2

1	#HDP13	+PU-FS:1	Red 609	0.75 mm²
2	#A7	+PU-FS:2	Orange-Black 608	0.75 mm²

-CDS#2

1	#HDP13	+PU-SP4:1	Red 255	0.75 mm²
2				
3	#HDP24	+PU-SP5:1	Black 623	0.75 mm²
4	#HDP23	-PCBH:23	Black-White 535	0.75 mm²
5				

-CS#2

1	#HDP30	-PCBH:30	Green-Brown 83	0.75 mm²
2	#HDP31	-PCBH:31	Black 84	0.75 mm²
3				
PE				

-TRK#2

1	#HDP1	-PCBH:1	Green-Yellow 238	0.75 mm²
2	#HDP2	-PCBH:2	Black 229	0.75 mm²
3	#HDP3	-PCBH:3	Red-White 226	1.00 mm²
4	#HDP4	-PCBH:4	Purple 224	0.75 mm²
5	#HDP5	-PCBH:5	Blue-Orange 230	0.75 mm²
6	#HDP6	-PCBH:6	Brown-Grey 234	1.00 mm²
7	#HDP7	-PCBH:7	Black-Yellow 241	1.00 mm²
8	#HDP8	-PCBH:8	Blue-Yellow 232	0.75 mm²
9	#HDP9	-PCBH:9	Brown-Yellow 236	1.00 mm²
10	#HDP10	-PCBH:10	Red-Blue 225	1.00 mm²
11				
12	#HDP12	-PCBH:12	White-Red 243	1.00 mm²
13				
14				
15	#HDP15	-PCBH:15	Black-Purple 240	1.00 mm²
16	#HDP16	-PCBH:16	Green-Pink 245	1.00 mm²

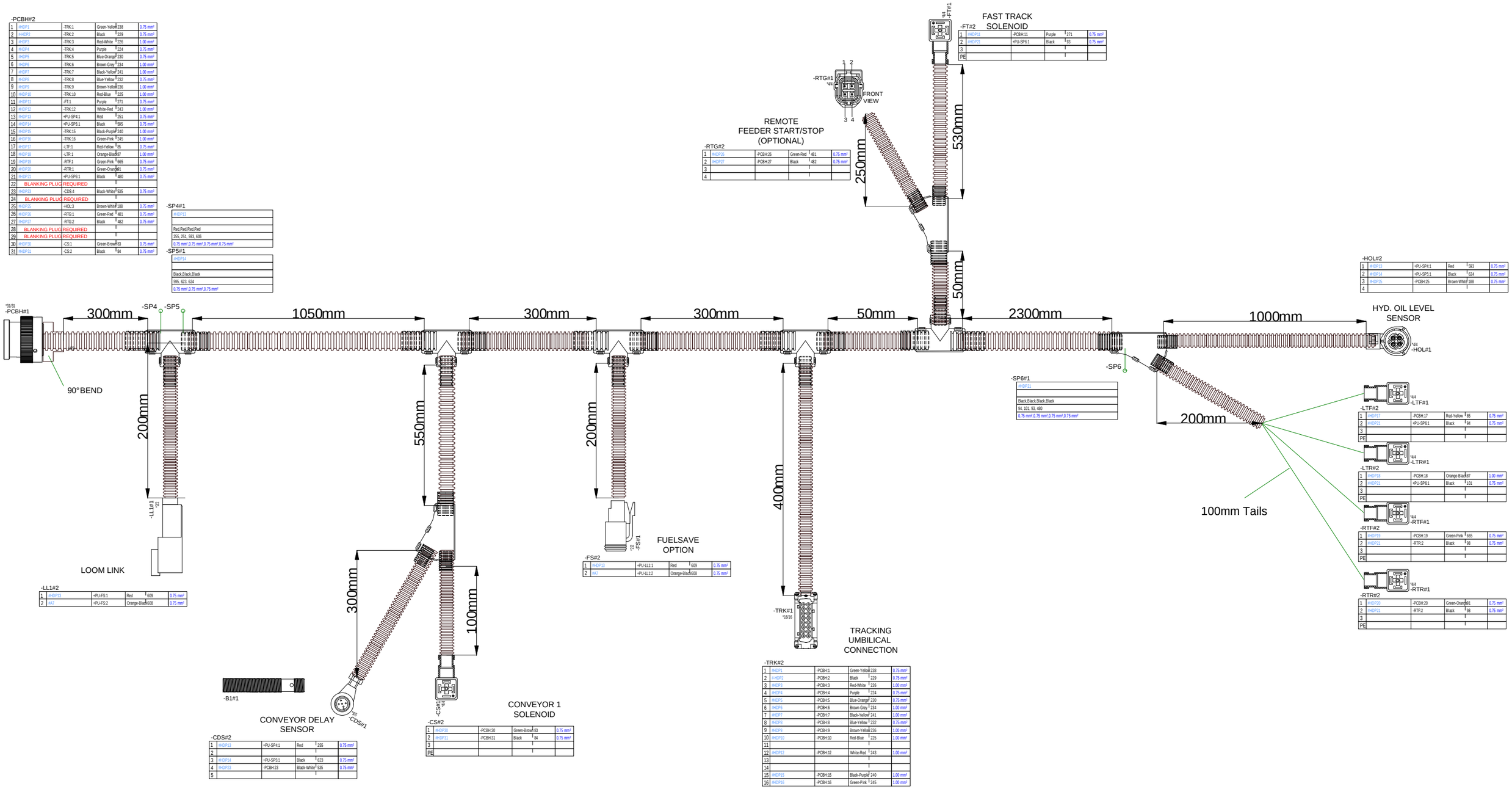

Changing drawing only in the E3	2							Date	Name	
	1		Telematics Wiring	16.01.17	AJC					
	0		Cable Colours	13.12.16	AJC		User			
	3		First Draft	28.11.16	AJC		Proved			
	Revision	ECO	Revision text	Date	Name					

TEREX

Type	Standard	Description:	Electrical Kit POWER UNIT
M.-Nr.:	Kit	Drawing number	60552902.2

Assignment	
Location	+AUX
Sheet	12
No.	16 St.

90° BEND - FLEXICON FLT 90

300MM 100MM 50MM 800MM 350MM 200MM 250MM 100MM +TEL

-LL2#1 *20
100MM 50MM 450MM
-LL2#2 LOOM LINK

1	#H2/P13	-SP4:1	Red 606	0.75 mm²
2	#A7	-PCBA:4	Orange-Black 610	0.75 mm²

DT06-2S

-ESS#1 *20

-WIF1#2

1	#3134	-WIF2:1	Green-Blue 628	0.75 mm²
2	#3132	-WIF2:2	Red-Grey 629	0.75 mm²
3	#3135	-WIF2:3	Orange-Black 630	0.75 mm²

776429-3

-ESS#2 ESTOP CHASSIS BOX

1	#B9	-PCBB:9	Brown 612		0.75 mm²
2	#B7	-PCBB:7	Black 611		0.75 mm²

0-011-52

WATER IN FUEL
*30
-WIF1#1
50MM
+TEL
300MM
50MM
100MM
550MM
-AFR#2

1	#B18	-PCBB:18	Red 194	0.75 mm²
2	#28	-J1:28	Black-Red 192	0.75 mm²

776427-1

AIR FILTER RESTRICTION
-AFR#1 *20
300MM
-LI#1 *20

POWER UNIT LIGHT

-LI#2

1	#B12	-PCBB:12	Green-White 479	0.75 mm²
2	#-VE_SPLICE	-SP:2	Black 622	0.75 mm²

0-011-62

-PH#1 *10
-PH#2

1	#J103	DTHD-06-1-6S

ENGINE PREHEAT TERMINAL 60505146

60505272 1WAY MALE DEUTSCH
-X20#1 *01
150mm
6mm Sq. AVTO
PRE-HEAT LEAD 60552427
60536075 6.4mm RING
-X19#1 *01

50MM 800MM 50MM 150MM 200MM 100MM

-TH1#2

1	#CAN2_L	-SP11:1	Blue 415	0.75 mm²
2	#CAN2_H	-SP12:1	Green-Yellow 530	0.75 mm²
3	#201	-SP8:1	Black 662	0.75 mm²
4	#D6	-SP7:1	Red 532	1.00 mm²

TANK HEADER UNIT
-TH1#1 *04
200MM 100MM
-SP7
-SP8
-HL3#1 *20
200MM
HEATED LINE NO. 3 (RETURN)
300MM

-HL3#2

1	#HL3-1	-SP141	Green-Red 425	0.75 mm²
2	#HL3-2	-XN1:18	Green-White 426	0.75 mm²

60505024.

*22 -FLP1#1
FUEL LIFT PUMP

-FLP1#2

1	#3125	-FLP2:1	Green 486	2.00 mm²
2	#-VE_SPLICE	-FLP2:2	Black 485	2.00 mm²

60505095

100MM 200MM 100MM
-J1#1 *01
70/70
ENGINE ECM PLUG

-J1#2

1	BLANKING PLUG REQUIRED			
2	#B+	-SP9:1	Red 519	2.00 mm²
3	#B+	-J1:36	Green-Black 592	0.75 mm²
4	#202	-PCBD:2	Red-Black 515	2.00 mm²
5	#28	-PCBD:8	White-Purple 517	1.00 mm²
6	BLANKING PLUG REQUIRED			
7	#D9	-PCBD:9	Purple 366	1.00 mm²
8	#D11	-PCBD:11	Brown 26	2.00 mm²
9	#ECU_-VE	-SP10:1	Black 508	2.00 mm²
10	BLANKING PLUG REQUIRED			
11	#B+	-SP9:1	Red 520	2.00 mm²
12	#3120	-XN1:24	Black-Yellow 501	0.75 mm²
13	#ECU_-VE	-SP10:1	Black 507	2.00 mm²
14	BLANKING PLUG REQUIRED			
15	#3116	-XN1:8	Red-Yellow 499	0.75 mm²
16	BLANKING PLUG REQUIRED			
17	BLANKING PLUG REQUIRED			
18	#B17	-PCBB:17	White-Blue 11	0.75 mm²
19	BLANKING PLUG REQUIRED			
20	#3118	-XN1:11	Green-Pink 666	0.75 mm²
21	#3119	-XN1:12	Red-Blue 503	0.75 mm²
22	#3117	-XN1:9	Grey 500	0.75 mm²
23	BLANKING PLUG REQUIRED			
24	BLANKING PLUG REQUIRED			
25	#B11	-XN1:20	Green-Blue 456	0.75 mm²
26	#B8	-XN1:21	Blue-Yellow 458	0.75 mm²
27	BLANKING PLUG REQUIRED			
28	#28	-AFR:2	Black-Red 192	0.75 mm²
29	BLANKING PLUG REQUIRED			
30	BLANKING PLUG REQUIRED			
31	BLANKING PLUG REQUIRED			
32	BLANKING PLUG REQUIRED			
33	#CAN2_H	-SP12:1	Green-Yellow 599	0.75 mm²
34	#CAN2_L	-SP11:1	Blue 597	0.75 mm²
35	#ECU_-VE	-SP10:1	Black 387	2.00 mm²
36	#B-	-J1:3	Green-Black 592	0.75 mm²
37	BLANKING PLUG REQUIRED			
38	#B+	-SP9:1	Red 521	2.00 mm²
39	BLANKING PLUG REQUIRED			
40	BLANKING PLUG REQUIRED			
41	#B+	-SP9:1	Red 522	2.00 mm²
42	BLANKING PLUG REQUIRED			
43	BLANKING PLUG REQUIRED			
44	BLANKING PLUG REQUIRED			
45	#ECU_-VE	-SP10:1	Black 388	2.00 mm²
46	BLANKING PLUG REQUIRED			
47	#ECU_-VE	-SP10:1	Black 389	2.00 mm²
48	#3139	-WTI:1	Black-Purple 548	0.75 mm²
49	BLANKING PLUG REQUIRED			
50	BLANKING PLUG REQUIRED			
51	BLANKING PLUG REQUIRED			
52	BLANKING PLUG REQUIRED			
53	BLANKING PLUG REQUIRED			
54	#28	-SP7:1	Black 617	0.75 mm²
55	#201	-SP8:1	Red 618	0.75 mm²
56	BLANKING PLUG REQUIRED			
57	#B+	-SP9:1	Red 523	2.00 mm²
58	BLANKING PLUG REQUIRED			
59	#202	-XN1:4	White-Orange 419	0.75 mm²
60	BLANKING PLUG REQUIRED			
61	BLANKING PLUG REQUIRED			
62	BLANKING PLUG REQUIRED			
63	BLANKING PLUG REQUIRED			
64	BLANKING PLUG REQUIRED			
65	#ECU_-VE	-SP10:1	Black 506	2.00 mm²
66	BLANKING PLUG REQUIRED			
67	BLANKING PLUG REQUIRED			
68	BLANKING PLUG REQUIRED			
69	BLANKING PLUG REQUIRED			
70	#B-	-PCBB:3	White 193	0.75 mm²

DRC16-70SA

WATER IN FUEL CON.2
-WIF2#2

1	#3134	-WIF1:1	Green-Blue 628	0.75 mm²
2	#3132	-WIF1:2	Red-Grey 629	0.75 mm²
3	#3135	-WIF1:3	Orange-Black 630	0.75 mm²

776430-3

-FLP1#1 *02
FUEL LIFT PUMP CON.2

-FLP2#2

1	#3125	-FLP1:1	Green 486	2.00 mm²
2	#-VE_SPLICE	-FLP1:2	Black 485	2.00 mm²

60505024.

1000MM 1000MM
-XN1#1 *01
XNOX CONNECTOR

-XN1#2

1	#D6	-SP7:1	Red 370	0.75 mm²
2	#D6	-SP7:1	Red 538	0.75 mm²
3	#D6	-SP7:1	Red 539	0.75 mm²
4	#202	-J1:59	White-Orange 419	0.75 mm²
5	#201	-SP8:1	Black 375	0.75 mm²
6	#201	-SP8:1	Black 540	0.75 mm²
7	#201	-SP8:1	Black 541	0.75 mm²
8	#3116	-J1:15	Red-Yellow 499	0.75 mm²
9	#3117	-J1:22	Grey 500	0.75 mm²
10	BLANKING PLUG REQUIRED			
11	#3118	-J1:20	Green-Pink 666	0.75 mm²
12	#3119	-J1:21	Red-Blue 503	0.75 mm²
13	#HL1-1	-HL1:1	Green-Purple 429	1.00 mm²
14	#HL1-2	-HL1:2	Black-White 430	0.75 mm²
15	#HL2-1	-HL2:1	Pink 427	0.75 mm²
16	#HL2-2	-HL2:2	Orange-Black 428	0.75 mm²
17	#HL3-1	-SP14:1	Green-Red 600	0.75 mm²
18	#HL3-2	-HL3:2	Green-White 426	0.75 mm²
19	#CDV-3	-CDV:3	Orange-Green 423	0.75 mm²
20	#B11	-J1:25	Green-Blue 456	0.75 mm²
21	#B8	-J1:26	Blue-Yellow 458	0.75 mm²
22	#CAN2_H	-SP12:1	Green-Yellow 408	0.75 mm²
23	#CAN2_L	-SP11:1	Blue 497	0.75 mm²
24	#3120	-J1:12	Black-Yellow 501	0.75 mm²
25	BLANKING PLUG REQUIRED			
26	BLANKING PLUG REQUIRED			
27	BLANKING PLUG REQUIRED			
28	BLANKING PLUG REQUIRED			
29	BLANKING PLUG REQUIRED			
30	BLANKING PLUG REQUIRED			
31	BLANKING PLUG REQUIRED			

HDP24-24-31SE

-SP7#1

| | | | | |

-SP13#1

#T_GND	
Black,Black,Black,Black,Black,Black,Black,Black	
638, 639, 640, 641, 642, 643, 667, 668	
0.75 mm²,0.75 mm²,0.75 mm²,0.75 mm²,0.75 mm²,0.75 mm²,0.75 mm²,0.75 mm²	

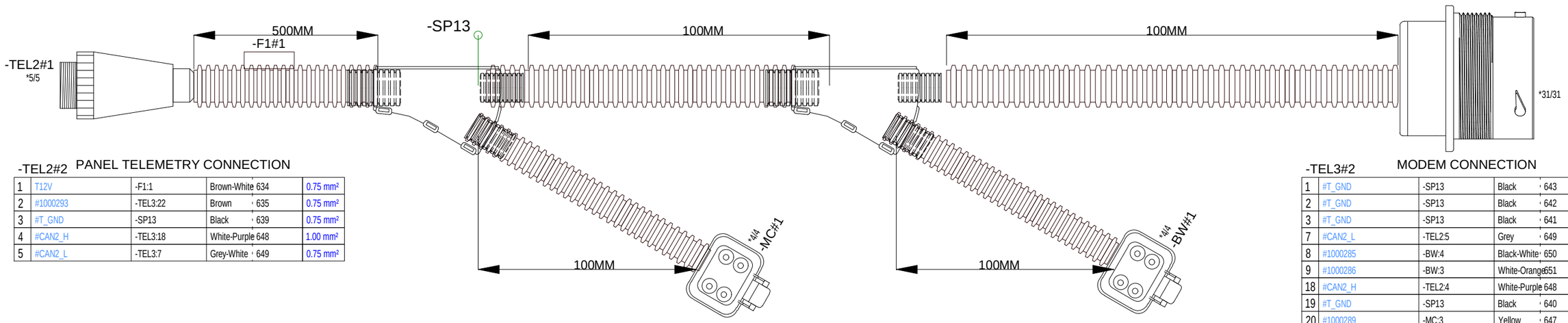

-TEL2#2 PANEL TELEMETRY CONNECTION

1	T12V	-F1:1	Brown-White	634	0.75 mm²
2	#1000293	-TEL3:22	Brown	635	0.75 mm²
3	#T_GND	-SP13	Black	639	0.75 mm²
4	#CAN2_H	-TEL3:18	White-Purple	648	1.00 mm²
5	#CAN2_L	-TEL3:7	Grey-White	649	0.75 mm²

-MC#2 MANUAL CONNECTION

1	#T_GND	-SP13	Black	667	0.75 mm²
2	#-VE	-TEL3:21	Blue	646	0.75 mm²
3	#1000289	-TEL3:20	Yellow	647	0.75 mm²
4					

-BW#2 BELT WEIGH CONNECTION

1	#T12V1	-F1:2	Red-Black	654	0.75 mm²
2	#T_GND	-SP13	Black	668	0.75 mm²
3	#1000286	-TEL3:9	White-Black	651	0.75 mm²
4	#1000285	-TEL3:8	Black-White	650	0.75 mm²

-TEL3#2 MODEM CONNECTION

1	#T_GND	-SP13	Black	643	0.75 mm²
2	#T_GND	-SP13	Black	642	0.75 mm²
3	#T_GND	-SP13	Black	641	0.75 mm²
7	#CAN2_L	-TEL2:5	Grey	649	0.75 mm²
8	#1000285	-BW:4	Black-White	650	0.75 mm²
9	#1000286	-BW:3	White-Orange	651	0.75 mm²
18	#CAN2_H	-TEL2:4	White-Purple	648	1.00 mm²
19	#T_GND	-SP13	Black	640	0.75 mm²
20	#1000289	-MC:3	Yellow	647	0.75 mm²
21	#-VE	-MC:2	Blue	646	0.75 mm²
22	#1000293	-TEL2:2	Brown	635	0.75 mm²
23	#T_GND	-SP13	Black	638	0.75 mm²
24	#T12V1	-F1:2	Brown-White	652	0.75 mm²

For this document and the object represented in that we reserve all rights according to DIN 34.
Duplication announcement onto third party or utilization of his contents are without forbidden to our.

Changing drawing only in the E3!					
	3				
	2	Telematics Wiring		16.01.17	AJC
	1		Cable Colours	13.12.16	AJC
	0		First Draft	28.11.16	AJC
	Revision	ECO	Revision text	Date	Name

	Date	Name
User		
Proved		

TEREX

Type Standard
P.-Nr.:

Description:Electrical Kit
POWER UNIT

Drawing number
60552902.2

Assignment
Location +TEL
Sheet 14
No. 16 Sh.

For this document and the object represented in that we reserve all rights according to DIN 34.
Duplication announcement onto third party or utilization of his contents are without forbidden to our.

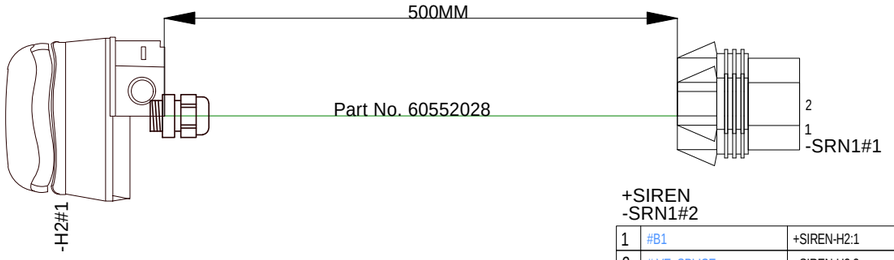

+SIREN
-SRN1#2

1	#B1	+SIREN-H2:1	Brown	BN	1.00 mm²
2	#-VE_SPLICE	+SIREN-H2:2	Blue	BU	1.00 mm²

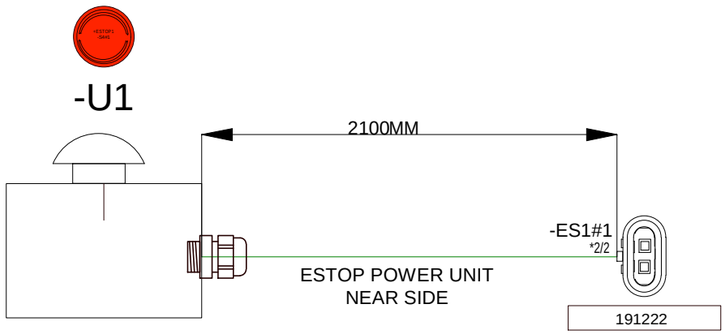

+ESTOP1
-ES1#2

1	#B9	+ESTOP1-S4:1	Brown	BN	1.00 mm²
2	#IGN_ON	+ESTOP1-S4:2	Blue	BU	1.00 mm²

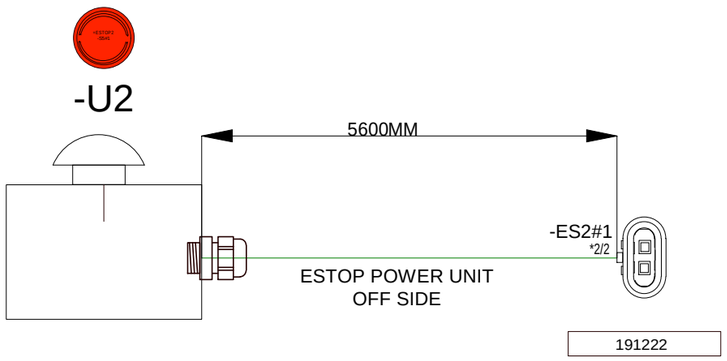

+ESTOP2
-ES2#2

1	#IGN_ON	+ESTOP2-S5:1	Brown	BN	1.00 mm²
2	#IGN_ON	+ESTOP2-S5:2	Blue	BU	1.00 mm²

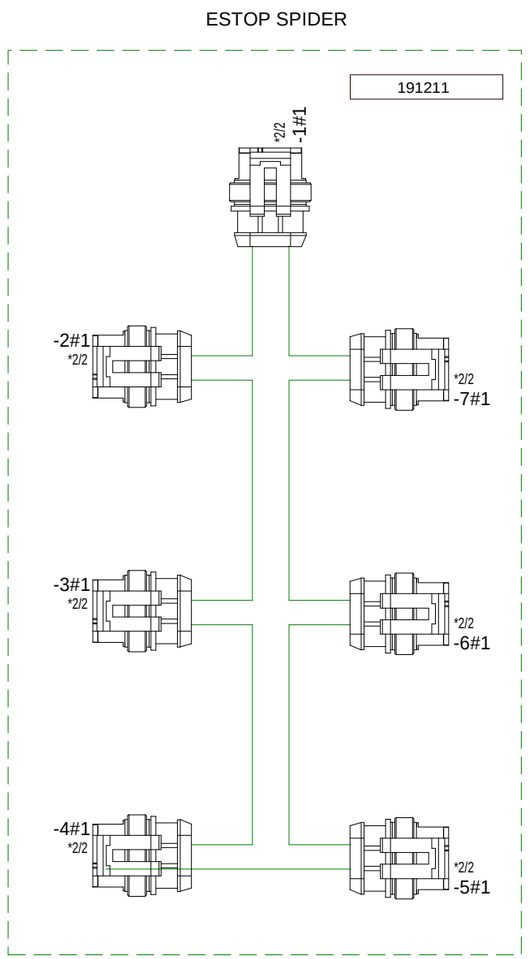

Changing drawing only in the E3!										
	3						Date	Name	TEREX	Type Standard P.-Nr.:
	2		Telematics Wiring	16.01.17	AJC					Description: Electrical Kit POWER UNIT
	1		Cable Colours	13.12.16	AJC	User				Assignment Location +CHAS
	0		First Draft	28.11.16	AJC					Drawing number 60552902.2
	Revision	ECO	Revision text	Date	Name	Proved				Sheet 15 No. 16 Sh.

For this document and the object represented in that we reserve all rights according to DIN 34.
Duplication announcement onto third party or utilization of his contents are without forbidden to our.

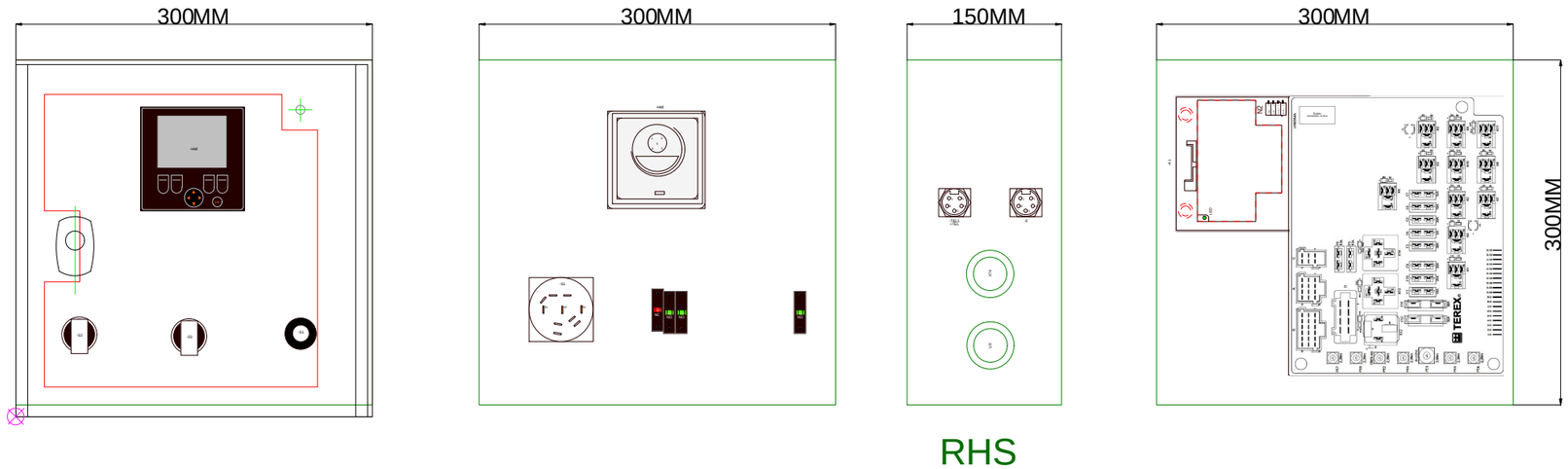

RHS

Changing drawing only in the E3!										
	3						Date	Name	TEREX	Type Standard P.-Nr.:
	2		Telematics Wiring	16.01.17	AJC					Description: Electrical Kit POWER UNIT
	1		Cable Colours	13.12.16	AJC	User				Drawing number 60552902.2
	0		First Draft	28.11.16	AJC	Proved				Assignment Location +PU Sheet 16 No. 16 Sh.
	Revision	ECO	Revision text	Date	Name					

(5) Dual Power Schematics

Intentionally Left Blank

For this document and the object represented in that we reserve all rights according to DIN 34.
Duplication announcement onto third party or utilization of his contents are without forbidden to our.

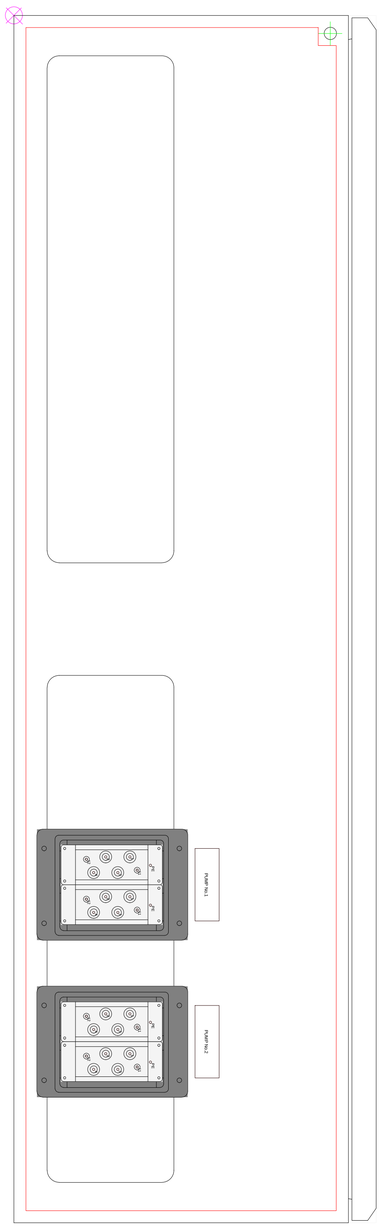

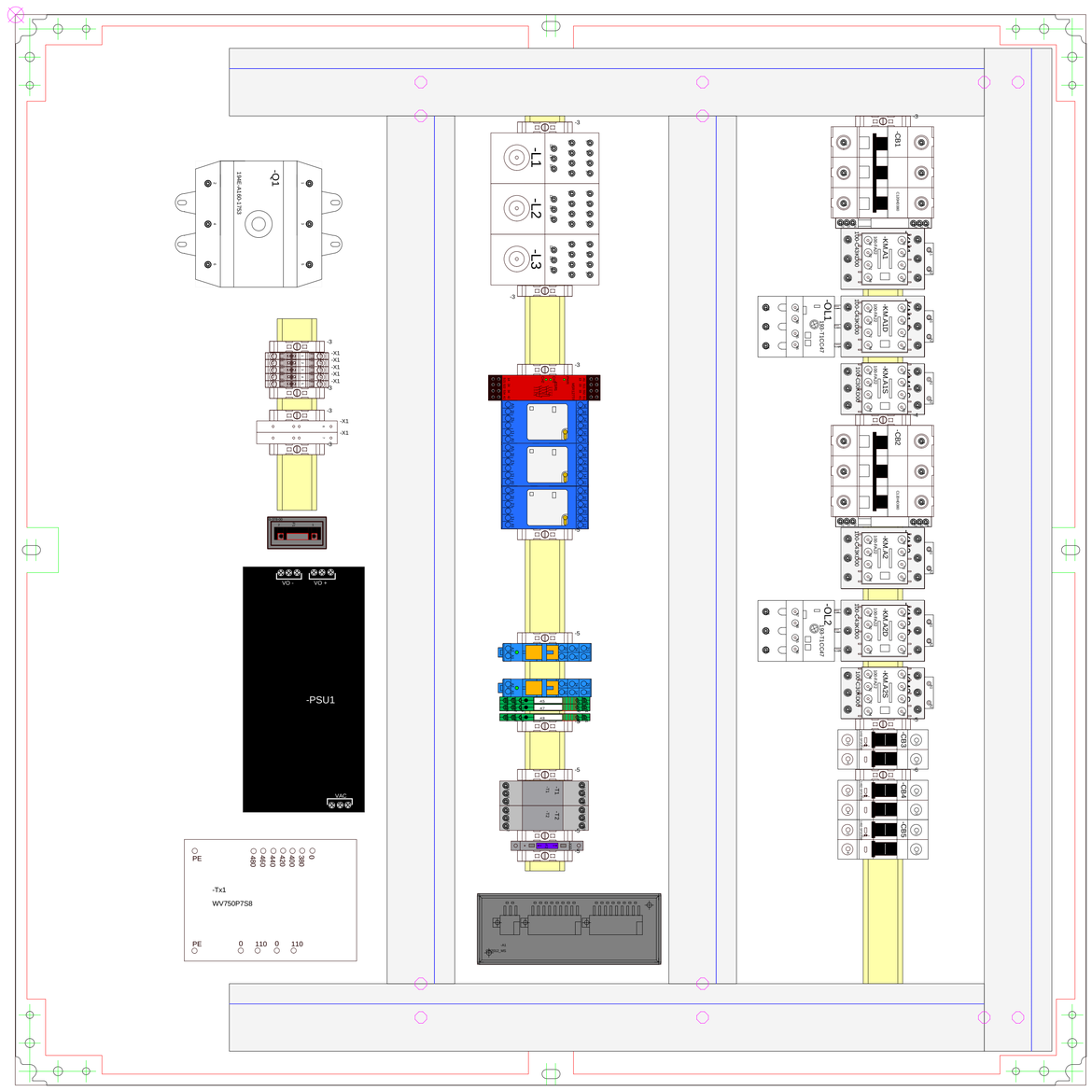

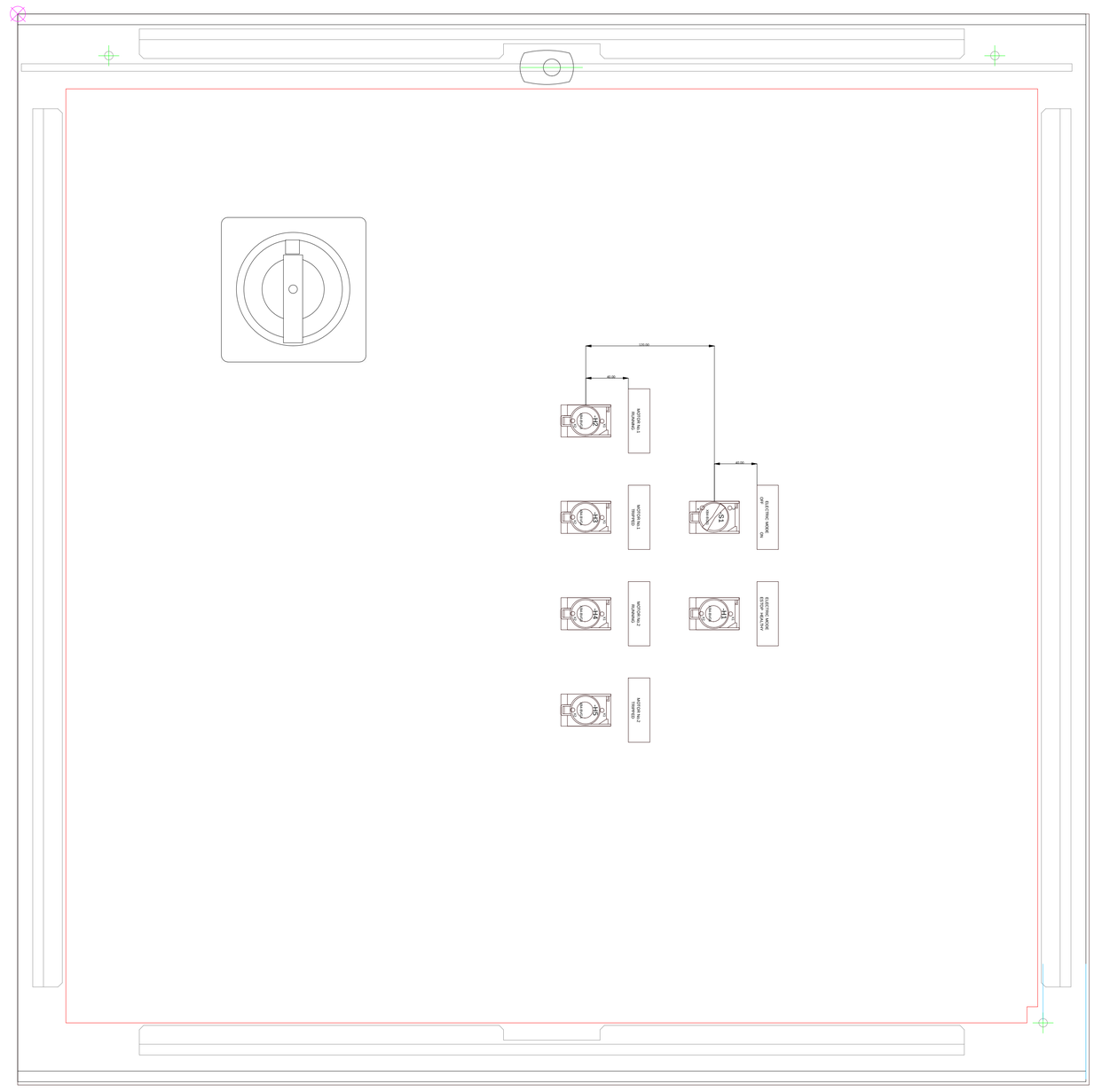

Changing drawing only in the E3!										
	Revision	ECO	Revision text	Date	Name		Date	Name		
	3									
	2									
	1		FIRSTDRAFT	23.5.12	CD	User				
	0					Proved				

TEREX

Type
M.-Nr.:

Description: T4 DUAL POWER
AC PANEL (37KW+37KW)

Drawing number
60552415.0

Assignment
Location
Sheet 1
No. 7
Sh.

AC Control Panel Internal Wiring Colour Code Guide	
Mains L1 (230/415VAC)	Brown (or Black flagged Brown or L1 at Terminal)
Mains L2 (230/415VAC)	Black (or Black flagged L2 at Terminal)
Mains L3 (230/415VAC)	Grey (or Black flagged Grey or L3 at Terminal)
Mains Neutral (230/415VAC)	Blue
Protective Conductor	Green/Yellow
110VAC	Yellow
24VDC	Grey
12VDC	Green
Analogue (0-10V, 4-20mA)	Orange
CAN H (CANBus)	Pink — Twisted
CAN L (CANBus)	White — Twisted
Volt Free Contacts to Field	Violet (Purple)

Changing drawing only in the E3!	Revision	ECO	Revision text	Date	Name
	0		FIRSTDRAFT	23.5.12	CD
	1				
	2				
	3				

	Date	Name
User		
Proved		

TEREX

Type M.-Nr.:	Description: T4 DUAL POWER AC PANEL (37KW+37KW)	Drawing number 6055241S.0
Assignment		
Location		Sheet 2
No. 7		Sh.

HYD. PUMP No.1
MOTOR
37kW 400V/50Hz
69AfIC

-Q1
1943-A160-1753

-SKT1 1/7 2/7 3/7 4/7 — CXF4/2 — 16GN/YE — 16-BK
-SKT2 1/7 2/7 3/7 4/7 — CXF4/2 — 16GN/YE — 16-BK
W1 V2 V1 3~ U2 U1 M W2
-OLL1 193-T1CC47 set to 42A 1 3 5 / 2 4 6 / 95 96 97 / /5.G2 /5.F6 /5.G3
-KM1 100-C43KD00 /5.G1
-KM.A1 /4.B11
-KM.A1D /5.G4 /4.C11 /5.D8
-KM1.D 100-C43KD00 /5.I3
-KM1.S 100-C30KD00 /5.I4
-KM.A1S /4.C10 /5.G3
-CB1 C120HD380 80A 1 3 5 / 2 4 6
-CB.A1 26929 /5.F6 /5.C2
25-BK
-L1 /2.D2 -L2 /2.D3 -L3 /2.D3
-L1 /2.B5 /2.B9 /3.A3 -L2 /2.B5 /2.B9 /3.A3 -L3 /2.B5 /2.B9
70-BLK

HYD. PUMP No.1
MOTOR
37kW 400V/50Hz
69AfIC

-SKT3 1/7 2/7 3/7 4/7 — CXF4/2 — 16GN/YE — 16-BK
-SKT4 1/7 2/7 3/7 4/7 — CXF4/2 — 16GN/YE — 16-BK
W1 V2 V1 3~ U2 U1 M W2
-OLL2 193-T1CC47 set to 42A 1 3 5 / 2 4 6 / 95 96 97 / /5.G2 /5.F6 /5.G3
-KM2 100-C43KD00 /5.I2
-KM.A2 /4.C11
-KM.A2D /5.G5 /4.D11 /5.G7
-KM2.D 100-C43KD00 /5.I5
-KM2.S 100-C30KD00 /5.I6
-KM.A2S /4.B10 /5.G4
-CB2 C120HD380 80A 1 3 5 / 2 4 6
-CB.A2 26929 /6.F7 /6.C3
25-BK
-L1 /2.D2 -L2 /2.D3 -L3 /2.D3

For this document and the object represented in that we reserve all rights according to DIN 34.
Duplication announcement onto third party or utilization of his contents are without forbidden to our.

For this document and the object represented in that we reserve all rights according to DIN 34.
Duplication announcement onto third party or utilization of his contents are without forbidden to our.

-L1 /2.D2
-L2 /2.D3

1492-SP2C040
-CB3
4A

-Tx1
WV750P7S8
480 460 440 420 400 380 0
110 110 0 0
PE
2.5-GNYE

1492-SP2C060
-CB4
6A

#110V-L1
#110V-L2
/4.B6
/4.B6

1492-SP2C060
-CB5
6A

/4.G11
RUMC3AB2F7
-K3

/4.G11
RUMC3AB2F7
-K3

2.5-GNYE

SMR600PS12
-PSU1
L N PE
+ + + - - -

-X2
-X6
6mm-R
6mm-B

NOTE:
SET OUTPUT VOLTAGE
AT13.8 VOLTS

-X4
-F1
50A
-X5
6mm-R

-X1 6
3036110
-D1
-X1 7
3036110

-VE BATTERY TERMINAL
-X7

+VE BATTERY TERMINAL
-X8
6mm-R

Changing drawing only in the E3!	3						Date	Name	Type M.-Nr.:	Description: T4 DUAL POWER AC PANEL (37KW+37KW)	Assignment
	2										Location
	1						User				Sheet 3
	0		FIRSTDRAFT	23.5.12	CD		Proved			Drawing number 60552415.0	No. 7 Sh.
	Revision	ECO	Revision text	Date	Name						

For this document and the object represented in that we reserve all rights according to DIN 34.
Duplication announcement onto third party or utilization of his contents are without forbidden to our.

-A1
/5.B9
purchaser
5050143211

ifm
CR2012

X1
Digital-Eingänge

IN1 HYD PUMP No.1 RUNNING	1	/5.B9
+UB	2	
IN2 HYD PUMP No.1 TRIPPED	3	/5.B10
+UB	4	
IN3 HYD PUMP No.2 RUNNING	5	/6.B8
+UB	6	
IN4 HYD PUMP No.2 TRIPPED	7	/6.B9
+UB	8	
+UB	9	
+UB	10	
IN5	11	
IN6	12	
GND	13	
GND	14	
IN7 / OUT7 HYD PUMP No.1 RUN OP	15	/5.B12
GND	16	
IN8 / OUT8 HYD PUMP No.2 RUN OP	17	/6.B11
GND	18	

X2
Digital-Eingänge

IN9 ELECTRIC MODE SELECTED	1	/7.A3
+UB	2	
IN10 AC PANEL ESTOP HEALTHY	3	/7.A5
+UB	4	
IN11	5	
+UB	6	
IN12	7	
+UB	8	
+UB	9	
+UB	10	
IN13	11	
IN14	12	
GND	13	
GND	14	
IN15 / OUT15 AC PANEL SIREN	15	/7.A7
GND	16	
IN16 / OUT16	17	
GND	18	

S1 = 3 (BAUDRATE 250kb/s)
S2 = 2 (NODE ID 2)

Betriebsspannung CAN-Bus
X3

-AX1	1	+UB
-AX1	2	GND
-AX1	3	+UB
-AX1	4	GND
-AX1	5	CAN_L
-AX1	6	CAN_H

-F2
3A

-X1
3031364

-W1:SH1

-S1
XB4-BD21
ELECTRIC MODE SELECTED
/7.C2

-K1
RUMC3AB2JD
/4.G5

-K2
RUMC3AB2JD
/4.G6

-K1
/4.F5
/4.A7
/4.A8
RUMC3AB2JD

-K2
/4.F6
/4.B7
/4.B8
RUMC3AB2JD

/4.G5 RUMC3AB2JD -K1
/4.G6 RUMC3AB2JD -K2
/4.H5 RUMC3AB2JD -K1
/4.H6 RUMC3AB2JD -K2

/3.E6 #110V-L1 -CB4:2
/3.E6 #110V-L2 -CB4:4

-ESR1
AB-MSR127TP
S12 S52 S21 S22 A1 13 23 33 41
S34 S11 A2 14 24 34 42

-KM.A2S 100-FA22 /2.E12
-KM.A1S 100-FA22 /2.E8
-KM.A1 100-FA22 /2.E5
-KM.A1D 100-FA22 /2.E6
-KM.A2 100-FA22 /2.E9
-KM.A2D 100-FA22 /2.E11

-H1
XB4-BVG6
BLUE

-K3
RUMC3AB2F7
/4.G11

#CIC /5.A1
#OVAC CIC /5.H1

-K3
/4.F11
/3.C8
/3.D8
/7.C4
RUMC3AB2F7

Changing drawing only in the E3!	3							Date	Name	TEREX	Type M.-Nr.:	Description: T4 DUAL POWER AC PANEL (37KW+37KW)		Assignment
	2						User							Location
	1												Drawing number 60552415.0	Sheet 4
	0		FIRSTDRAFT	23.5.12	CD		Proved							No. 7 Sh.
	Revision	ECO	Revision text	Date	Name									

Changing drawing only in the E3!	Revision	ECO	Revision text	Date	Name
3					
2					
1			FIRSTDRAFT	23.5.12	CD
0					

	Date	Name
User		
Proved		

TEREX

Type	Description: T4 DUAL POWER	Drawing number
M.-Nr.:	AC PANEL (37KW+37KW)	60552415.0

Assignment	Sht.	No.
Location	Sheet 5	7

For this document and the object represented in that we reserve all rights according to DIN 34.
Duplication announcement onto third party or utilization of his contents are without forbidden to our.

PUMP No.1 STAR/DELTA CONTROL

/4.F11 #0VAC C/C — /6.H1 #0VAC C/C

RUN — TRIP

-KM1 /5.H2 — 100-C43KD00 — /2.E5
-T1 /5.F3 — RBT3A31BU Set to 15sec — /5.G2
-KM1.D /5.H3 — 100-C43KD00 — /2.E6
-KM1.S /5.H4 — 100-C30KD00 — /2.E7
-K4 /5.G6 — RSB2A080F7 — /5.C10 /5.D3
-H2 GREEN — XB4-BVG3
-H3 RED — XB4-BVG4
-KM.A1S 100-FA22 /2.E8 — -KM.A1D 100-FA22 /2.E7
-OL1 193-T1CC47 /2.F6 set to 42A
-CB.A1 /2.D5 26929
-SKT1 /2.F7 CXF4/2 — CXF4/2 -SKT1 /2.F7
-K6 RSB2A080F7 /6.J7
PLC_RSC_12VDC -K5 /5.D11
-KM.A1D 100-FA22 /2.E6
-K5 /5.D11 — /5.B2
PLC_RSC_12VDC -K5 /5.D12
-K4 RSB2A080F7 /5.I6

/6.A2 #CC — /4.E11 #CC

	IN 1	IN 2	IN 7 / OUT 7
HYD PUMP No.1 RUNNING	2/18 1/18	4/18 3/18	16/18 15/18
HYD PUMP No.1 TRIPPED			
HYD PUMP No.1 RUN Op			
-A1	-AX2 X1 -AX2	-AX2 X1 -AX2	-AX2 X1 -AX2
Sidewire- bestr-ebung /4.A3		Sidewire- bestr-ebung /4.B3 /4.A5	Sidewire- bestr-ebung /4.B3 /4.C5

5050143211 — 5050143211 — 5050143211

For this document and the object represented in that we reserve all rights according to DIN 34.
Duplication announcement onto third party or utilization of his contents are without forbidden to our.

/5.A12 #C/C

31 31

31 — 11 /6.D10 PLC_RSC_12VDC -K7 — 14 12

56 56 — 11 /2.D9 26929 -CB.A2 — 14 12

57 — 21 /5.I6 RSB2A080F7 -K4 — 24 22

-SKT3 58 CXF-4/2 — 1/17 1/27

CXF-4/2 -SKT3

55 — 15 /6.H3 RE8TA31BU -T2 — 18 16 — 62

59 — 95 -OL2 193-T1CC47 /2.F11 set to 42A 96 — 55

60 62 — 61 -KM.A2S 100-FA22 /2.E12 62

60 62 — 71 -KM.A2D 100-FA22 /2.E11 72

31 — 31 — 97 -OL2 193-T1CC47 /2.F11 set to 42A 98 — 64

31 — 31 — 21 /2.D9 26929 -CB.A2 — 24 22 — 64

64 — 64

64 — 64 — A1 -K6 RSB2A080F7 /6.H7 A2

55 55 55 55 55 — A1 -KM2 100-C43KD00 /6.H2 A2 — 32

55 55 — A1 -T2 RE8TA31BU Set to 15 sec B1 A2 — 32

55 55 — A1 -KM.2D 100-C43KD00 /6.H4 A2 — 32

55 55 — A1 -KM.2.S 100-C30KD00 /6.H5 A2 — 32

60 — X1 -H4 XB4-BVG3 GREEN GREEN X2 — 32

64 64 — X1 -H5 XB4-BVG4 RED RED X2 — 32

/5.H12 #0VAC O/C — 32 32 32 32 32 32 32 32

PUMP No.2 STAR/DELTA CONTROL RUN TRIP

-KM2 /6.H2 /2.E9 100-C43KD00

-T2 /6.F4 18 16 /6.G3 15

-KM2.D /6.H4 /2.E10 100-C43KD00

-KM2.S /6.H5 /2.E12 100-C30KD00

-K6 /6.G7 14 12 /5.D2 11 24 22 /6.C9 21 RSB2A080F7

5050143211 — Software-beschreibung Master /4.B3 /4.B5 — HYD PUMP No.2 RUNNING -A1 — IN 3 — 6 5 X1 — 6/18 5/18 -AX2 -AX2 — 65 66 — 53 -KM.A2D 100-FA22 /2.E11 54 — 66 66

5050143211 — Software-beschreibung Master /4.B3 /4.B5 — HYD PUMP No.2 TRIPPED -A1 — IN 4 — 8 7 X1 — 8/18 7/18 -AX2 -AX2 — 67 68 — 21 /6.I7 RSB2A080F7 -K6 — 24 22 — 67 67

5050143211 — Software-beschreibung Master /4.B3 /4.C5 — HYD PUMP No.2 RUN OP -A1 — IN 8 / OUT 8 — 18 17 X1 — 18/18 17/18 -AX2 -AX2 — 69 69 70 — A1 -K7 PLC_RSC_12VDC /6.D11 A2 — 69 69 69

-K7 /6.C10 14 12 /6.B3 11

Changing drawing only in the E3!	3							Date	Name	TEREX	Type M.-Nr.:	Description: T4 DUAL POWER AC PANEL (37KW+37KW)	Assignment
	2												Location
	1						User						
	0		FIRSTDRAFT	23.5.12	CD		Proved					Drawing number 60552415.0	Sheet 6
	Revision	ECO	Revision text	Date	Name								No. 7 Sh.

For this document and the object represented in that we reserve all rights according to DIN 34.
Duplication announcement onto third party or utilization of his contents are without forbidden to our.

5050143211

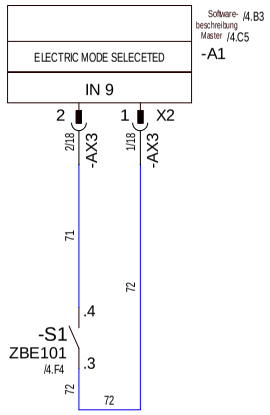

5050143211

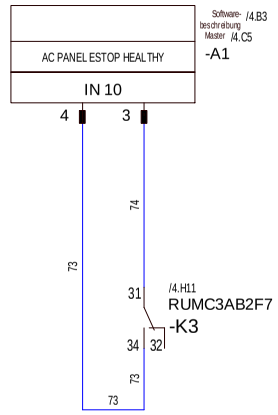

5050143211

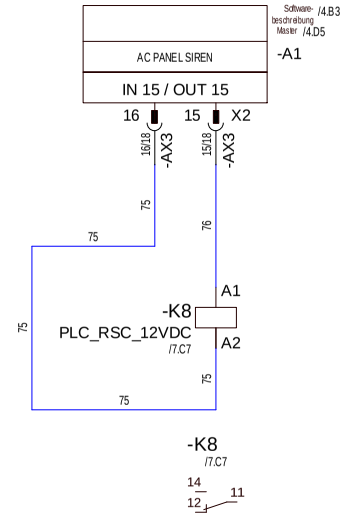

Changing drawing only in the E3!	3						Date	Name	TEREX	Type M.-Nr.:	Description: T4 DUAL POWER AC PANEL (37KW+37KW)	Assignment
	2											Location
	1					User					Drawing number 60552415.0	Sheet 7
	0		FIRSTDRAFT	23.5.12	CD	Proved						No. 7 Sh.
	Revision	ECO	Revision text	Date	Name							

(6) Hydraulic Diagrams

(a) Tier 3 - 2 Deck Schematics

C* - CHASSIS BULKHEAD NUMBER
P* - POWER UNIT BULKHEAD NUMBER
M* - MANIFOLD NUMBER

PUNIT BULKHEAD

OPT 1

OPT 2

OPT 3

OPT 4

OPT 5

OPT 6

M1
INTERNAL PUNIT MANIFOLD RETURN
TO TANK
12990240

USED WITH QUAD PUMP ONLY

USED WITH QUAD PUMP ONLY

SEE STD TIPPING GRID OPT /
VIBRATING GRID OPTIONS

APPLICABLE TO VIB GRID ONLY

RHS CONV
2FV2V - 03220115

LHS CONV
2FV2V - 03220115

13260150

RHS CONV 03220025

400CC

M1

M2

LHS CONV 02220225

3000 PSI
SDM140
CARRY OVER - 12090365

SIDE CONS

2250 PSI
SD14
12090363

FEEDER

SEE CV OPTIONS FOR
CV113/CV114

FEEDER JAX/KNG LEGS

MAIN CONVEYOR RAM

PTO
2200RPM

2FV2V - 03220115

160CC
FEEDER

FEEDER REMOTE
START/STOP

PUNIT BULKHEAD

SEE ROLL IN BOGIE OPTIONS

SDS C/W CARRYOVER
2662961*

SCREEN
TENSIONING

LHS CONV FOLD

LHS

RHS

SCREEN RAISE
RAMS

TAIL CONV FOLD

TAIL CONV
RAISE/LOWER

RHS CONV FOLD

REV	CHANGE DETAILS	BY	DATE	ECO	FROM	TO
					SERIAL NUMBER	
9	SCREEN MOTOR PART NUMBER AND CC CORRECTED FOR 3-DECK MACHINE	[redacted]	23/04/18	15946		
8	PART NUMBERS CORRECTED, HOSE NUMBERS REMOVED AND GENERAL TIDY UP OFF DIAGRAM	[redacted]	14/11/16	15065		
7	SCREEN BOX PRESSURE RELIEF SET FROM 3000PSI TO 2700PSI ON 2 DECK MACHINES ONLY	[redacted]	07/09/16	14981		

© THIS DOCUMENT IS THE COPYRIGHT OF TEREX GB. IT MUST NOT BE LOANED, COPIED OR REPRODUCED WITHOUT THE WRITTEN PERMISSION OF THE COMPANY.

TEREX
Materials Processing

DRAWN BY MCCOLGANR
APPROVED BY MCWILLIAMSP

DESCRIPTION
CH1700 HYDRAULIC CIRCUIT
CAT C4.4 T3 2 DECK

FORMAT A3 | SHEET 1 | PULSE ID CH1700-1003 | REVISION 9

C* - CHASSIS BULKHEAD NUMBER
P* - POWER UNIT BULKHEAD NUMBER
M* - MANIFOLD NUMBER

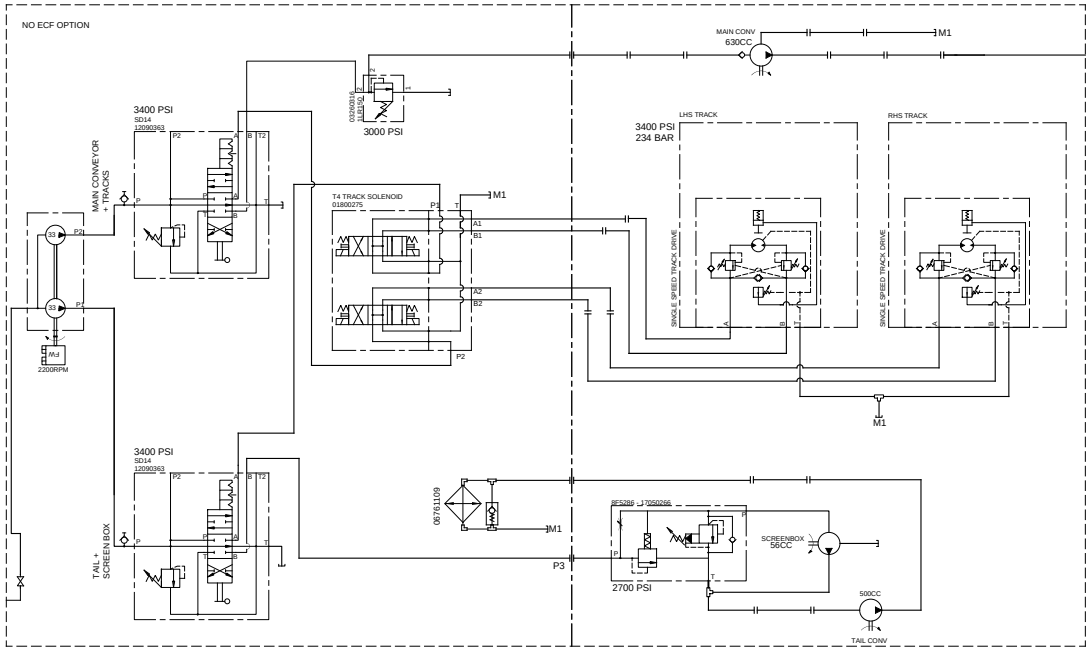

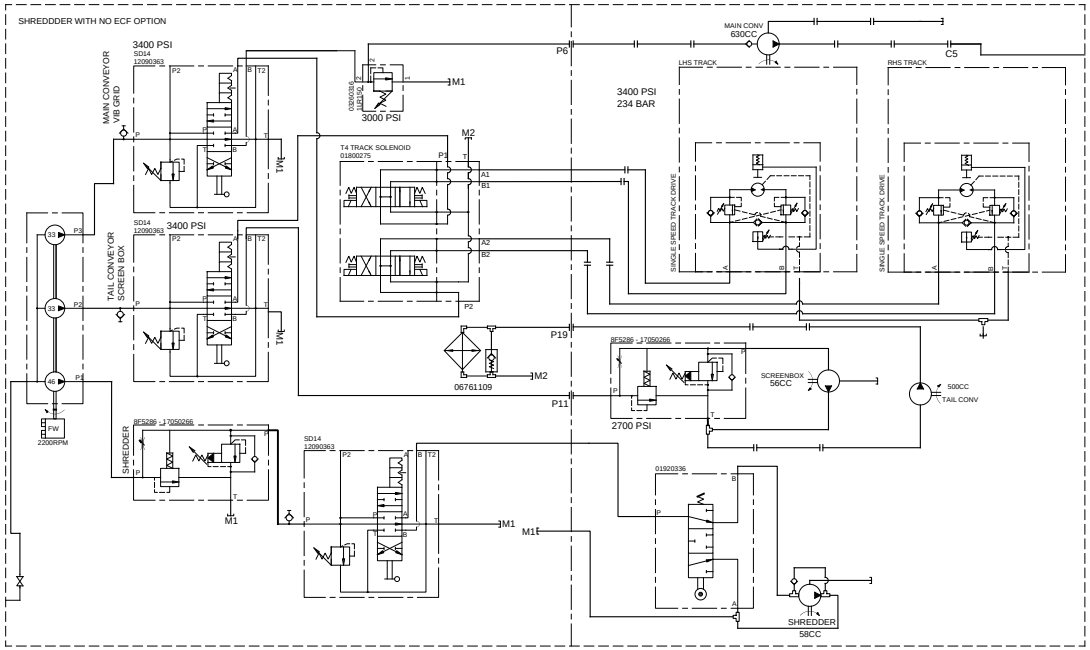

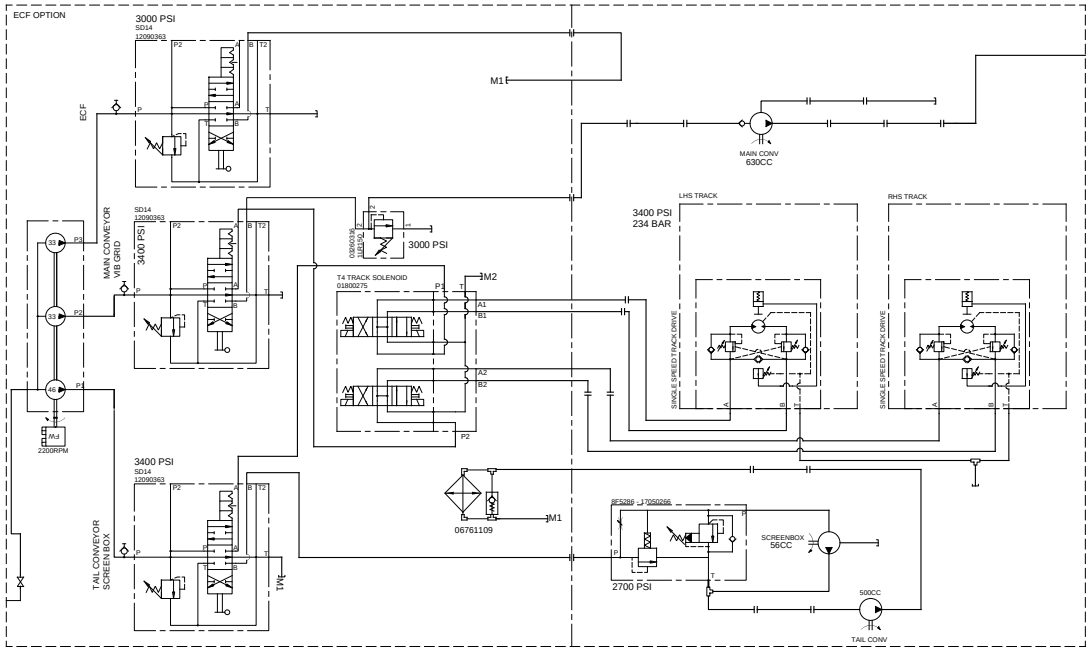

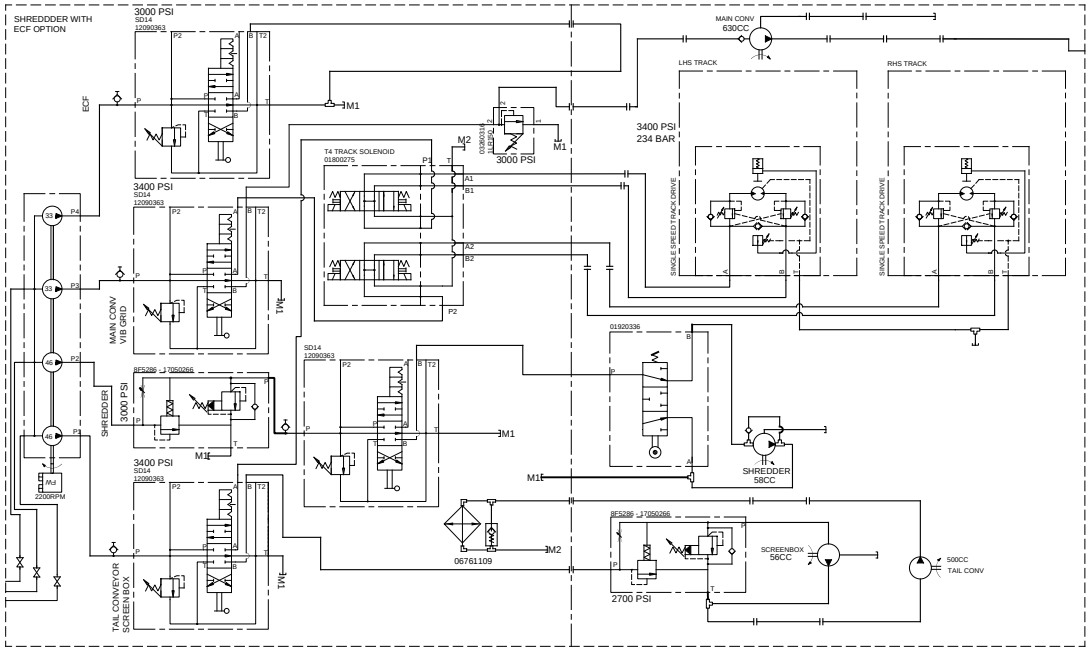

OPT 2

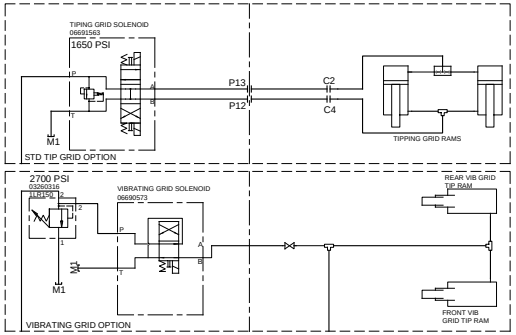

OPT 5

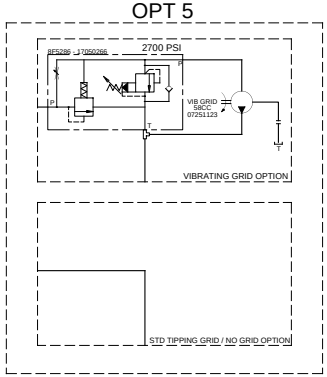

3400 PSI
234 BAR

Tracks single speed only currently

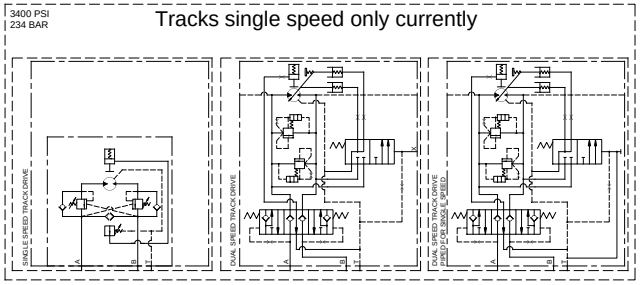

OPT 3

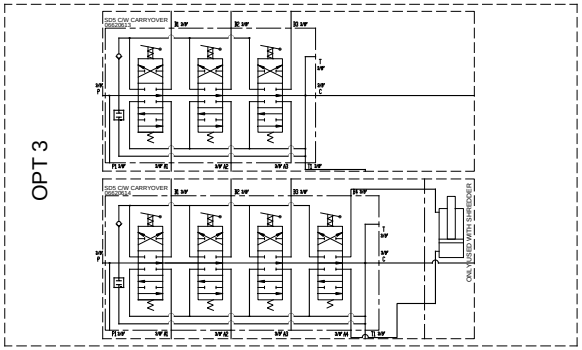

OPT 6

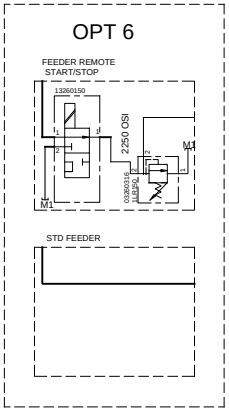

OPT 4

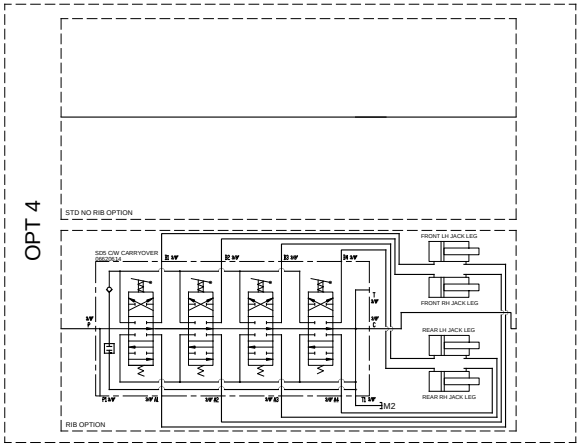

(b) Tier 3 - 3 Deck Schematics

C* - CHASSIS BULKHEAD NUMBER
P* - POWER UNIT BULKHEAD NUMBER
M* - MANIFOLD NUMBER

PUNIT BULKHEAD

OPT 1

OPT 2

OPT 3

OPT 4

OPT 5

M1
INTERNAL PUNIT MANIFOLD RETURN
TO TANK
12990240

USED WITH QUAD PUMP ONLY

USED WITH QUAD PUMP ONLY

SEE STD TIPPING GRID OPT / VIBRATING GRID OPTIONS

APPLICABLE/TO VIB GRID ONLY

RHS CONV
2FV2V - 03220115

400CC
RHS CONV
02220225

M2

3000 PSI
SDM140
CARRY OVER - 12090365

M1

RHS CONV

3000 PSI
SD14
12090363

LHS + AUX CONS

13260150

LHS CONV
2FV2V - 03220115

400CC
LHS CONV 02220225

2FV2V - 03220115

400CC

M2

FEEDER JACKING LEGS

MAIN CONVEYOR RAM

SDS C/W CARRYOVER
09620811

SCREEN TENSIONING

SDS C/W CARRYOVER
09620812

AUX CONV LOWER RAM

AUX CONV UPPER RAM

LHS CONV FOLD

LHS

RHS

SCREEN RAISE RAMS

M2

SDS C/W CARRYOVER
09620813

TAIL CONV FOLD

LHS

RHS

TAIL CONV RAISE/LOWER

RHS CONV FOLD

SEE ROLL IN BOGIE OPTIONS

REV	CHANGE DETAILS	BY	DATE	ECO	FROM	TO
					SERIAL NUMBER	
9	SCREEN MOTOR PART NUMBER AND CC CORRECTED FOR 3-DECK MACHINE	[redacted]	23/04/18	15946		
8	PART NUMBERS CORRECTED, HOSE NUMBERS REMOVED AND GENERAL TIDY UP OFF DIAGRAM	[redacted]	14/11/16	15065		
7	SCREEN BOX PRESSURE RELIEF SET FROM 3000PSI TO 2700PSI ON 2 DECK MACHINES ONLY	[redacted]	07/09/16	14981		

© THIS DOCUMENT IS THE COPYRIGHT OF TEREX GB. IT MUST NOT BE LOANED, COPIED OR REPRODUCED WITHOUT THE WRITTEN PERMISSION OF THE COMPANY.

TEREX
Materials Processing

DESCRIPTION
CH1700 HYDRAULIC CIRCUIT
CAT C4.4 T3 3 DECK HYD AUX

DRAWN BY	APPROVED BY	FORMAT	SHEET	PULSE ID	REVISION
MCCOLGANR	MCWILLIAMSP	A3	1	CH1700-1003	9

C* - CHASSIS BULKHEAD NUMBER
P* - POWER UNIT BULKHEAD NUMBER
M* - MANIFOLD NUMBER

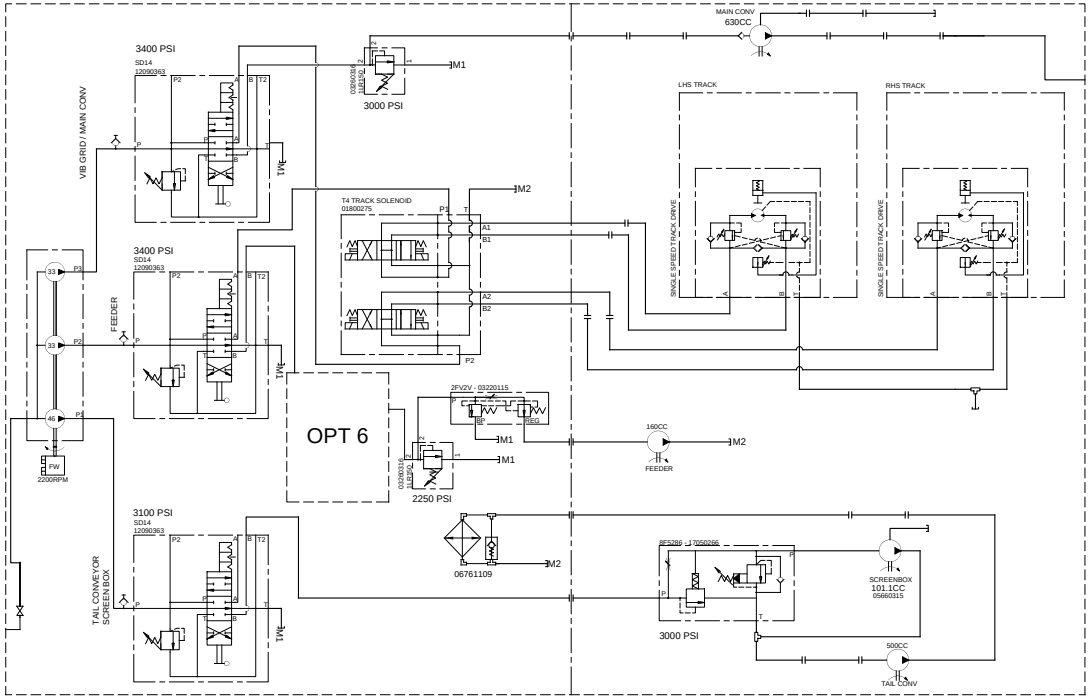

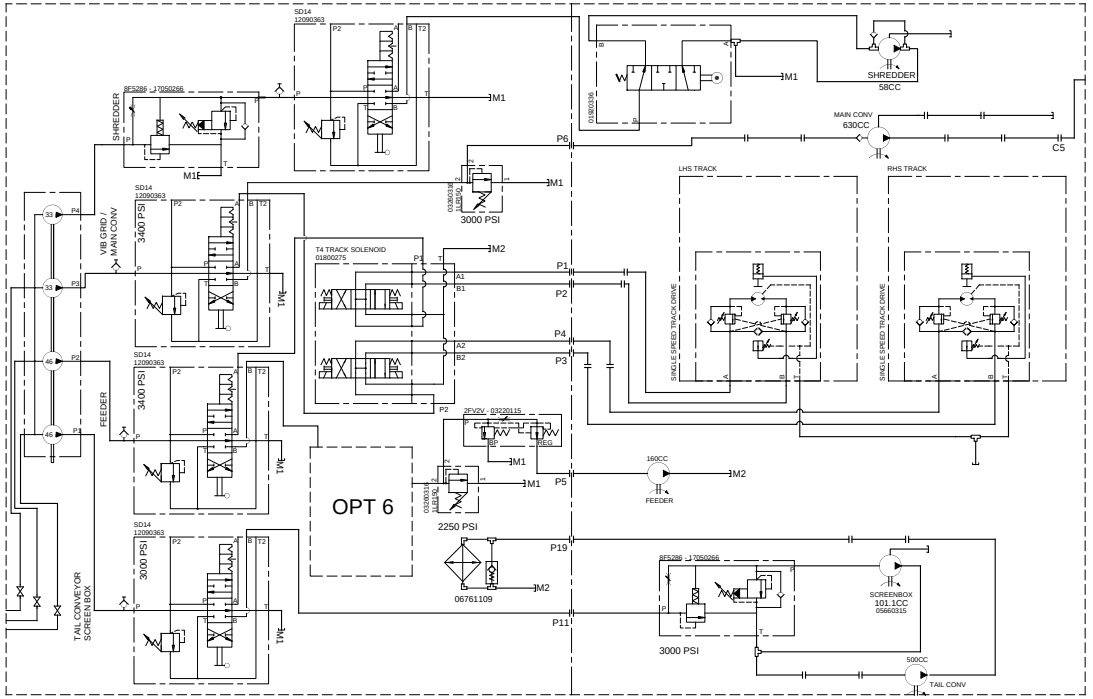

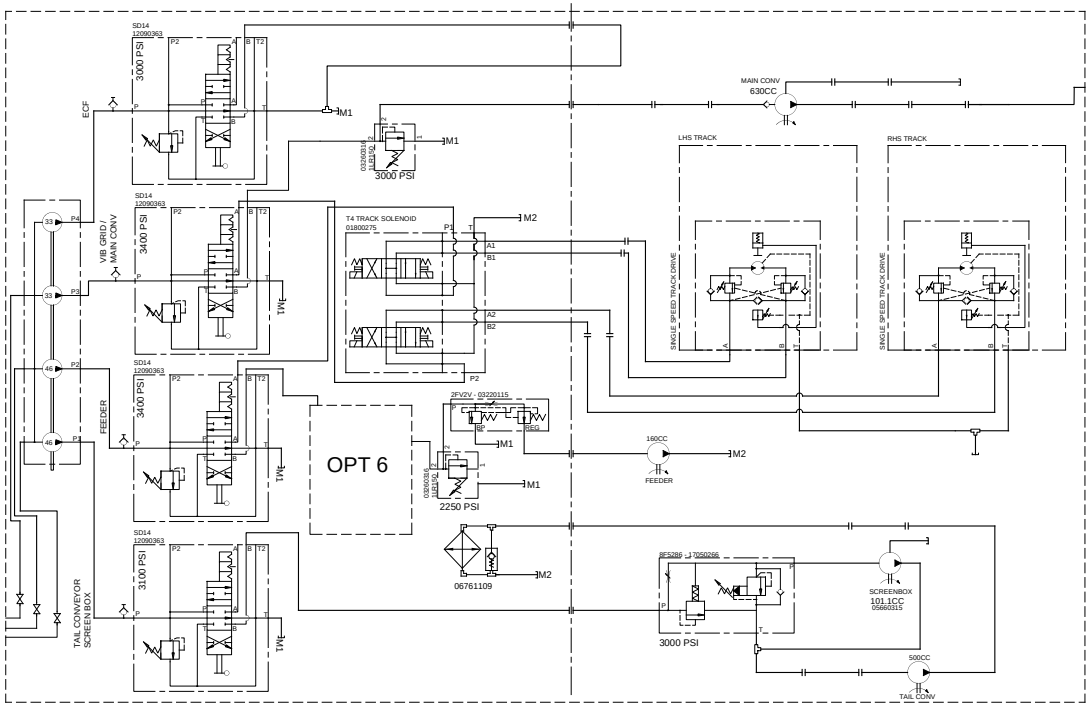

OPT 2

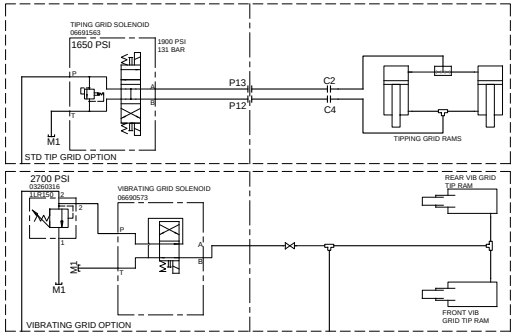

OPT 5

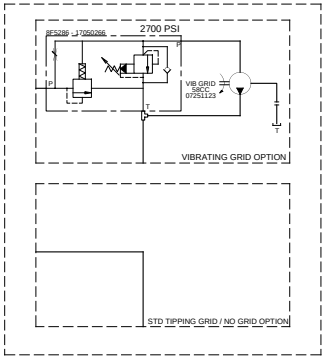

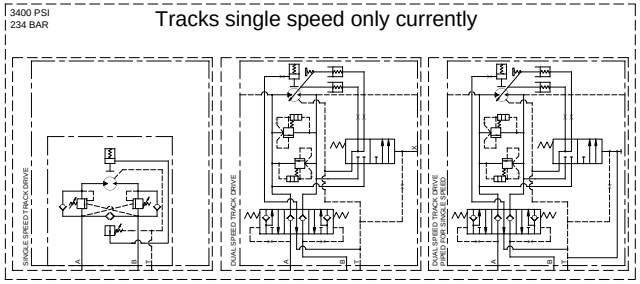

OPT 3

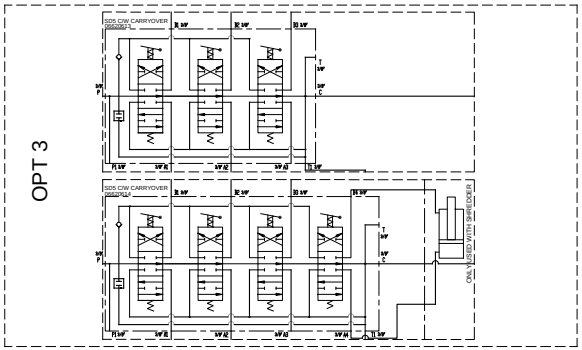

OPT 6

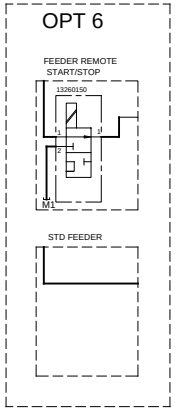

OPT 4

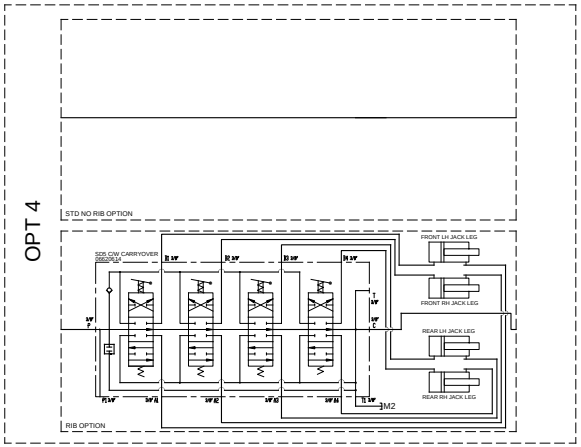

(c) Tier 4 - 2 Deck Schematics

C* - CHASSIS BULKHEAD NUMBER
P* - POWER UNIT BULKHEAD NUMBER
M* - MANIFOLD NUMBER

PUNIT BULKHEAD

OPT 1

OPT 5

SEE PUMP CONFIGURATIONS SHEET 2

OPT 2

SEE STD TIPPING GRID OPT / VIBRATING GRID OPTIONS

APPLICABLE TO VIB GRID ONLY

USED WITH QUAD PUMP ONLY

USED WITH QUAD PUMP ONLY

RHS CONV
2FV2V - 03220115

LHS CONV
2FV2V - 03220115

13260150

400CC
RHS CONV 03220025

400CC
LHS CONV 02220225

M1

M2

3000 PSI
SDM140
CARRY OVER - 12090365

SIDE CONS

2250 PSI
SD14
12090363

FEEDER

OPT 3

OPT 6

FEEDER REMOTE START/STOP

2FV2V - 03220115

160CC
FEEDER

PUNIT BULKHEAD

FEEDER JAWS/KNG LEGS

MAIN CONVEYOR RAM

PTO
2200RPM

M1
INTERNAL PUNIT MANIFOLD RETURN TO TANK
12990625

M2
EXTERNAL PUNIT MANIFOLD RETURN TO TANK
12990627

SDS CW CARRYOVER
3003011

SCREEN TENSIONING

SDS CW CARRYOVER
3003012

LHS CONV FOLD

LHS

RHS

SCREEN RAISE RAMS

SDS CW CARRYOVER
3003013

TAIL CONV FOLD

TAIL CONV RAISE/LOWER

RHS CONV FOLD

OPT 4

SEE ROLL IN BOGIE OPTIONS

REV	CHANGE DETAILS	BY	DATE	ECO	FROM	TO
					SERIAL NUMBER	
9	SCREEN MOTOR PART NUMBER AND CC CORRECTED FOR 3-DECK MACHINE	[redacted]	23/04/18	15946		
8	PART NUMBERS CORRECTED, HOSE NUMBERS REMOVED AND GENERAL TIDY UP OFF DIAGRAM	[redacted]	14/11/16	15065		
7	SCREEN BOX PRESSURE RELIEF SET FROM 3600PSI TO 8700PSI ON 2 DECK MACHINES ONLY	[redacted]	07/09/16	14981		

© THIS DOCUMENT IS THE COPYRIGHT OF TEREX GB. IT MUST NOT BE LOANED, COPIED OR REPRODUCED WITHOUT THE WRITTEN PERMISSION OF THE COMPANY.

TEREX Materials Processing

DESCRIPTION
CH1700 HYDRAULIC CIRCUIT
CAT C4.4 T4 2 DECK

DRAWN BY	APPROVED BY	FORMAT	SHEET	PULSE ID	REVISION
MCCOLGANR	MCWILLIAMSP	A3	1	CH1700-1003	9

C* - CHASSIS BULKHEAD NUMBER
P* - POWER UNIT BULKHEAD NUMBER
M* - MANIFOLD NUMBER

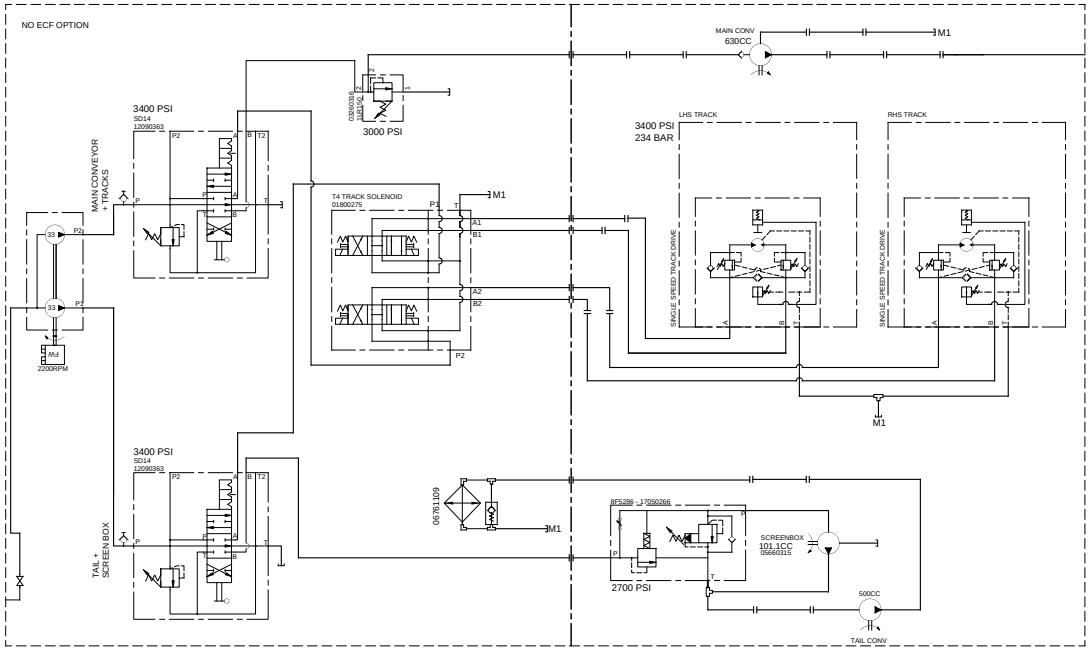

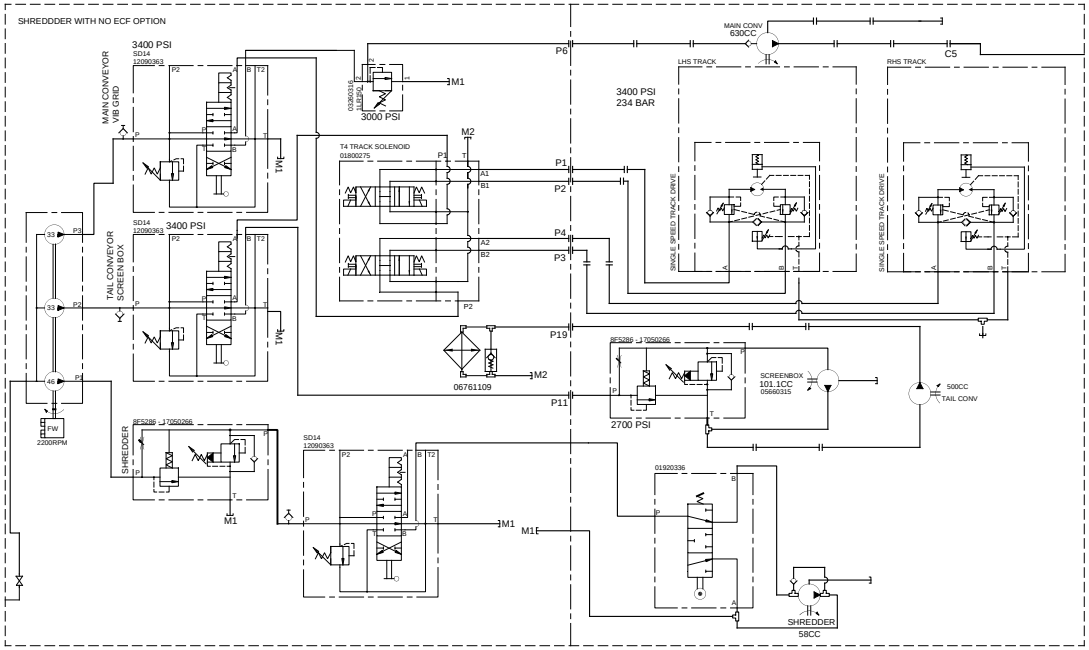

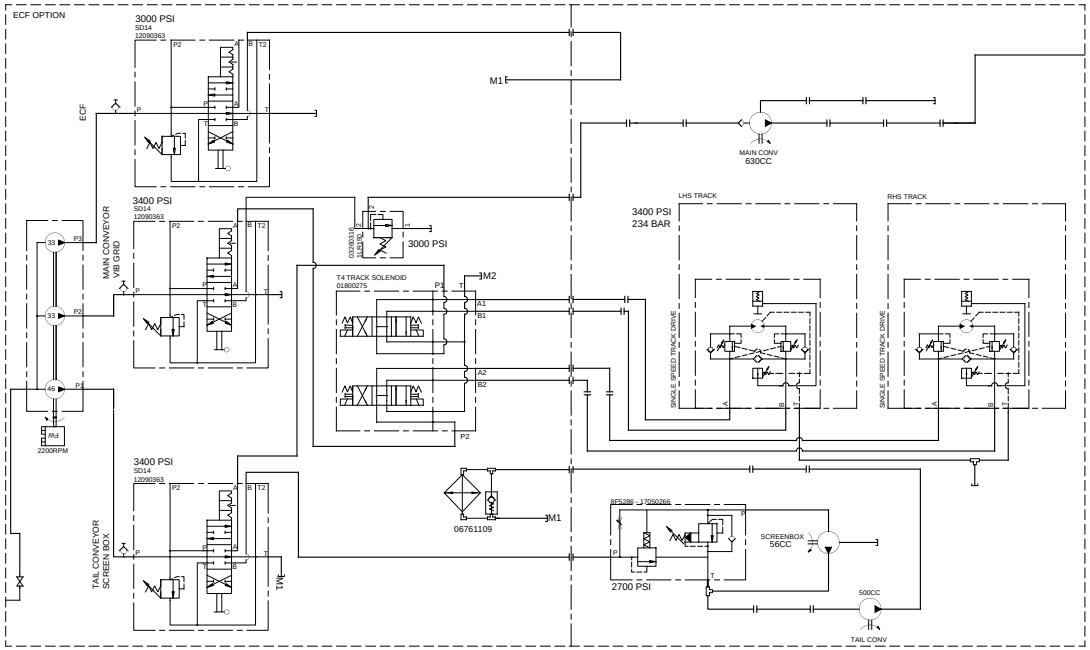

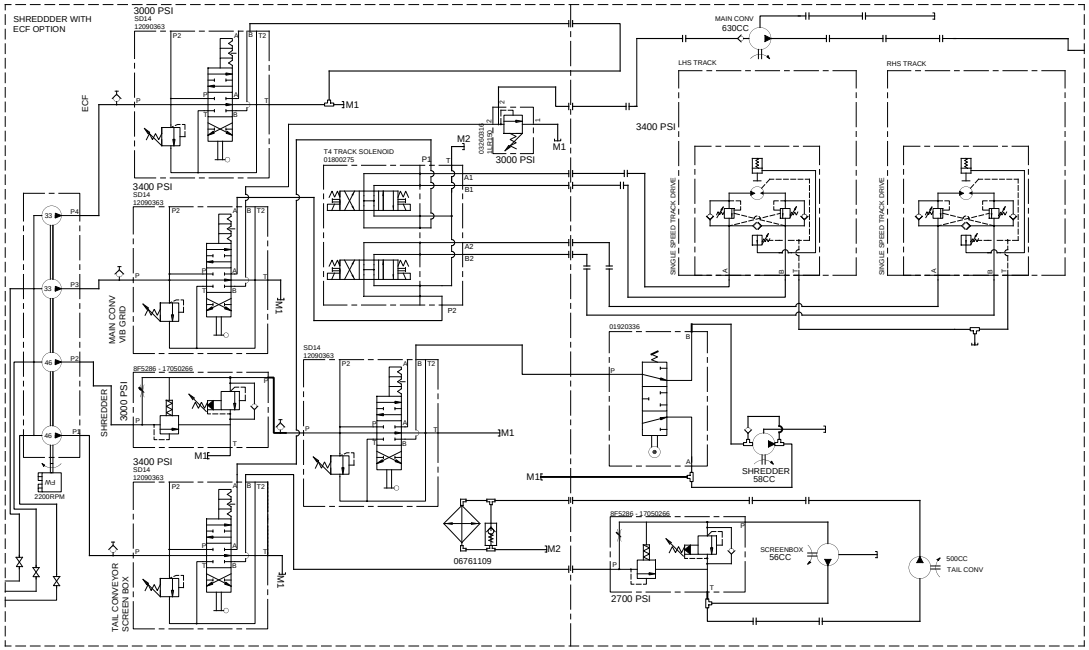

OPT 2

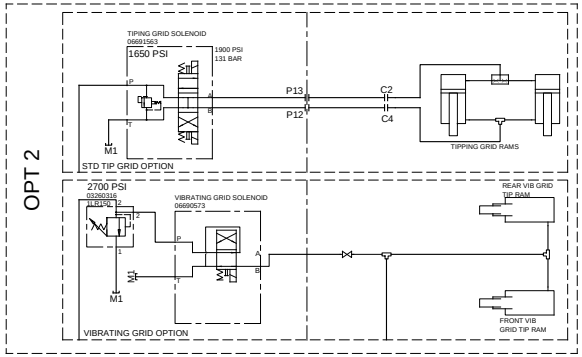

OPT 5

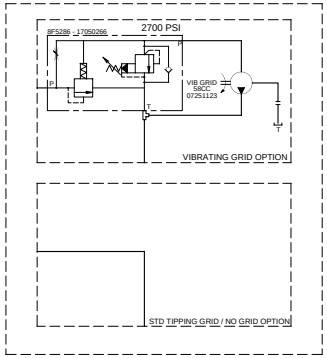

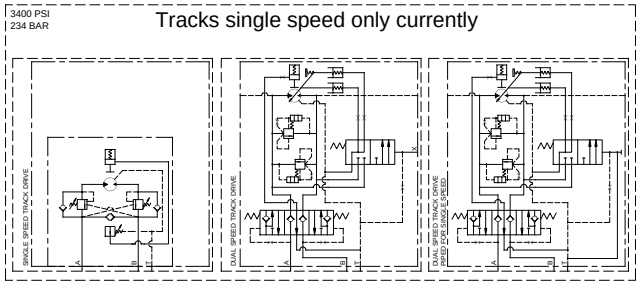

OPT 3

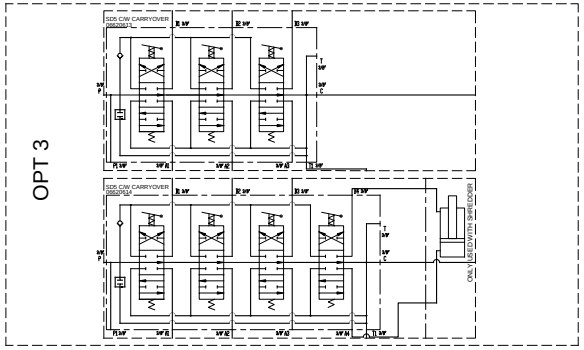

OPT 6

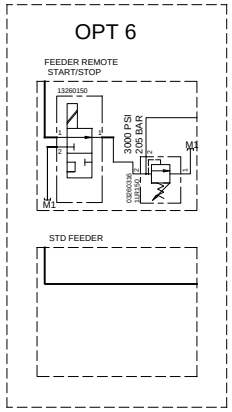

OPT 4

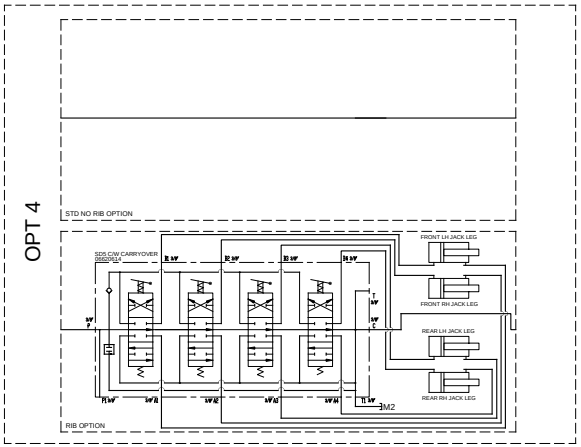

(d) Tier 4 - 3 Deck Schematics

C* - CHASSIS BULKHEAD NUMBER
P* - POWER UNIT BULKHEAD NUMBER
M* - MANIFOLD NUMBER

PUNIT BULKHEAD

OPT 1

OPT 2

OPT 3

OPT 4

OPT 5

M1
INTERNAL PUNIT MANIFOLD RETURN
TO TANK
12990240

USED WITH QUAD PUMP ONLY

USED WITH QUAD PUMP ONLY

SEE STD TIPPING GRID OPT /
VIBRATING GRID OPTIONS

APPLICABLE ITO VIB GRID ONLY

RHS CONV
2FV2V - 0322011S

400CC
RHS CONV
02220225

3000 PSI
SDM140
CARRY OVER - 12090365

RHS CONV

3000 PSI
SD14
12090363

LHS + AUX CONS

13260150

LHS CONV
2FV2V - 0322011S

400CC
LHS CONV 02220225

2FV2V - 0322011S

400CC

FEEDER JAXX/KG LEGS

MAIN CONVEYOR RAM

PTO
2200RPM

12990639

M1
INTERNAL PUNIT MANIFOLD RETURN
TO TANK
12990625

M2
EXTERNAL PUNIT MANIFOLD
RETURN TO TANK
12990627

SEE ROLL IN BOGIE OPTIONS

SD5 C/W CARRYOVER
29020611

SCREEN
TENSIONING

SD5 C/W CARRYOVER
29020614

AUX CONV LOWER RAM

AUX CONV UPPER RAM

LHS CONV FOLD

LHS

RHS

SCREEN RAISE
RAMS

SD5 C/W CARRYOVER
29020617

TAIL CONV FOLD

LHS

RHS

TAIL CONV
RAISE/LOWER

RHS CONV FOLD

REV	CHANGE DETAILS	BY	DATE	ECO	FROM	TO
					SERIAL NUMBER	
9	SCREEN MOTOR PART NUMBER AND CC CORRECTED FOR 3-DECK MACHINE	[redacted]	23/04/18	15946		
8	PART NUMBERS CORRECTED. HOSE NUMBERS REMOVED AND GENERAL TIDY UP OFF DIAGRAM	[redacted]	14/11/16	15065		
7	SCREEN BOX PRESSURE RELIEF SET FROM 3600PSI TO 2760PSI ON 2 DECK MACHINES ONLY	[redacted]	07/09/16	14981		

© THIS DOCUMENT IS THE COPYRIGHT OF TEREX GB. IT MUST NOT BE LOANED, COPIED OR REPRODUCED WITHOUT THE WRITTEN PERMISSION OF THE COMPANY.

TEREX
Materials Processing

DESCRIPTION
CH1700 HYDRAULIC CIRCUIT
CAT C4.4 T4 3 DECK HYD AUX

DRAWN BY	APPROVED BY	FORMAT	SHEET	PULSE ID	REVISION
MCCOLGANR	MCWILLIAMSP	A3	1	CH1700-1003	9

C* - CHASSIS BULKHEAD NUMBER
P* - POWER UNIT BULKHEAD NUMBER
M* - MANIFOLD NUMBER

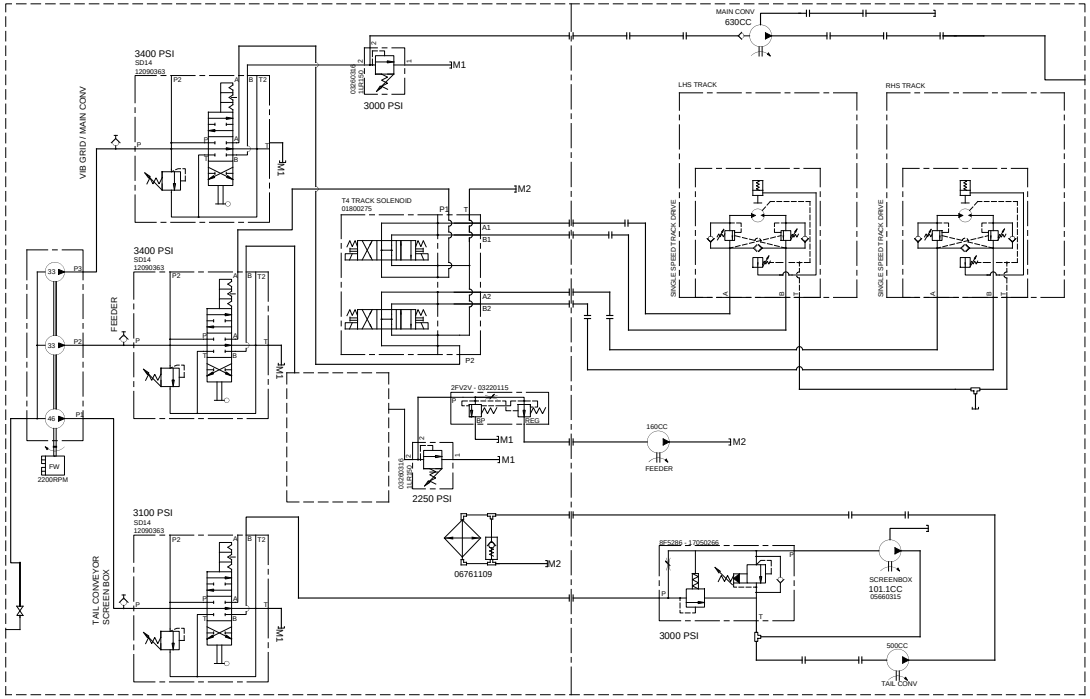

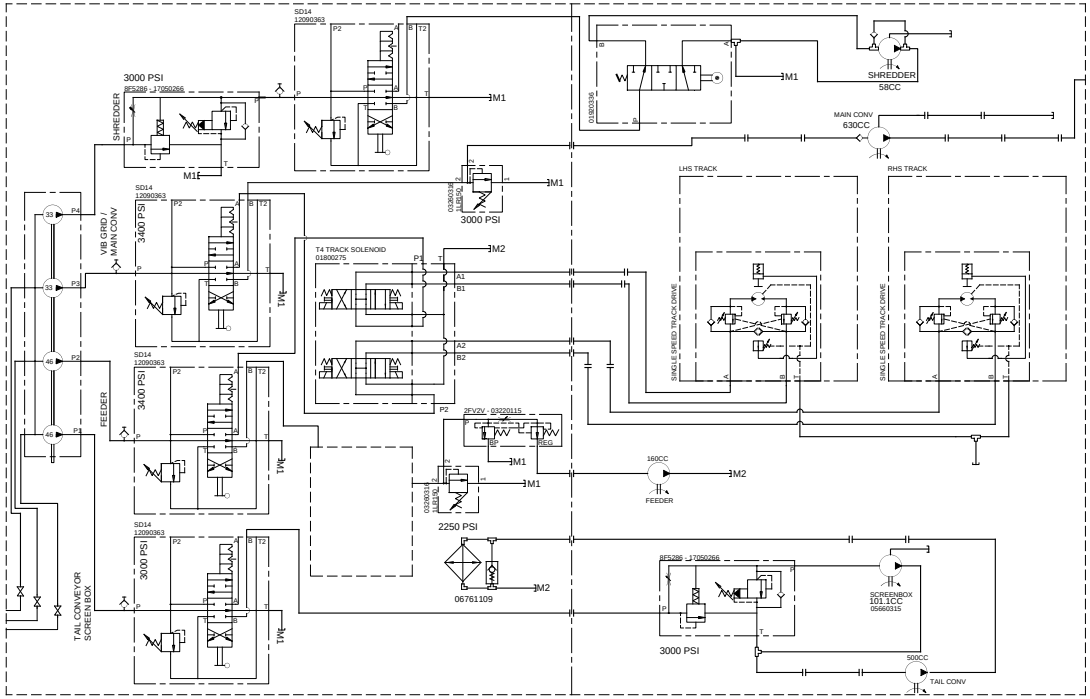

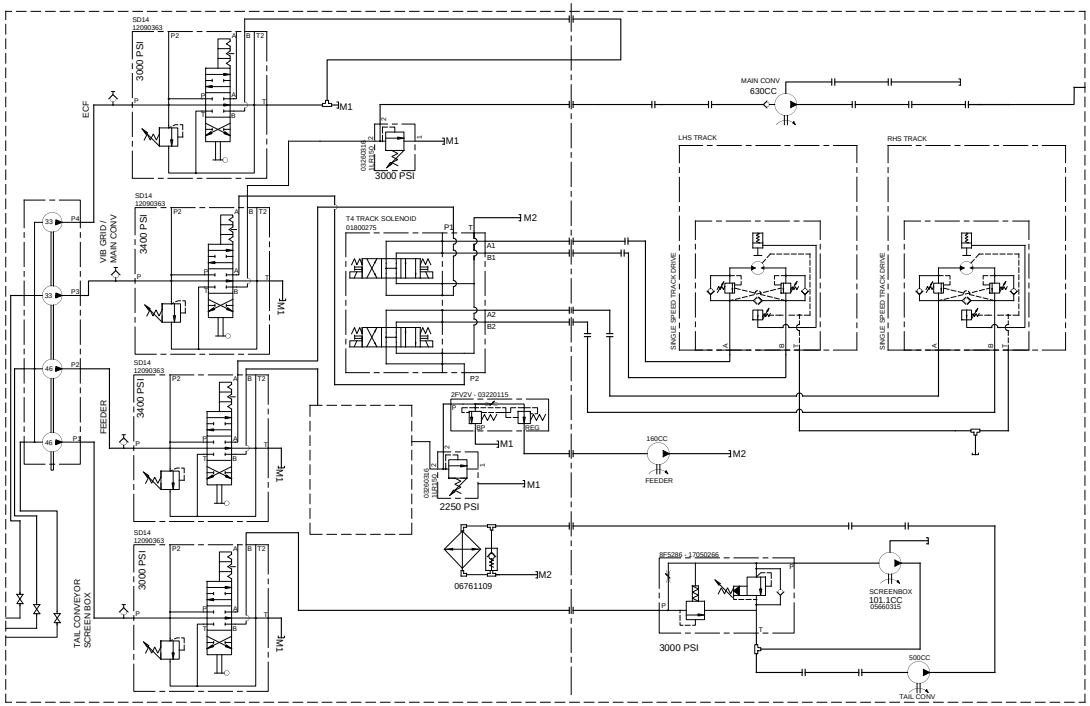

OPT 2

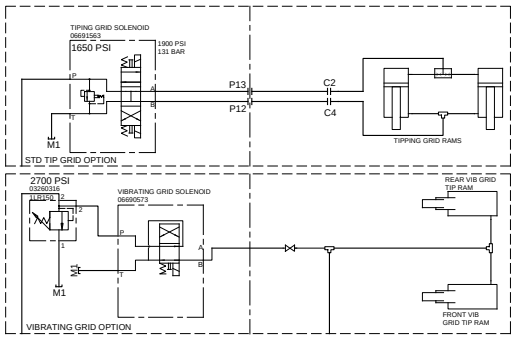

OPT 5

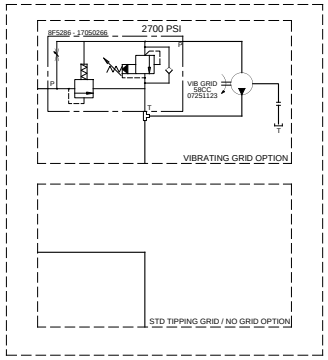

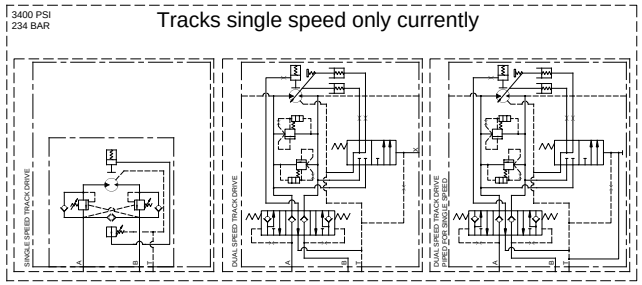

OPT 3

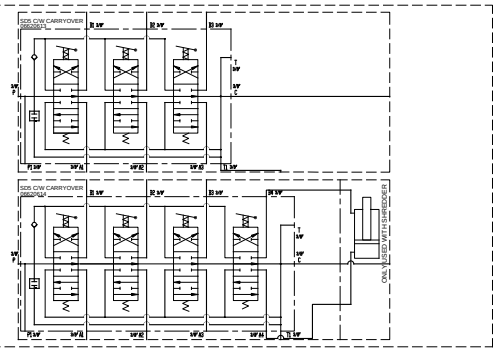

OPT 6

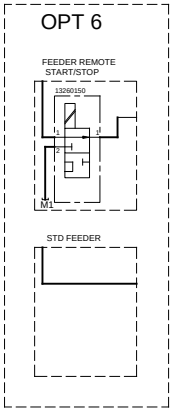

OPT 4

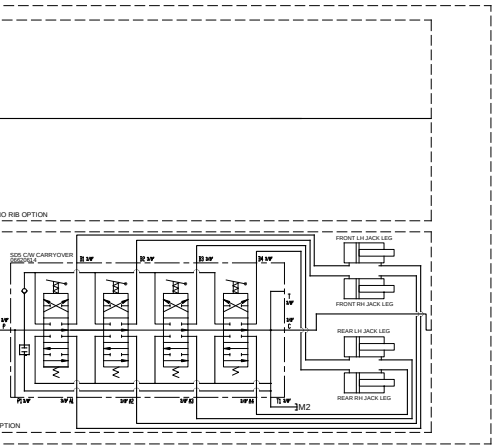

(e) Constant Speed 2 Deck Schematics

C* - CHASSIS BULKHEAD NUMBER
P* - POWER UNIT BULKHEAD NUMBER
M* - MANIFOLD NUMBER

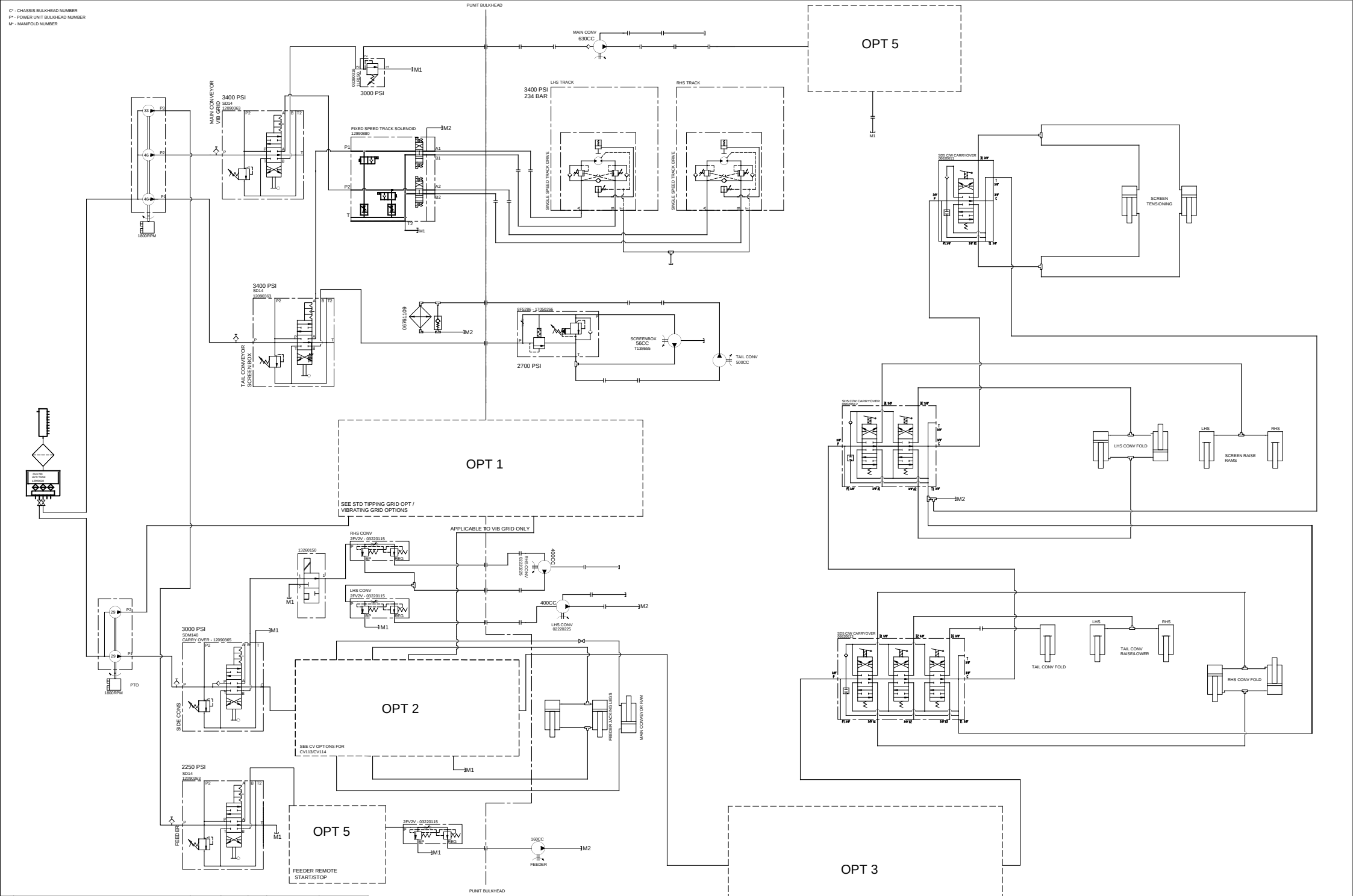

REV	CHANGE DETAILS	BY	DATE	ECO	FROM	TO
9	SCREEN MOTOR PART NUMBER AND CC CORRECTED FOR 3-DECK MACHINE	[redacted]	23/04/18	15946		
8	PART NUMBERS CORRECTED, HOSE NUMBERS REMOVED AND GENERAL TIDY UP OFF DIAGRAM	[redacted]	14/11/16	15065		
7	SCREEN BOX PRESSURE RELIEF SET FROM 3000PSI TO 2700PSI ON 2 DECK MACHINES ONLY	[redacted]	07/09/16	14981		
					SERIAL NUMBER	

© THIS DOCUMENT IS THE COPYRIGHT OF TEREX GB. IT MUST NOT BE LOANED, COPIED OR REPRODUCED WITHOUT THE WRITTEN PERMISSION OF THE COMPANY.

TEREX Materials Processing

DESCRIPTION
CH1700 HYDRAULIC CIRCUIT
STAGE IIIA FIXED SPEED 2 DECK

DRAWN BY	APPROVED BY	FORMAT	SHEET	PULSE ID	REVISION
MCCOLGANR	MCWILLIAMSP	A3	1	CH1700-1003	9

C* - CHASSIS BULKHEAD NUMBER
P* - POWER UNIT BULKHEAD NUMBER
M* - MANIFOLD NUMBER

OPT 1

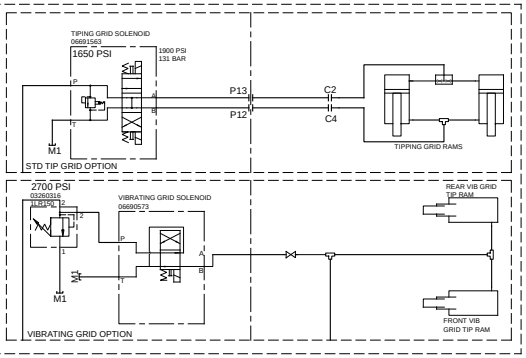

OPT 5

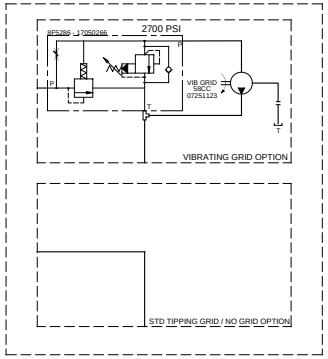

3400 PSI
234 BAR

Tracks single speed only currently

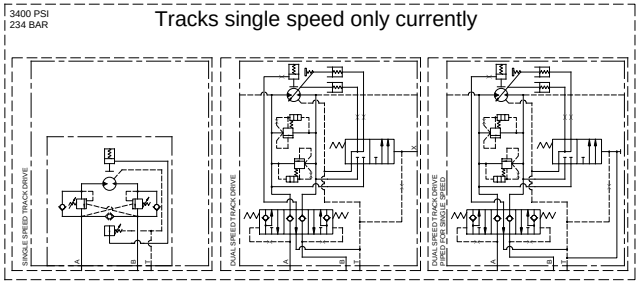

OPT 2

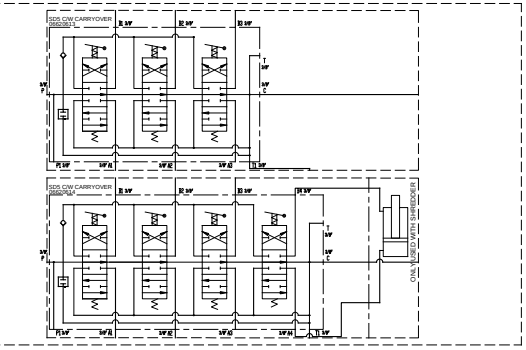

OPT 5

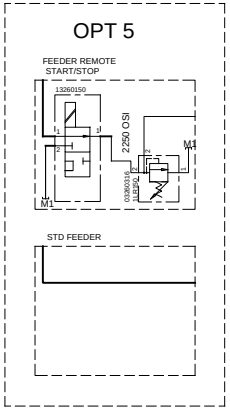

OPT 3

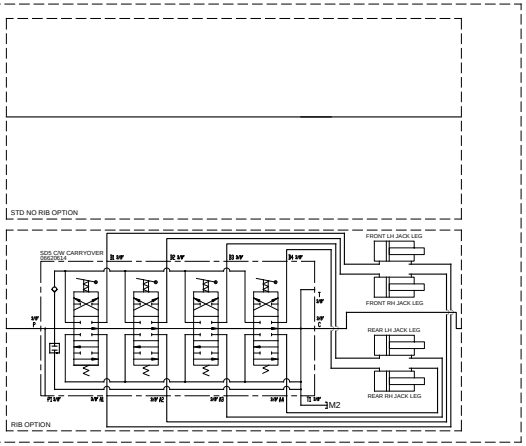

(f) Constant Speed 3 Deck Schematics

C* - CHASSIS BULKHEAD NUMBER
P* - POWER UNIT BULKHEAD NUMBER
M* - MANIFOLD NUMBER

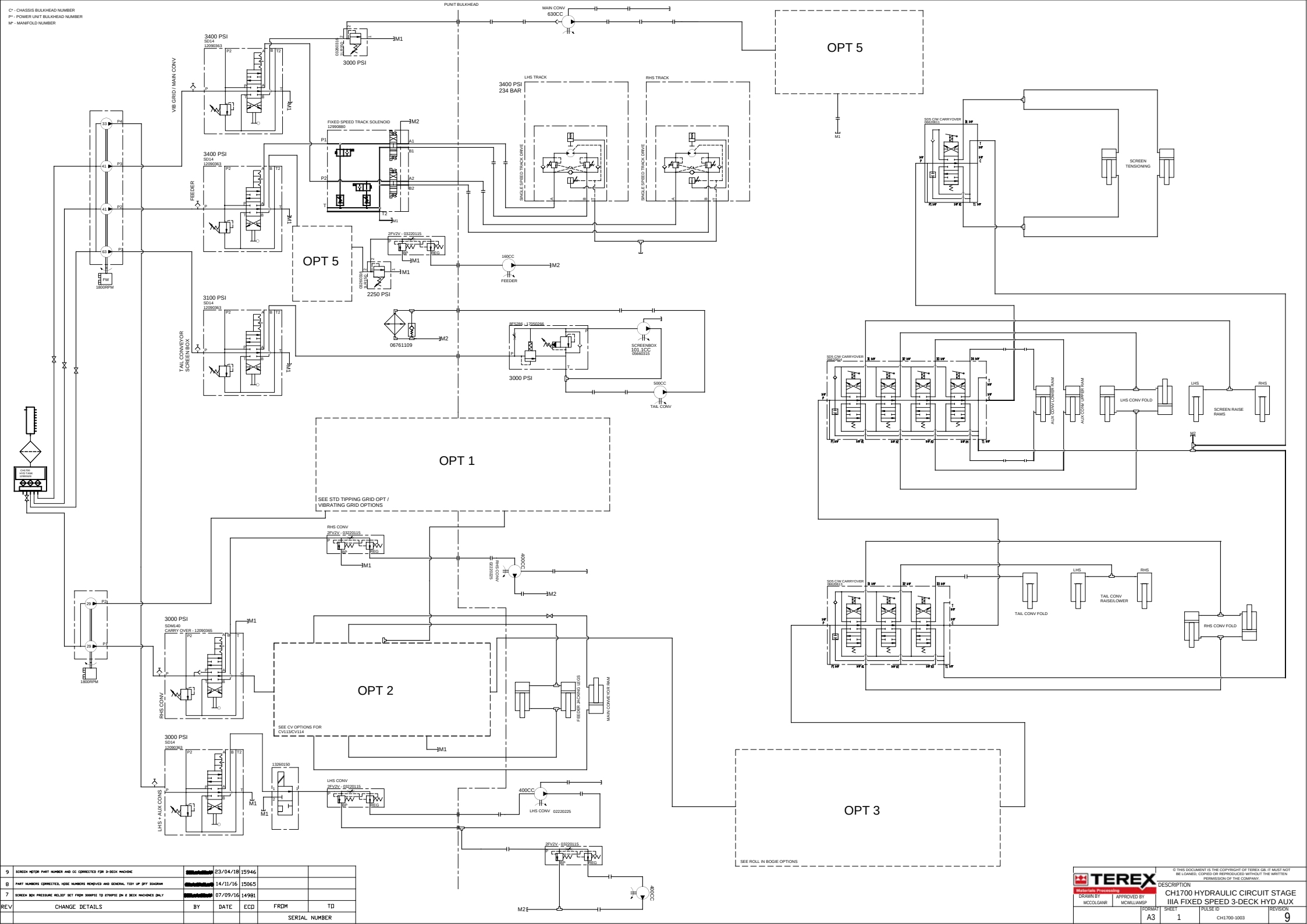

REV	CHANGE DETAILS	BY	DATE	ECO	FROM	TO
					SERIAL NUMBER	
9	SCREEN MOTOR PART NUMBER AND CC CORRECTED FOR 3-DECK MACHINE	[redacted]	23/04/18	15946		
8	PART NUMBERS CORRECTED, HOSE NUMBERS REMOVED AND GENERAL TIDY UP OFF DIAGRAM	[redacted]	14/11/16	15065		
7	SCREEN BOX PRESSURE RELIEF SET FROM 3000PSI TO 2700PSI ON 4 DECK MACHINES ONLY	[redacted]	07/09/16	14981		

© THIS DOCUMENT IS THE COPYRIGHT OF TEREX GB. IT MUST NOT BE LOANED, COPIED OR REPRODUCED WITHOUT THE WRITTEN PERMISSION OF THE COMPANY.

TEREX Materials Processing

DESCRIPTION
CH1700 HYDRAULIC CIRCUIT STAGE IIIA FIXED SPEED 3-DECK HYD AUX

DRAWN BY	APPROVED BY	FORMAT	SHEET	PULSE ID	REVISION
MCCOLGANR	MCWILLIAMSP	A3	1	CH1700-1003	9

C* - CHASSIS BULKHEAD NUMBER
P* - POWER UNIT BULKHEAD NUMBER
M* - MANIFOLD NUMBER

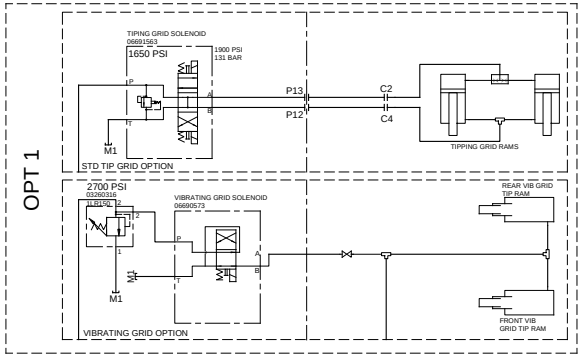

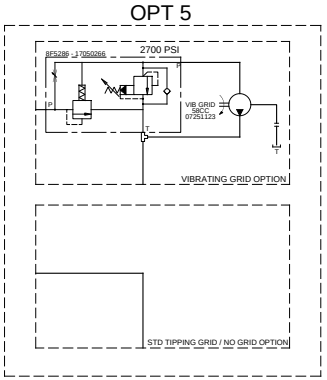

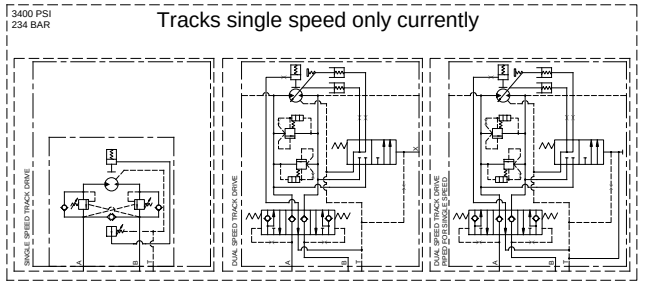

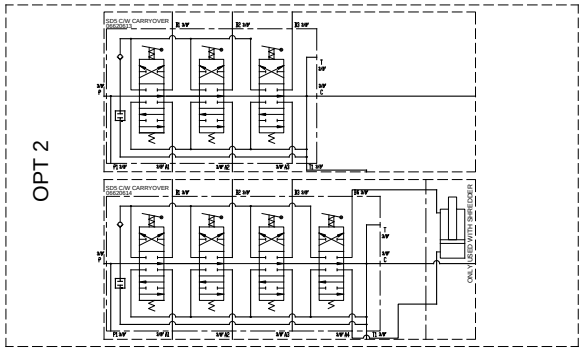

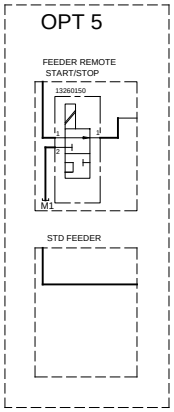

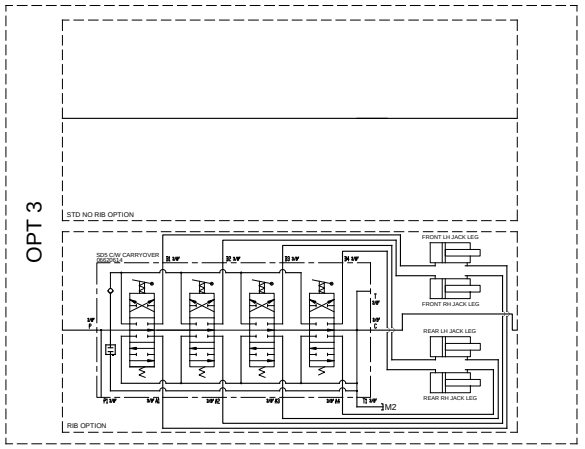

(g) Tier 3 Dual Power 2 Deck Tipping Grid Schematics

C* - CHASSIS BULKHEAD NUMBER
P* - POWERUNIT BULKHEAD NUMBER
M* - MANIFOLD NUMBER

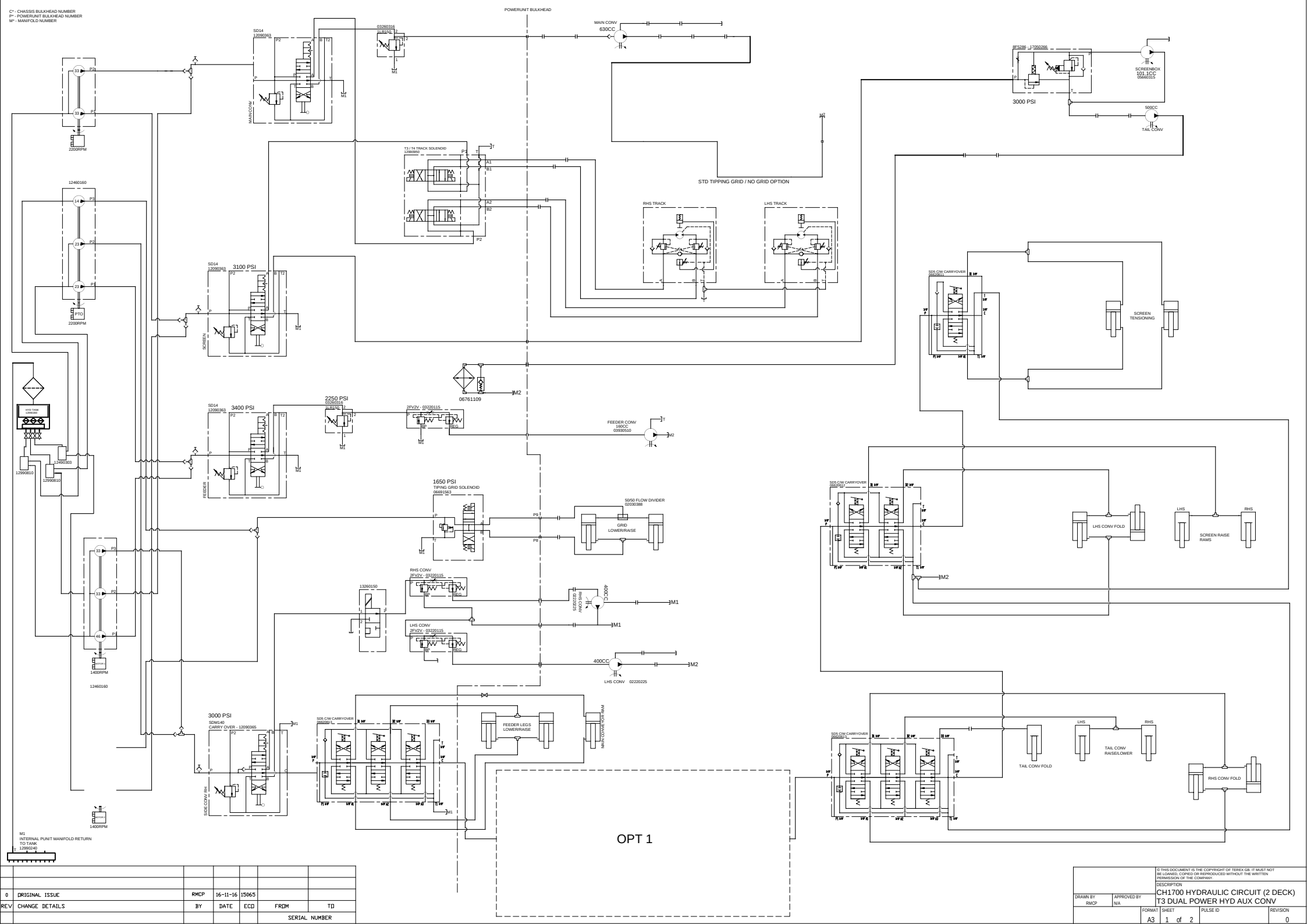

REV	DETAILS	BY	DATE	ECO	FROM	TO
0	ORIGINAL ISSUE	RMCP	16-11-16	15065		
					SERIAL NUMBER	

© THIS DOCUMENT IS THE COPYRIGHT OF TEREX GB. IT MUST NOT BE LOANED, COPIED OR REPRODUCED WITHOUT THE WRITTEN PERMISSION OF THE COMPANY.

DESCRIPTION
CH1700 HYDRAULIC CIRCUIT (2 DECK)
T3 DUAL POWER HYD AUX CONV

DRAWN BY	APPROVED BY	FORMAT	SHEET	PULSE ID	REVISION
RMCP	N/A	A3	1 of 2		0

OPT 1

STD NO RIB OPTION

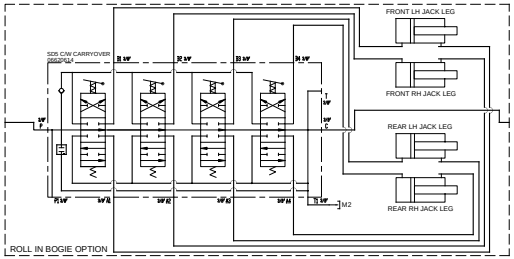

ROLL IN BOGIE OPTION

OPT 2

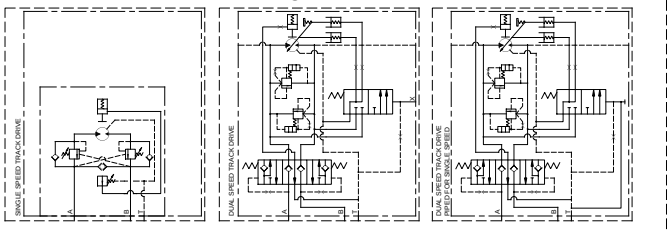

(h) Tier 3 Dual Power 3 Deck Tipping Grid Schematics

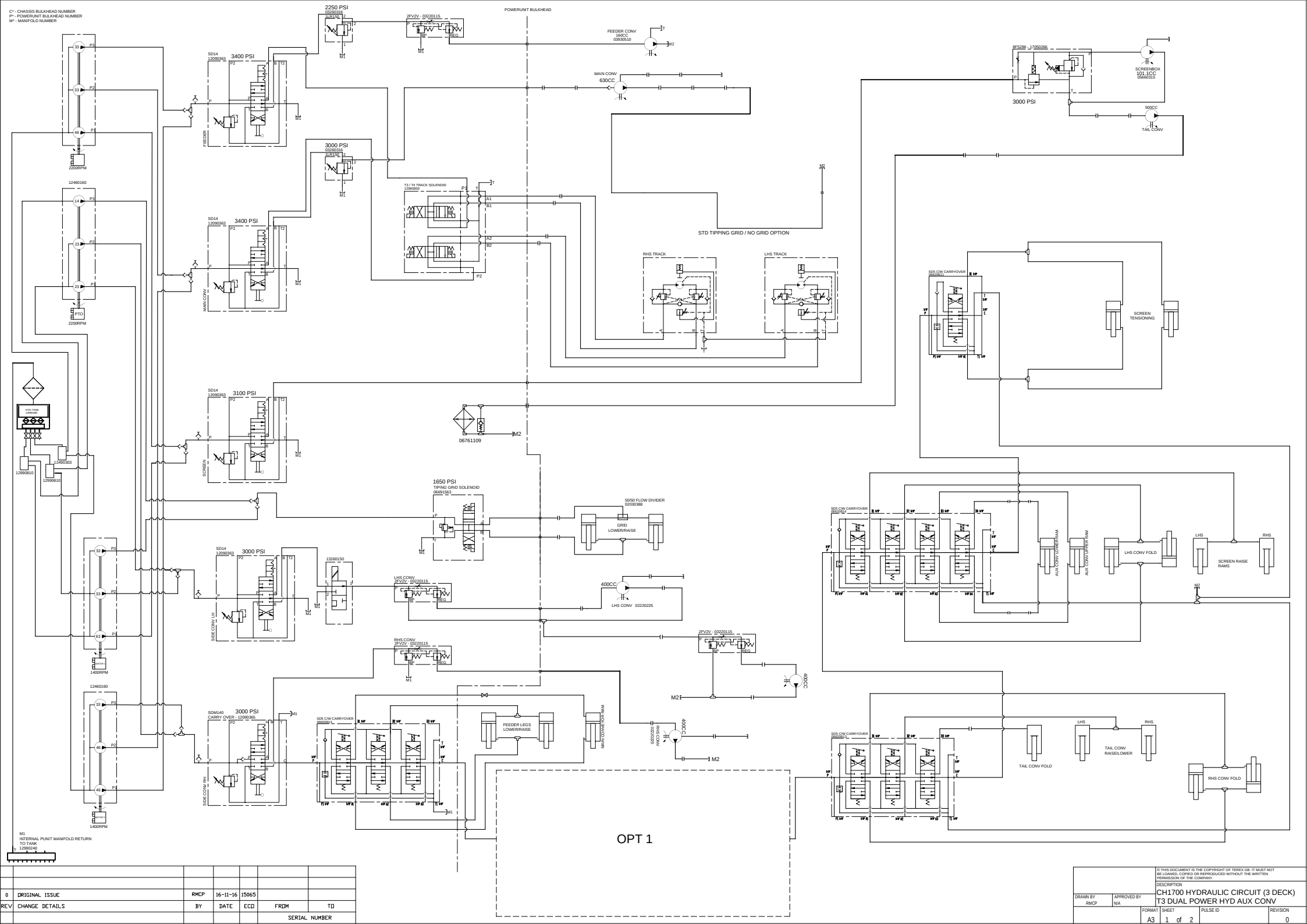

REV	DESCRIPTION	BY	DATE	ECO	FROM	TO
0	ORIGINAL ISSUE	RMCP	16-11-16	15065		
					SERIAL NUMBER	

© THIS DOCUMENT IS THE COPYRIGHT OF TEREX GB. IT MUST NOT BE LOANED, COPIED OR REPRODUCED WITHOUT THE WRITTEN PERMISSION OF THE COMPANY.

DESCRIPTION
CH1700 HYDRAULIC CIRCUIT (3 DECK)
T3 DUAL POWER HYD AUX CONV

DRAWN BY	APPROVED BY	FORMAT	SHEET	PULSE ID	REVISION
RMCP	N/A	A3	1 of 2		0

OPT 1

STD NO RIB OPTION

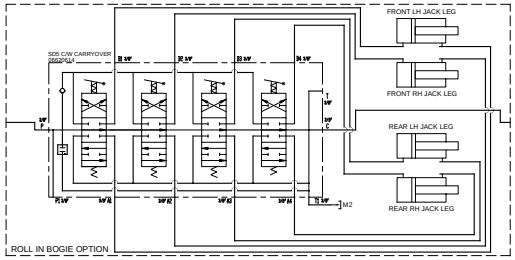

ROLL IN BOGIE OPTION

OPT 2

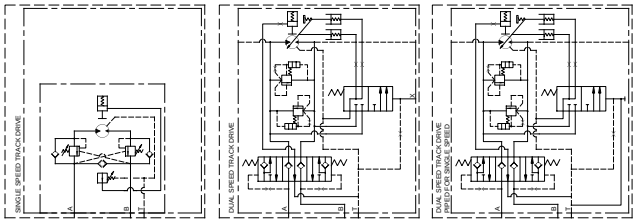

(i) Tier 4 Dual Power 2 Deck Tipping Grid Schematics

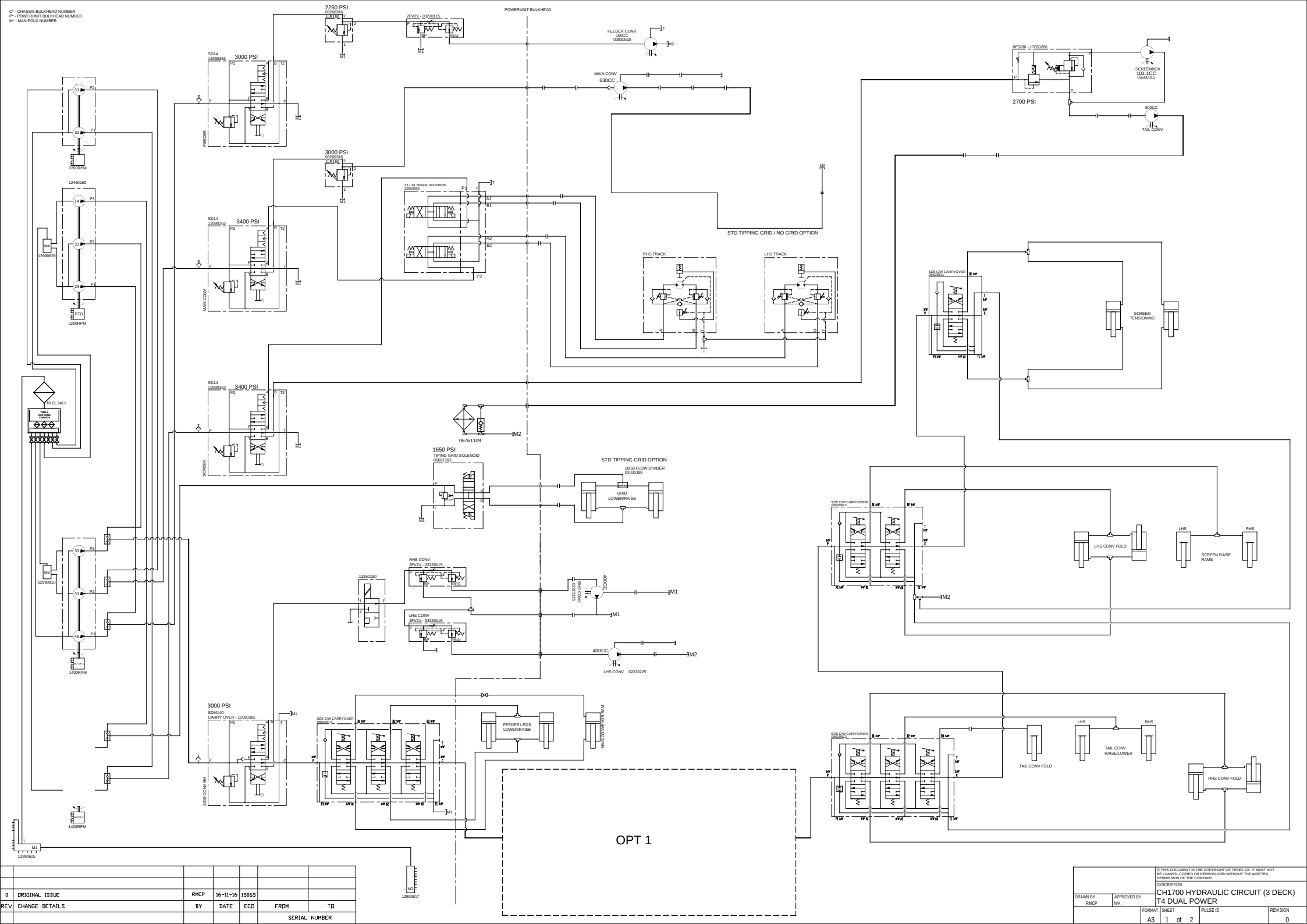

REV	DETAILS	BY	DATE	ECO	FROM	TO
0	ORIGINAL ISSUE	RMCP	16-11-16	15065		
					SERIAL NUMBER	

© THIS DOCUMENT IS THE COPYRIGHT OF TEREX GB. IT MUST NOT BE LOANED, COPIED OR REPRODUCED WITHOUT THE WRITTEN PERMISSION OF THE COMPANY.

DESCRIPTION
CH1700 HYDRAULIC CIRCUIT (3 DECK)
T4 DUAL POWER

DRAWN BY	APPROVED BY	FORMAT	SHEET	PULSE ID	REVISION
RMCP	N/A	A3	1 of 2		0

OPT 1

STD NO RIB OPTION

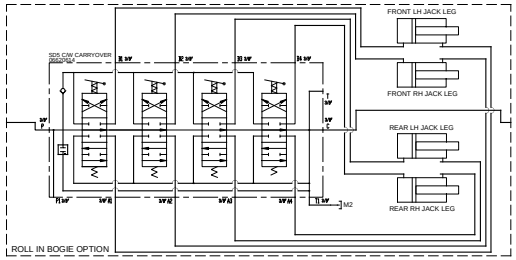

ROLL IN BOGIE OPTION

3400 PSI
234 BAR

Tracks single speed only currently

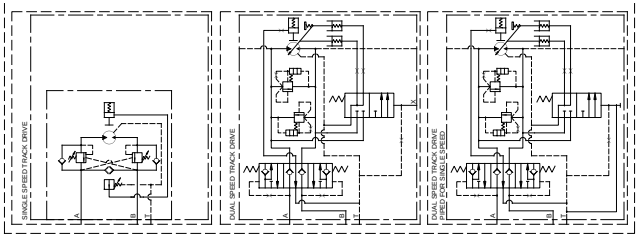

(j) Tier 4 Dual Power 3 Deck Hydraulic Auxiliary Conveyor Tipping Grid Schematics

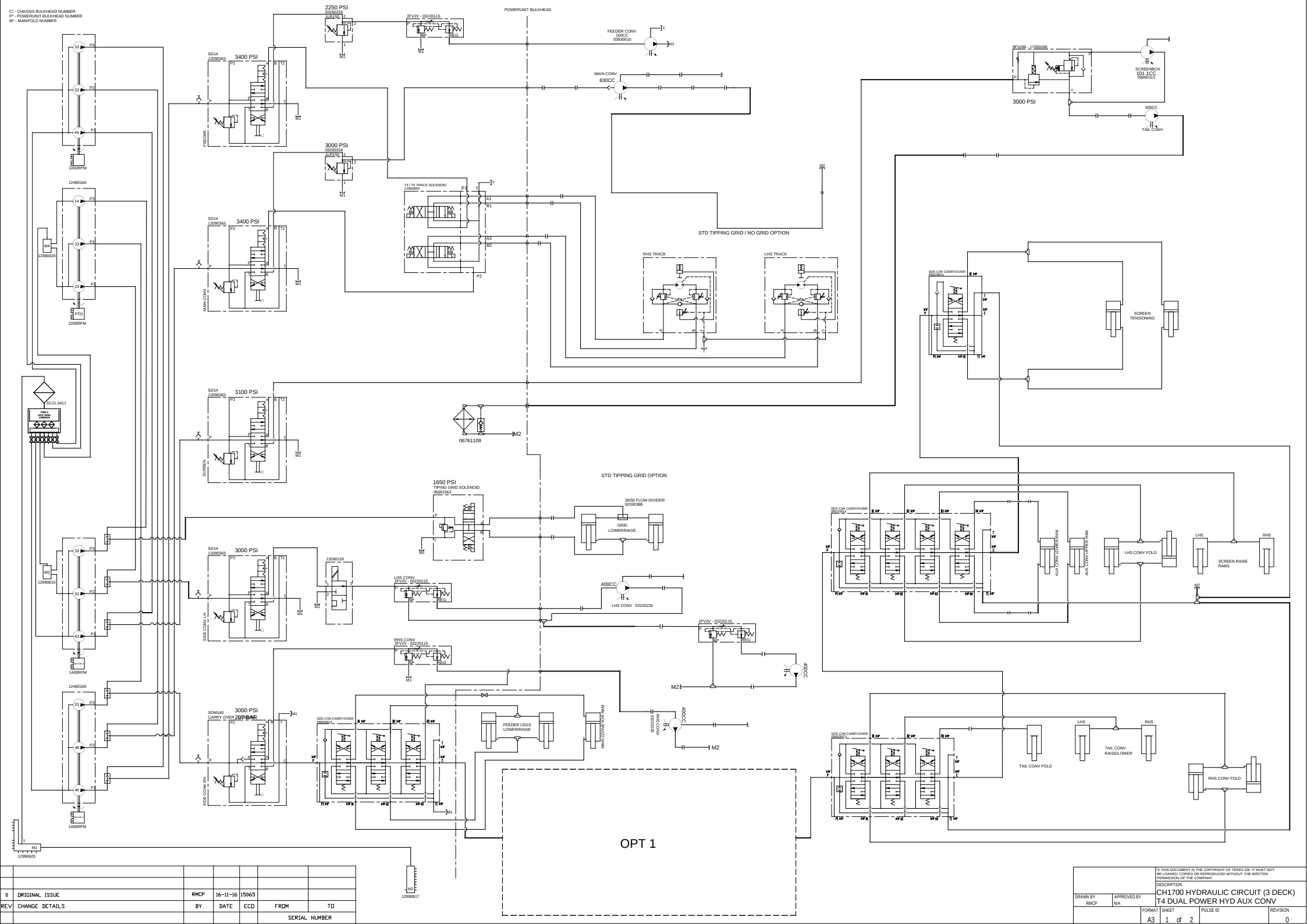

REV	CHANGE DETAILS	BY	DATE	ECO	FROM	TO
0	ORIGINAL ISSUE	RMCP	16-11-16	15065		
					SERIAL NUMBER	

© THIS DOCUMENT IS THE COPYRIGHT OF TEREX GB. IT MUST NOT BE LOANED, COPIED OR REPRODUCED WITHOUT THE WRITTEN PERMISSION OF THE COMPANY.

DESCRIPTION
CH1700 HYDRAULIC CIRCUIT (3 DECK)
T4 DUAL POWER HYD AUX CONV

DRAWN BY	APPROVED BY	FORMAT	SHEET	PULSE ID	REVISION
RMCP	N/A	A3	1 of 2		0

OPT 5

STD NO RIB OPTION

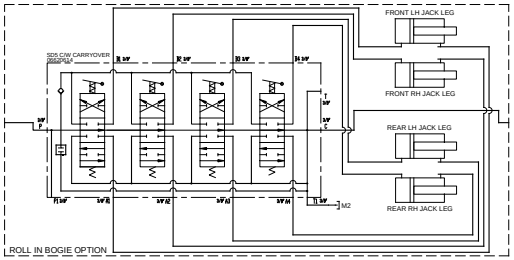

ROLL IN BOGIE OPTION

3400 PSI
234 BAR

Tracks single speed only currently

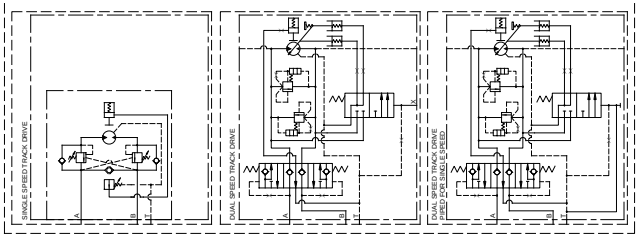

www.powerscreen.com
Email: sales@powerscreen.com

POWERSCREEN CONTACT DETAILS

Dungannon
200 Coalisland Road, Dungannon,
Co Tyrone, BT71 4DR, Northern Ireland
Tel: +44 (0) 28 87 718 500
Fax: +44 (0) 28 87 747 231

SOCIAL NETWORKING

Become a Powerscreen fan on Facebook by visiting:
www.facebook.com/powerscreenofficial

Follow Powerscreen on Twitter by visiting:
www.twitter.com/powerscreen

Follow Powerscreen on LinkedIn:
www.linkedin.com/company/powerscreen

Check out Powerscreen videos on YouTube:
www.youtube.com/powerscreen

POWERSCREEN®
A TEREX BRAND